TM 1-1520-250-10

TECHNICAL MANUAL

OPERATOR'S MANUAL
FOR
MH-60K HELICOPTER

DISTRIBUTION STATEMENT C. Distribution authorized to U.S. Government agencies and their contractors only to protect technical or operational information from automatic dissemination under the International Exchange Program or by other means. This protection applies to the publications required soley for official use and to those containing valuable technical or operational information. This determination was made on 1 April 1994. Other requests for this document will be referred to Commander: U.S. Army Aviation and Troop Command, ATTN: AMSAT-I-MT, 4300 Goodfellow Blvd., St. Louis, Missouri 63120-1798.

DESTRUCTION NOTICE. Destroy by any method that will prevent disclosure of contents or reconstruction of the document.

HEADQUARTERS, DEPARTMENT OF THE ARMY
1 JUNE 1994

WARNING

Personnel performing operations, procedures, and practices which are included or implied in this technical manual shall observe the following warnings. Disregard of these warnings and precautionary information can cause serious injury or loss of life.

BATTERY ELECTROLYTE

Battery electrolyte is harmful to the skin and clothing. If potassium hydroxide is spilled on clothing or other material, wash immediately with clean water. If spilled on personnel, immediately flush the affected area with clean water. Continue washing until medical assistance arrives. Neutralize any spilled electrolyte by thoroughly flushing contacted area with water.

CARBON MONOXIDE

When smoke, suspected carbon monoxide fumes, or symptoms of anoxia exist, the crew should immediately ventilate the cockpit.

ELECTROMAGNETIC INTERFERENCE (EMI)

No electrical/electronic devices of any sort, other than those described in this manual or appropriate airworthiness release and approved by USAATCOM AMSAT-R-ECU, are to be operated by crewmembers or passengers during operation of this helicopter.

FIRE EXTINGUISHER

Exposure to high concentrations of extinguishing agent or decomposition products should be avoided. The liquid should not be allowed to come into contact with the skin, as it may cause frost bite or low temperature burns.

HANDLING FUEL AND OIL

Turbine fuels and lubricating oils contain additives which are poisonous and readily absorbed through the skin. Do not allow them to remain on skin longer than necessary.

HIGH VOLTAGE

All ground handling personnel shall be informed of high voltage hazards when making external cargo hookups.

NOISE

Sound pressure levels in this helicopter during some operating conditions exceed the Surgeon General's hearing conservation criteria, as defined in TB MED 501. Hearing protection devices, such as the aviator helmet or ear plugs are required to be worn by all personnel in and around the helicopter during its operation. When window guns are firing, helmet and ear plugs shall be worn by all crewmembers.

WEAPONS AND AMMUNITION

Observe all standard safety precautions governing the handling of weapons and live ammunition. When not in use, point all weapons in a direction offering the least exposure to personnel and property in case of accidental firing. Do not walk in front of weapons. SAFE the machinegun before servicing. To avoid potentially dangerous situations, follow all procedural warnings in text.

ELECTROMAGNETIC RADIATION

Do not stand within sixty-six feet of the multi-mode radar (AN/APQ-174) antenna, or within six feet of the CW radar jammer (ALQ-162) and the pulse radar jammer (ALQ-136) antennas, when the equipment is on and transmitting. High frequency electromagnetic radiation can cause internal burns without causing any sensation of heat.

TABLE OF CONTENTS

REPORTING OF ERRORS

Every effort is made to keep this publication current and error free. Review conferences with using personnel, and a constant review of accident and flight test reports assure inclusion of the latest data in this publication. However, we cannot correct an error unless we know of its existence. In this regard, it is essential that you do your part. Errors, omissions, and recommendations for improving this publication by you is encouraged. Your letter or DA Form 2028-2, Recommended Changes to Publications, should be mailed to Commander, US Army Aviation and Troop Command, Attn: AMSAT-I-MP, 4300 Goodfellow BLVD., St. Louis, Mo. 63120-1798. A reply will be furnished directly to you.

Chapter & Section			Page
CHAPTER	1	INTRODUCTION	1-1
CHAPTER	2	AIRCRAFT AND DESCRIPTION AND OPERATION	2-1
Section	I	Aircraft	2-1
Section	II	Emergency Equipment	2-21
Section	III	Engines and Related Systems	2-23
Section	IV	Fuel System	2-35
Section	V	Flight Controls	2-38
Section	VI	Hydraulic and Pneumatic System	2-59
Section	VII	Powertrain System	2-65
Section	VIII	Main and Tail Rotor Groups	2-68
Section	IX	Utility Systems	2-71
Section	X	Heating, Ventilation, Cooling, and Environmental Control Unit	2-79
Section	XI	Electrical Power Supply and Distribution Systems	2-81
Section	XII	Auxiliary Power Unit	2-93
Section	XIII	Lighting	2-96
Section	XIV	Flight Instruments	2-100
Section	XV	Servicing, Parking, and Mooring	2-128
CHAPTER	3	AVIONICS	3-1
Section	I	General	3-1
Section	II	Communications	3-22
Section	III	Navigation	3-131

TABLE OF CONTENTS (Cont)

Chapter & Section			Page
Section	IV	Transponder and Radar Beacon	3-234
CHAPTER 4		MISSION EQUIPMENT	4-1
Section	I	Mission Avionics	4-1
Section	II	Armament	4-49
Section	III	Cargo Handling and Rescue Hoist Systems	4-59
Section	IV	Mission Flexible Systems	4-70
CHAPTER 5		OPERATING LIMITS AND RESTRICTIONS	5-1
Section	I	General	5-1
Section	II	System Limits	5-2
Section	III	Power Limits	5-9
Section	IV	Loading Limits	5-11
Section	V	Airspeed Limits	5-12
Section	VI	Maneuvering Limits	5-17
Section	VII	Environmental Restrictions	5-20
Section	VIII	Other Limitations	5-22
CHAPTER 6		WEIGHT/BALANCE AND LOADING	6-1
Section	I	General	6-1
Section	II	Weight and Balance	6-3
Section	III	Fuel/Oil	6-7
Section	IV	Personnel	6-16
Section	V	Mission Equipment	6-19
Section	VI	Cargo Loading	6-20
CHAPTER 7		PERFORMANCE DATA	7-1
Section	I	Introduction	7-1
Section	II	Torque Available	7-5
Section	III	Hover	7-11
Section	IV	Takeoff	7-21

TABLE OF CONTENTS (Cont)

Chapter & Section			Page
Section	V	Cruise	7-23
Section	VI	Optimum Cruise	7-134
Section	VII	Drag	7-137
Section	VIII	Climb/Descent	7-139
Section	IX	Fuel Flow	7-145
Section	X	Airspeed System Characteristics	7-147
Section	XI	Aerial Refueling	7-150
Section	XII	Single Engine Service Ceiling	7-156
CHAPTER 8		NORMAL PROCEDURES	8-1
Section	I	Mission Planning	8-1
Section	II	Operating Procedures and Maneuvers	8-3
Section	III	Instrument Flight	8-32
Section	IV	Flight Characteristics	8-33
Section	V	Adverse Environmental Conditions	8-34
Section	VI	Shipboard Operations	8-39
CHAPTER 9		EMERGENCY PROCEDURES	9-1
Section	I	Aircraft Systems	9-1
Section	II	Mission Equipment	9-23
Section	III	Warning and Caution Messages	9-31
APPENDIX A		REFERENCES	A-1
APPENDIX B		ABBREVIATIONS AND TERMS	B-1
INDEX		INDEX	INDEX-1

CHAPTER 1
INTRODUCTION

1-1. General.

These instructions are for use by the operator. They apply to MH-60K helicopters.

1-2. Warnings, Cautions, and Notes.

Warnings, cautions, and notes are used to emphasize important and critical instructions and are used for the following conditions:

WARNING

An operating procedure, practice, etc., which, if not correctly followed, could result in personal injury or loss of life.

CAUTION

An operating procedure, practice, etc., which, if not strictly observed, could result in damage to or destruction of equipment.

NOTE

An operating procedure, condition, etc., which is essential to highlight.

1-3. Description.

This manual contains the best operating instructions and procedures for the MH-60K helicopters. The primary mission of this helicopter is clandestine penetration of hostile areas at extended ranges to infiltrate armed services SOF personnel, provide logistics, reinforce and extricate forces as required. The observance of limitations, performance, and weight and balance data provided is mandatory. The observance of procedures is mandatory except when modification is required because of multiple emergencies, adverse weather, terrain, etc. Your flying experience is recognized and therefore, basic flight principles are not included. IT IS REQUIRED THAT THIS MANUAL BE CARRIED IN THE HELICOPTER AT ALL TIMES.

1-4. Appendix A, References.

Appendix A is a listing of official publications cited within the manual applicable to and available for flight crews, and fault isolation/trouble references.

1-5. Appendix B, Abbreviations and Terms.

Abbreviations listed are to be used to clarify the text in this manual only. Do not use them as standard abbreviations.

1-6. Index.

The index lists, in alphabetical order, every titled paragraph, figure, and table contained in this manual. Chapter 7 performance data has an additional index within the chapter.

1-7. Army Aviation Safety Program.

Reports necessary to comply with the safety program are prescribed in AR 385-40.

1-8. Destruction of Army Materiel to Prevent Enemy Use.

For information concerning destruction of Army materiel to prevent enemy use, refer to TM 750-244-1-5.

1-9. Forms and Records.

Army aviators flight record and aircraft inspection and maintenance records which are to be used by crewmembers are prescribed in DA PAM 738-751 and TM 1-1500-328-23.

1-10. Explanation of Change Symbols.

Changes, except as noted below, to the text and tables, including new material on added pages, are indicated by a vertical line in the outer margin extending close to the en-

tire area of the material affected: exception; pages with emergency markings, which consist of black diagonal lines around three edges, may have the vertical line or change symbol placed along the inner margin. Symbols show current changes only. A miniature pointing hand symbol is used to denote a change to an illustration. However, a vertical line in the outer margin, rather than miniature pointing hands, is utilized when there have been extensive changes made to an illustration. Changes to diagrams and schematics have shading or screening to highlight the area containing the change. Change symbols are not used to indicate changes in the following:

a. Introductory material.

b. Indexes and tabular data where the change cannot be identified.

c. Blank space resulting from deletion of text, illustration, or table.

d. Correction of minor inaccuracies such as spelling, punctuation, relocation of material, etc., unless such correction changes the meaning of instructive information and procedures.

1-11. External Tank System Configuration.

This symbol will be used throughout this manual to designate information applicable to the external tank system (ETS) configuration described in Chapter 7.

1-12. Use of Words Shall, Should, and May.

Within this technical manual the word shall is used to indicate a mandatory requirement. The word should is used to indicate a nonmandatory but preferred method of accomplishment. The word may is used to indicate an acceptable method of accomplishment.

CHAPTER 2

AIRCRAFT AND SYSTEMS DESCRIPTION AND OPERATION

Section I AIRCRAFT

2-1. General.

This chapter describes the MH-60K helicopter systems and flight controls. The functioning of electrical and mechanical components is simplified where more detailed knowledge is not necessary.

2-2. MH-60K.

The MH-60K (Figure 2-1) is a twin turbine engine, single rotor, semi-monocoque fuselage, rotary wing helicopter. With provisions for a crew of four, it carries up to twelve combat-equipped troops arranged in various configurations, and internal and external cargo. Primary mission capability of the helicopter is clandestine penetration of hostile areas at extended ranges to infiltrate armed services SOF personnel, provide logistics, reinforce and extricate forces as required. Secondary missions include training, mobilization, development of new and improved concepts, and support of disaster relief. The main rotor system has four blades made of titanium/fiberglass. The drive train consists of a main transmission, intermediate gear box, and tail rotor gear box with interconnecting shafts. The propulsion system has two T700-GE-701C engines operating in parallel. The nonretractable landing gear consists of the main landing gear and a tailwheel. Mission equipment consists of mission avionics, aircraft survivability equipment, utility systems, external auxiliary fuel, and air-to-air refueling. The armament consists of two M134 miniguns, one on each side of the helicopter in the forward cabin. Detailed descriptions of these systems are given later in this manual. The Basic Structural Maximum Gross Weight is 24,500 pounds with applicable limitations. For additional weight information, refer to Chapters 5, 6, and 7. Kit installations for the helicopter consist of range extension tanks and static/rappelling kits. Refer to Chapter 4 for kit descriptions.

2-3. Dimensions.

Principal dimensions of the helicopter are based on the cyclic stick and tail rotor pedals being centered and the collective stick being in its lowest position. All dimensions are approximate and they are as shown on Figure 2-2.

2-4. Turning Radius and Ground Clearance.

For information on turning radius and ground clearance, see Figure 2-3.

2-5. Compartment Diagram.

The fuselage is divided into two main compartments, the cockpit and cabin. The cockpit (Figure 2-4) is at the front of the helicopter with the pilots sitting in parallel; each pilot position has its own flight controls and display units. A backup instrument cluster is located in the center of the instrument panel. Operation of electrical controls are shared by both. The cabin compartment (Figure 2-5) contains space for crew chief seating, troop seating, litter installation and cargo. Restraint of cargo is by tiedown rings installed in the floor. A gust lock control, APU accumulator handpump and pressure gage, and APU ESU are also installed.

2-6. Upper and Lower Consoles.

All cockpit electrical controls are on the upper and lower consoles and instrument panel. The upper console, overhead between pilot and copilot, contains engine controls, fire emergency controls, heater and windshield wiper controls, internal and external light controls, electrical systems and miscellaneous helicopter system controls (Figure 2-6). The rear portion of the upper panel contains the dc essential bus circuit breaker panels. The lower console next to the base of the instrument panel (Figure 2-7) and extending through the cockpit between the pilot and copilot, is easily

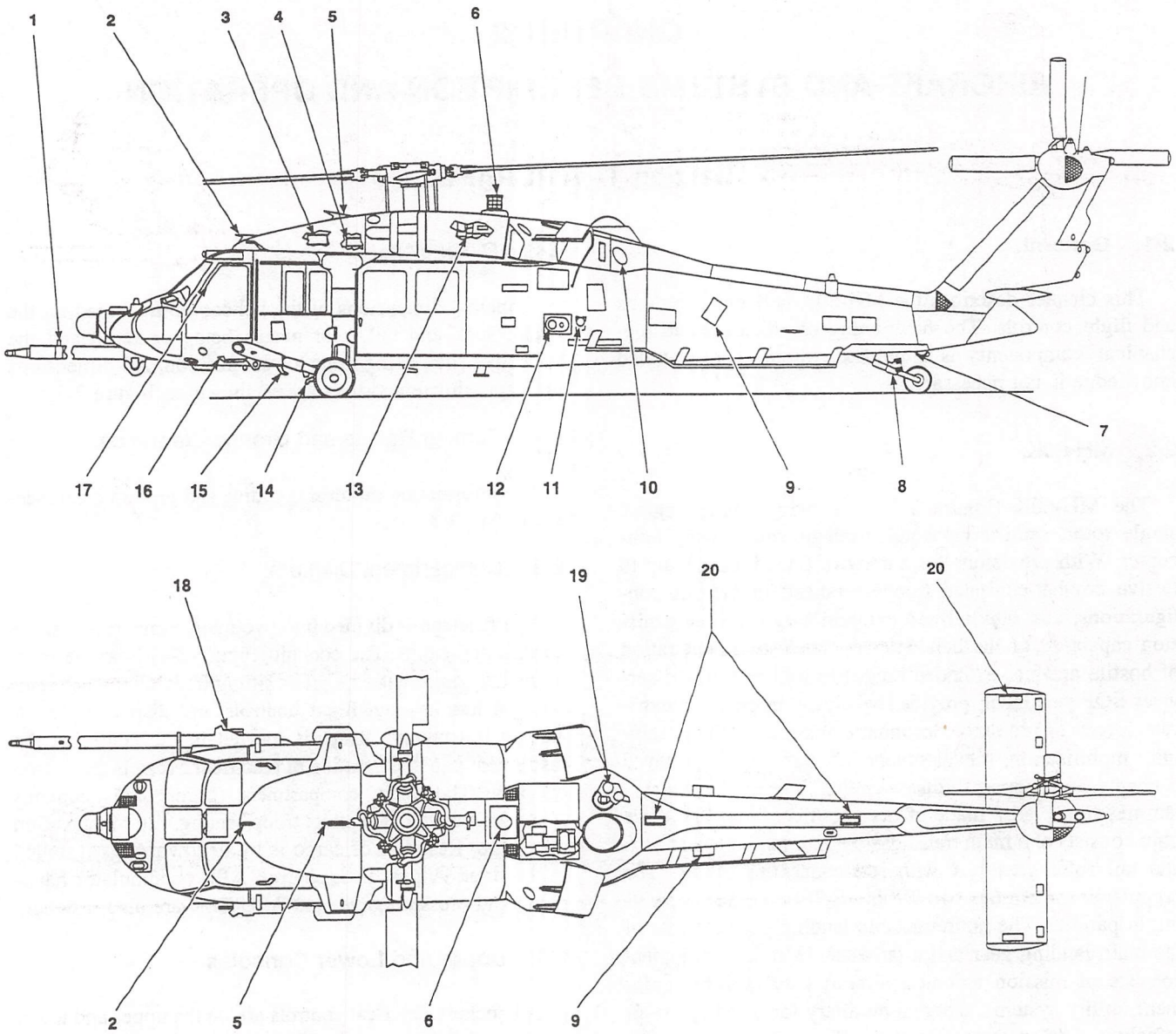

1. FUEL PROBE LOCK
2. PITOT CUTTER
3. BACKUP HYDRAULIC PUMP
4. NO. 1 HYDRAULIC PUMP AND NO. 1 GENERATOR
5. UPPER (ROTOR PYLON) CUTTER
6. INFRARED COUNTERMEASURE TRANSMITTER
7. AFT MAINTENANCE LIGHT RECEPTACLE
8. TAIL LANDING GEAR DEFLECTOR
9. CHAFF DISPENSER
10. APU EXHAUST PORT
11. PNEUMATIC PORT
12. PRESSURE AND CLOSED CIRCUIT REFUELING PORTS
13. NO. 1 ENGINE
14. MAIN LANDING GEAR DEFLECTOR / CUTTER (BOTH SIDES)
15. LANDING GEAR JOINT DEFLECTOR (BOTH SIDES)
16. STEP EXTENSION DEFLECTOR (LH SIDE ONLY)
17. DOOR HINGE DEFLECTOR (BOTH SIDES)
18. RIGHT POSITION LIGHT (GREEN)
19. FIRE EXTINGUISHER BOTTLES (INSIDE FAIRING)
20. FORMATION LIGHTS

AK0002_1
SA

Figure 2-1. General Arrangement (Sheet 1 of 3)

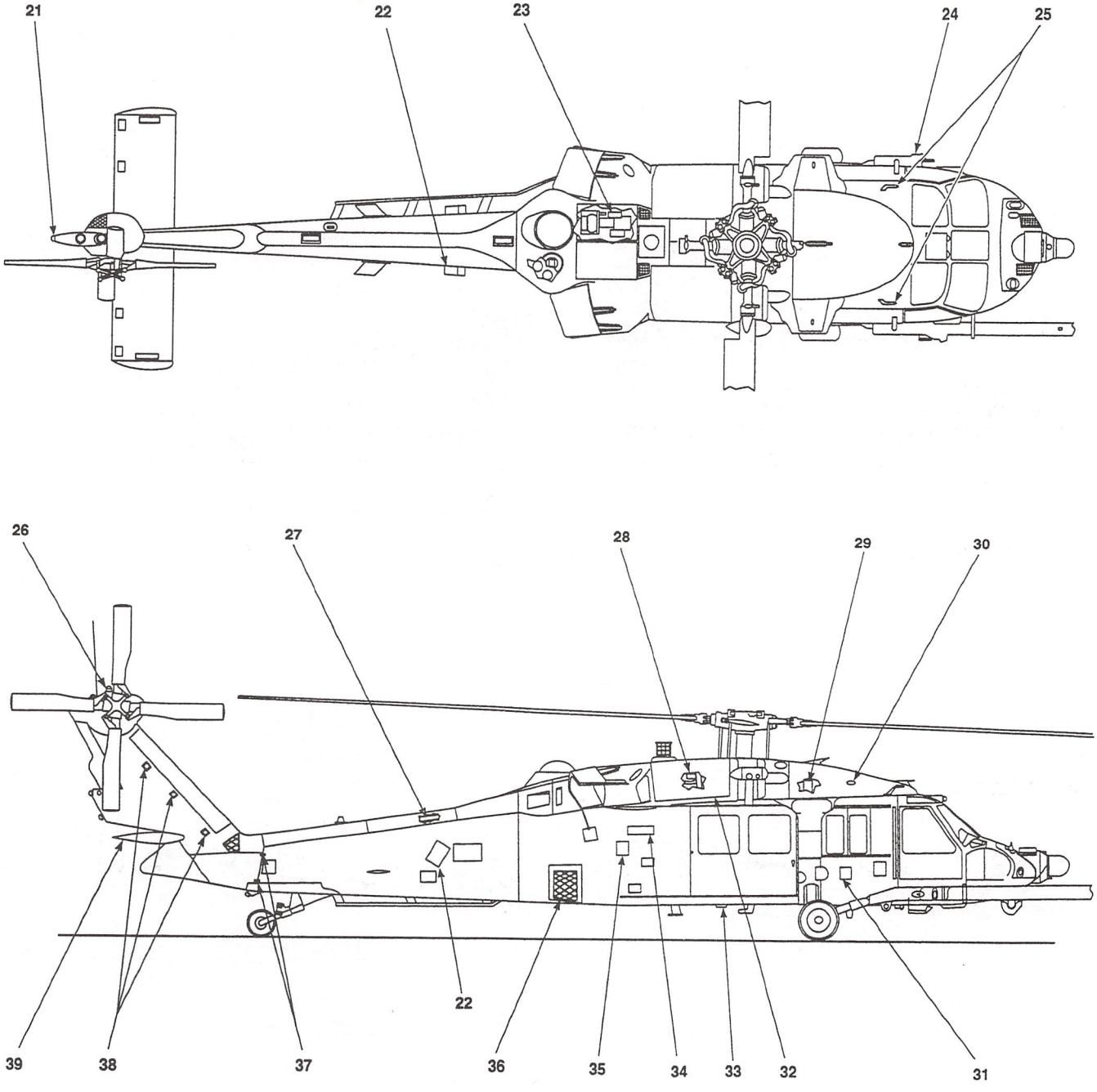

21. TAIL POSITION LIGHT (WHITE)
22. FLARE DISPENSER
23. APU
24. LEFT POSITION LIGHT (RED)
25. PITOT TUBES
26. UPPER ANTICOLLISION LIGHT
27. TAIL DRIVE SHAFT
28. NO. 2 ENGINE
29. NO. 2 HYDRAULIC PUMP AND NO. 2 GENERATOR
30. HEATER AIR INTAKE PORT
31. EXTERNAL ELECTRICAL POWER RECEPTACLE
32. ENGINE FAIRING / WORK PLATFORM (SAME BOTH SIDES)
33. HOIST SEARCHLIGHT
34. STEP
35. GRAVITY REFUELING PORT (SAME BOTH SIDES)
36. AFT AVIONICS COMPARTMENT DOOR / AIR INLET PORT
37. TAIL PYLON FOLD HINGES
38. TAIL PYLON SERVICE LADDER (SAME BOTH SIDES)
39. STABILATOR

AK0002_2
SA

Figure 2-1. General Arrangement (Sheet 2 of 3)

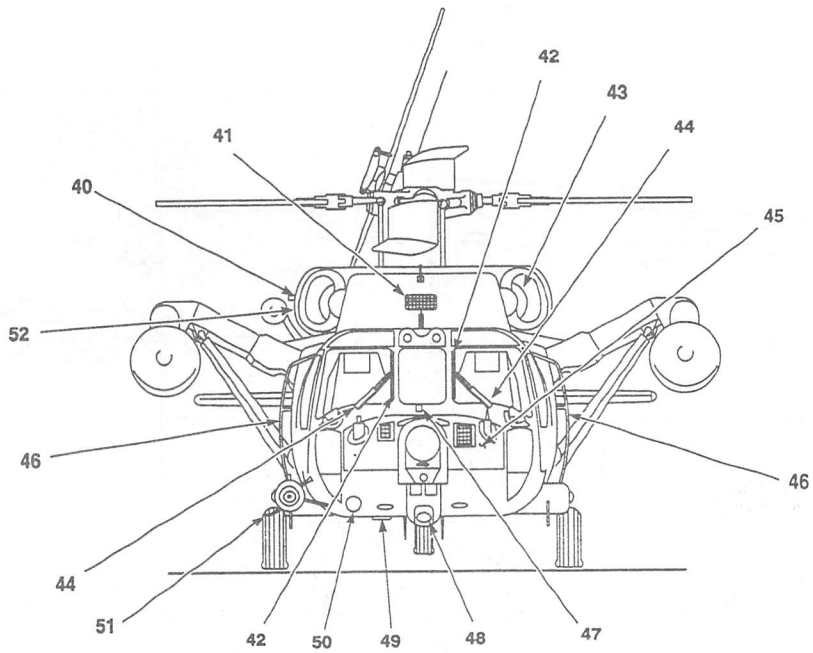

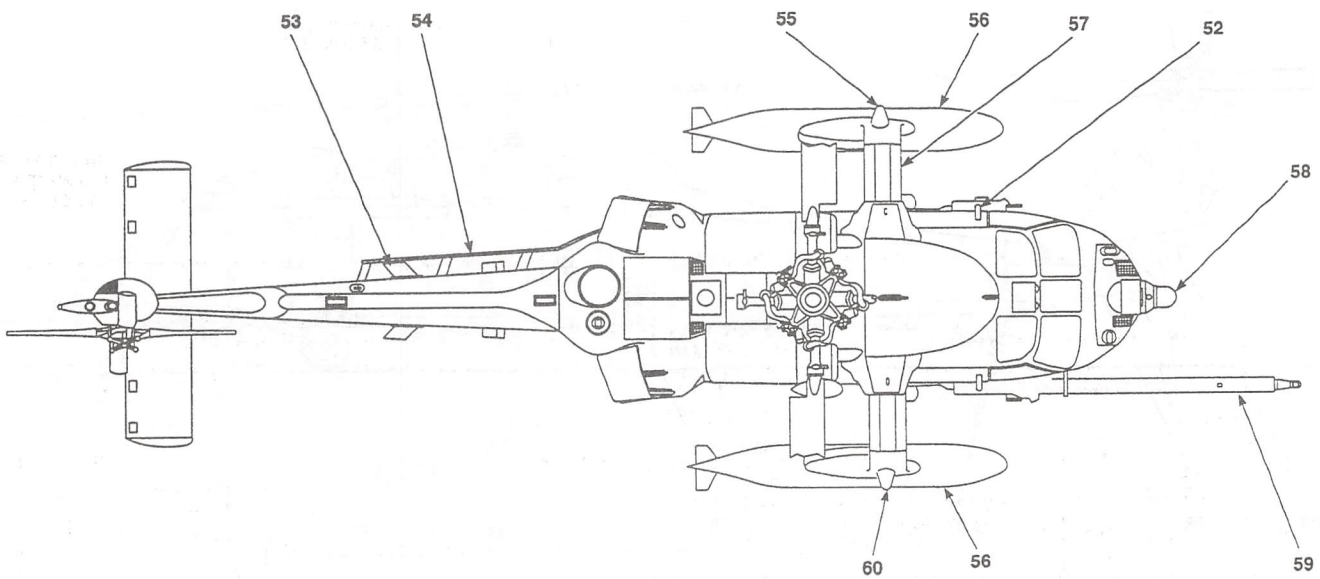

40. ICE DETECTOR
41. PYLON COOLING AIR INTAKE
42. WINDSHIELD POST DEFLECTOR
43. ENGINE BAY AREA COOLING AIR INTAKE (SAME BOTH SIDES)
44. WINDSHIELD WIPER DEFLECTOR
45. NOSE AVIONICS COMPNOSE ARTMENT
46. FM HOMING ANTENNA
47. OUTSIDE AIR TEMPERATURE (OAT) SENSOR
48. FORWARD LOOKING INFRARED (FLIR)
49. SEARCHLIGHT
50. FUEL PROBE LIGHT
51. COCKPIT STEP (BOTH SIDES)
52. AMBIENT SENSE PORT
53. VOR / ILS ANTENNA (SAME BOTH SIDES)
54. HF ANTENNA
55. LEFT POSITION LIGHT (RED)
56. EXTERNAL AUXILIARY TANK
57. EXTERNAL TANK SUPPORT (ETS)
58. MULTI-MODE RADAR (MMR)
59. AERIAL REFUELING PROBE
60. RIGHT POSITION LIGHT (GREEN)

AK0002_3 SA

Figure 2-1. General Arrangement (Sheet 3 of 3)

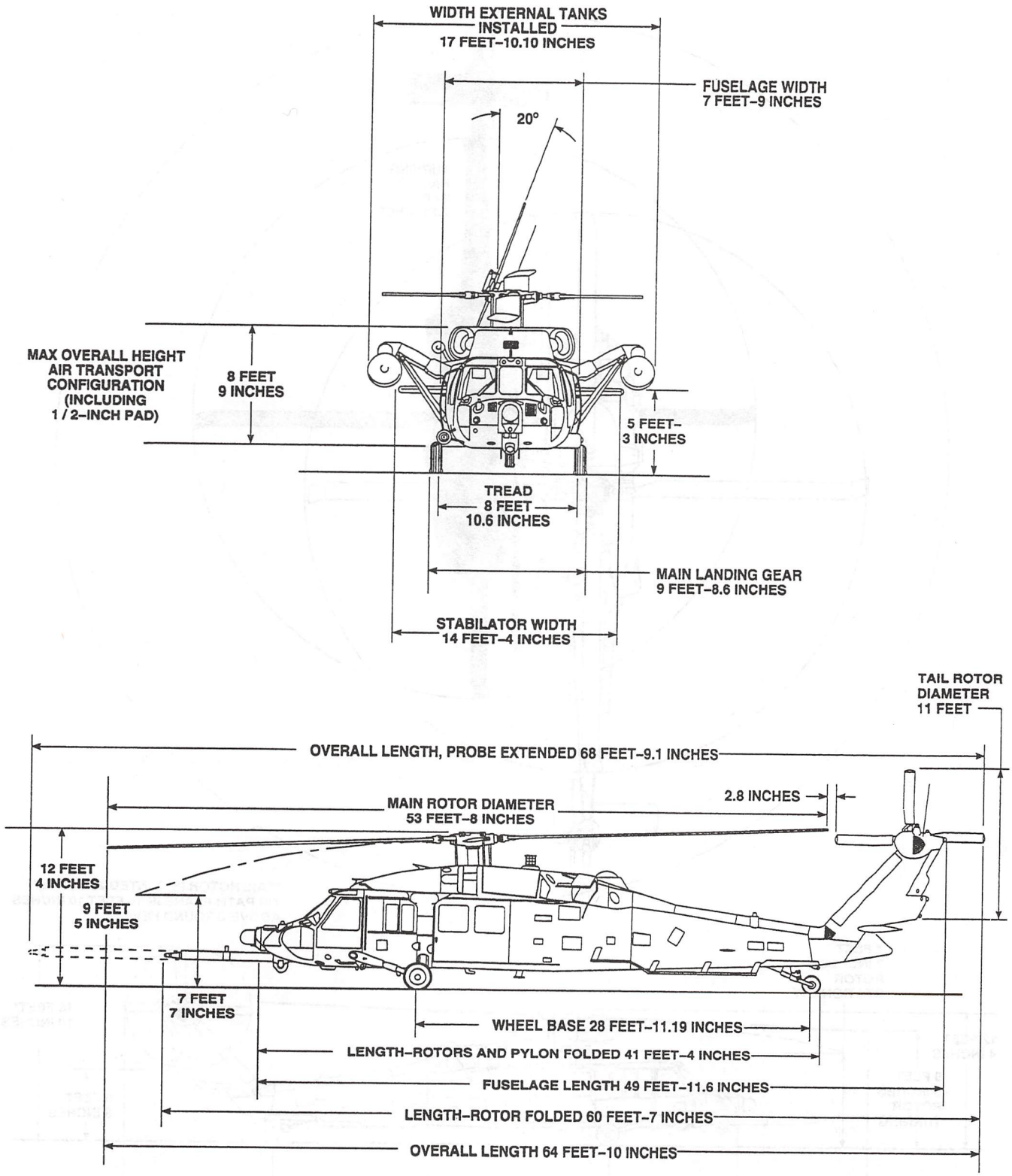

Figure 2-2. Principal Dimensions

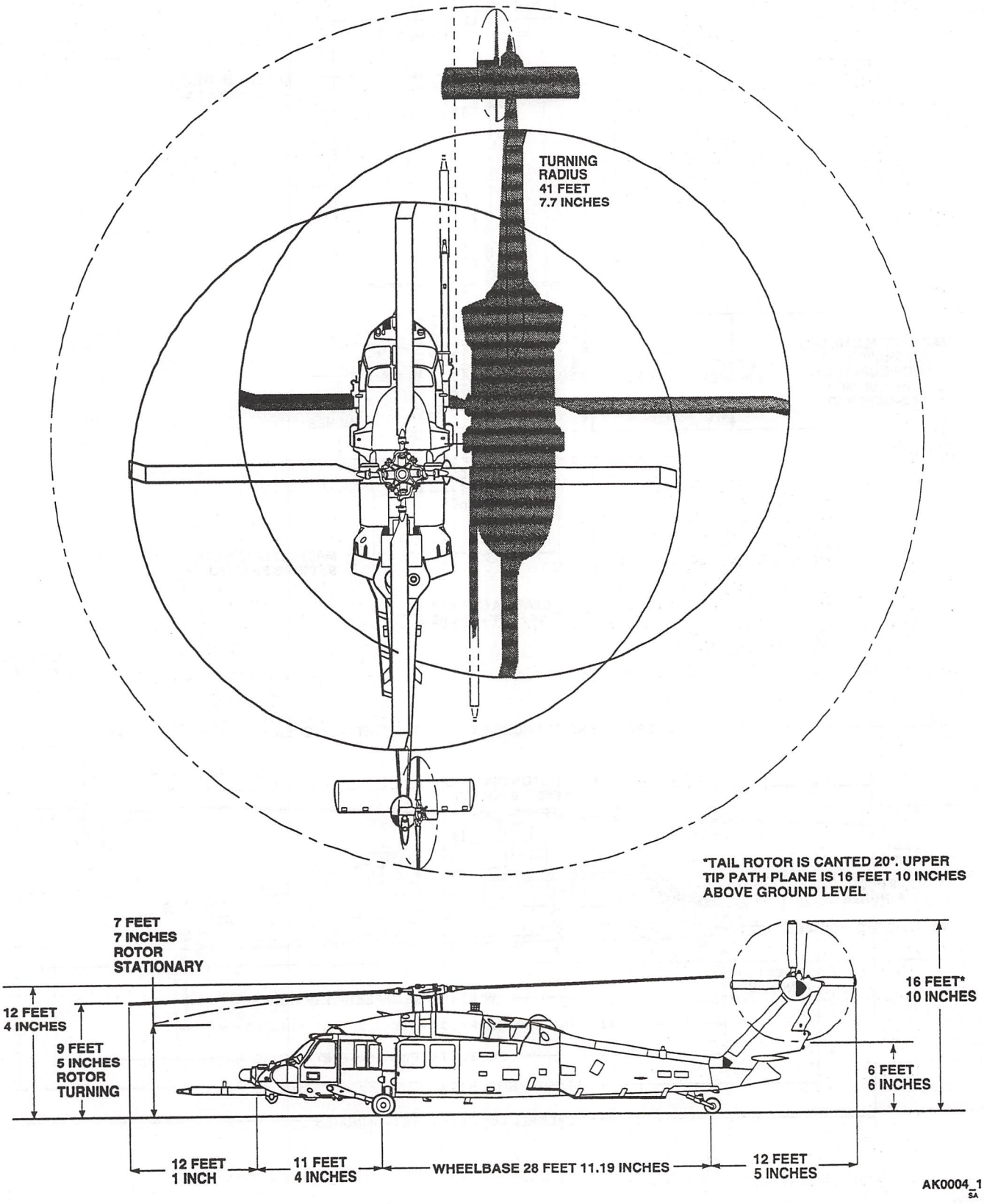

Figure 2-3. Turning Radius and Ground Clearance (Sheet 1 of 2)

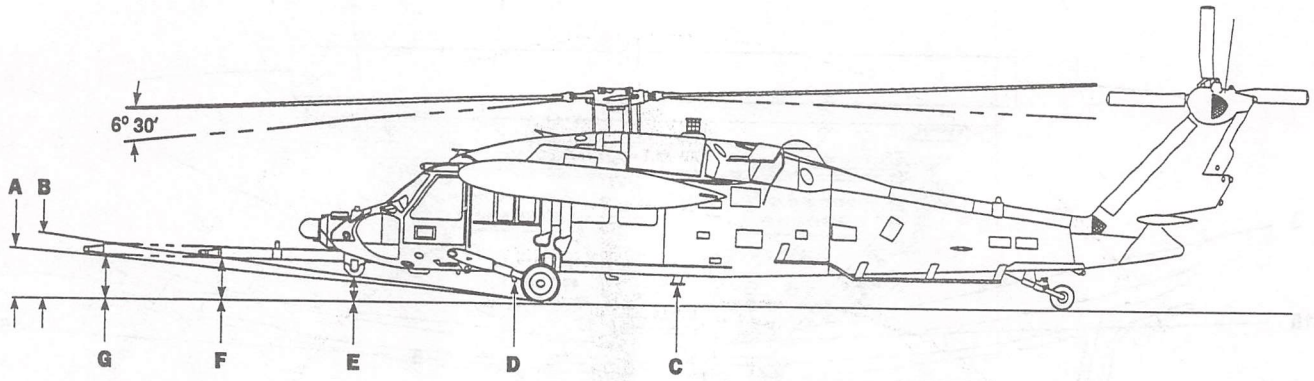

	A	B	C	D	E	F	G
AIRCRAFT WEIGHT	FUEL PROBE ANGLE EXTENDED	FUEL PROBE ANGLE RETRACTED	VHF ANTENNA	WIRE STRIKE	FLIR	FUEL PROBE RETRACTED	FUEL PROBE EXTENDED
BASIC 16825	3° 32'	5° 19'	9.52 INCHES	3.28 INCHES	11.24 INCHES	20.42 INCHES	19.82 INCHES
HIGH GROSS FORWARD CG 24500	2° 17'	3° 36'	4.27 INCHES	1.54 INCHES	5.10 INCHES	13.87 INCHES	12.84 INCHES

AK0004_2 SA

Figure 2-3. Turning Radius and Ground Clearance (Sheet 2 of 2)

reached by either pilot. The console is arranged with communication panels, navigational panels and flight attitude/stability controls. The rear part of the console houses the battery bus circuit breaker panel. Adjacent to the upper console are the rotor brake handle and auxiliary circuit breaker panel.

2-7. Landing Gear System.

The helicopter has a nonretractable landing gear consisting of two main gear assemblies and a tailwheel assembly. The landing gear permits helicopter takeoffs and landings on slopes in any direction. The system incorporates a jack and kneel feature that permits manual raising or lowering of the fuselage for air transportability. A weigth-on-wheels (WOW) switch is installed on the right landing gear drag beam to control operation of selected systems. The switch is deactivated when the weight of the helicopter is on the landing gear. A WOW switch is also installed on the left landing gear drag beam to provide ac underfrequency cut-out and to preclude external fuel tanks jettison. The right WOW switch provides all other WOW functions and redundancy for external fuel tanks jettison capabilities. Refer to Tables 2-1 and 2-2 for WOW hardwired and integrated avionics subsystem (IASS) override of WOW switch functions.

2-8. Main Landing Gear.

CAUTION

Sink rate in excess of those values in this paragraph may result in the antennas on the bottom of the fuselage contacting the landing surface.

The main landing gear is mounted on each side of the helicopter forward of center of gravity (Figure 2-1). Each individual landing gear has a single wheel, a drag beam, and a two-stage oleo shock strut. Touchdown with descent rates greater than 540 feet-per-minute on level terrain and 360 feet-per-minute on slopes/rough terrain with gross weight up to 16,825 pounds shall be avoided. Above 16,825 pounds gross weight, descent rates greater than 300 feet-per-minute on level terrain and 180 feet-per-minute on slopes/rough terrain shall be avoided. The aircraft is designed to absorb the energy in a crash condition resulting from impact up to 38 feet-per-second (about 11.0 g's) at gross weights up to 16,825 pounds. At 24,500 pounds, the equivalent energy corresponds to an impact velocity of 30

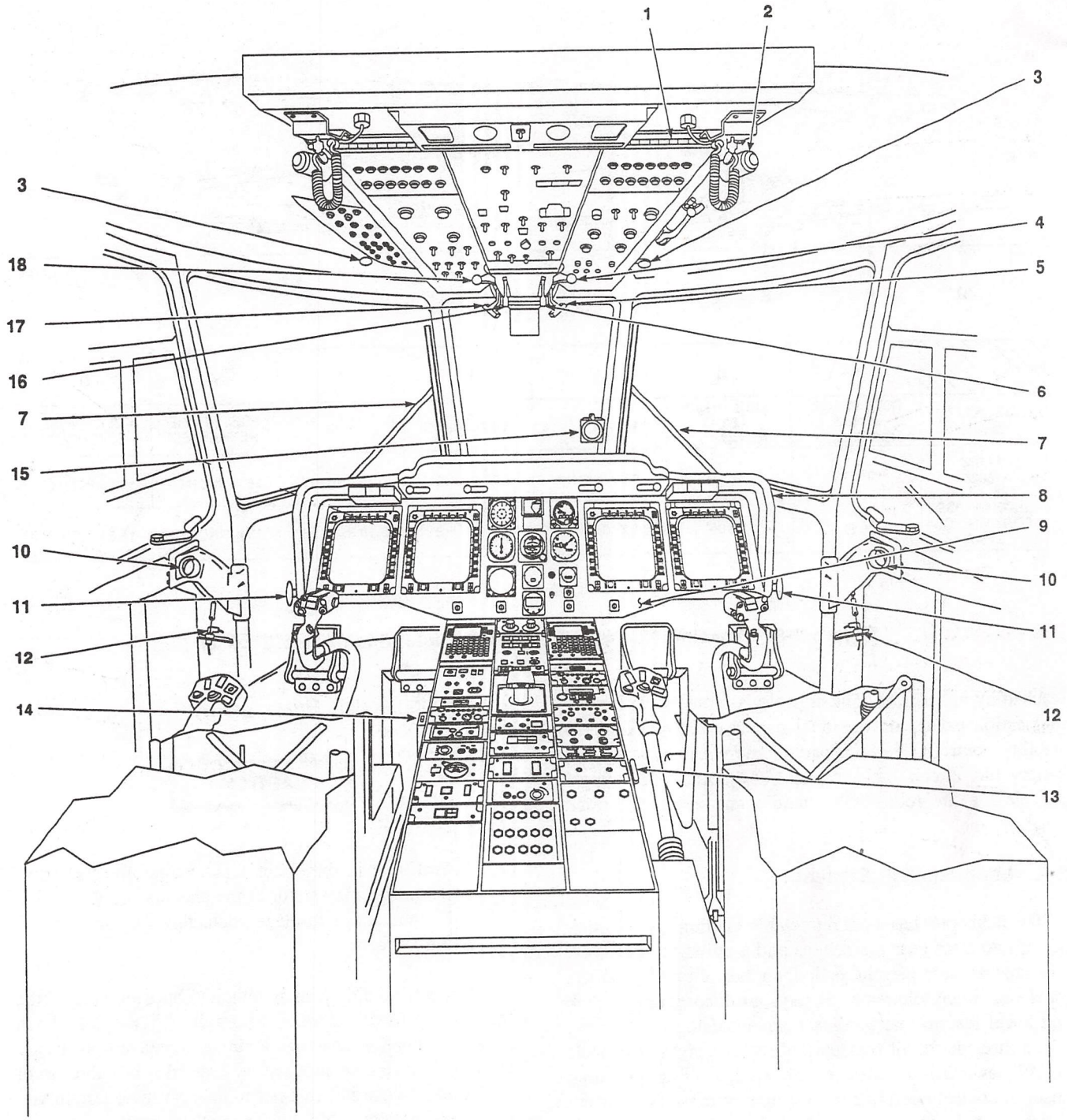

1 UPPER CONSOLE
2 PILOT'S COCKPIT UTILITY LIGHT
3 FREE-AIR TEMPERATURE GAGE
4 NO. 2 ENGINE FUEL SELECTOR LEVER
5 NO. 2 ENGINE OFF / FIRE T-HANDLE
6 NO. 2 ENGINE POWER CONTROL LEVER
7 WINDSHIELD WIPER
8 INSTRUMENT PANEL GLARE SHIELD
9 INSTRUMENT PANEL
10 VENT / DEFOGGER
11 PEDAL ADJUST LEVER
12 JETTISON QUICK DISCONNECT (AVR-2)
13 PARKING BRAKE LEVER
14 NULL ACCEL SWITCH
15 STANDBY (MAGNETIC COMPASS)
16 NO. 1 ENGINE POWER CONTROL LEVER
17 NO. 1 ENGINE OFF / FIRE T-HANDLE
18 NO. 1 ENGINE FUEL SELECTOR LEVER

AK0005_1
SA

Figure 2-4. Cockpit Diagram (Sheet 1 of 2)

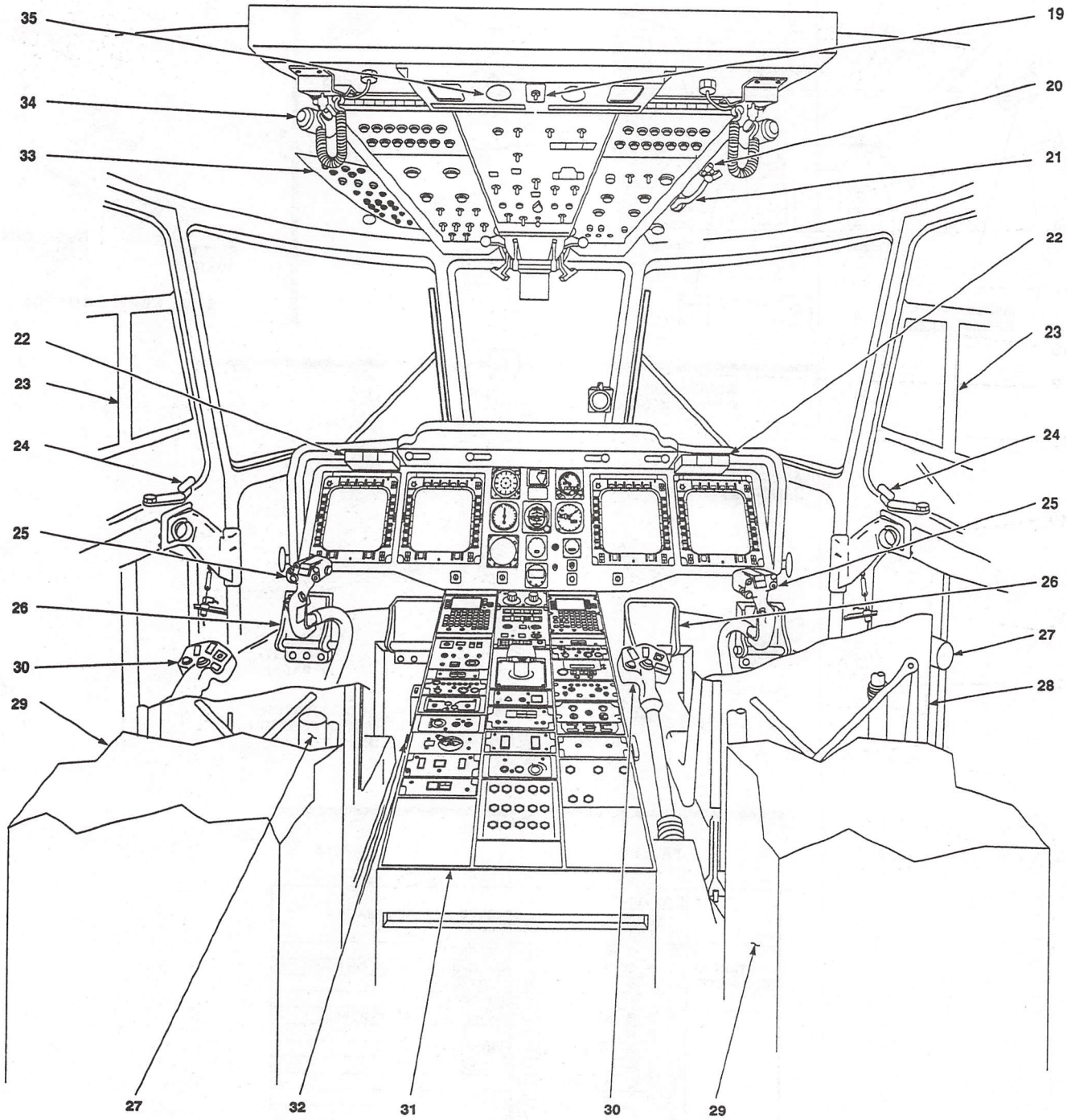

19 COCKPIT FLOODLIGHT CONTROL
20 ROTOR BRAKE MASTER CYLINDER
21 ROTOR BRAKE HANDLE
22 MASTER WARNING PANEL
23 SLIDING WINDOW
24 COCKPIT DOOR EMERGENCY RELEASE
25 CYCLIC STICK
26 DIRECTIONAL CONTROL PEDALS
27 M43 BLOWER (IF INSTALLED)
28 PILOT'S SEAT
29 AVIONICS RACK
30 COLLECTIVE STICK GRIP
31 LOWER CONSOLE
32 ENGINE IGNITION KEYHOLE
33 COPILOT AUXILIARY CIRCUIT BREAKER PANEL
34 COPILOT'S COCKPIT UTILITY LIGHT
35 COCKPIT FLOODLIGHTS

AK0005_2
SA

Figure 2-4. Cockpit Diagram (Sheet 2 of 2)

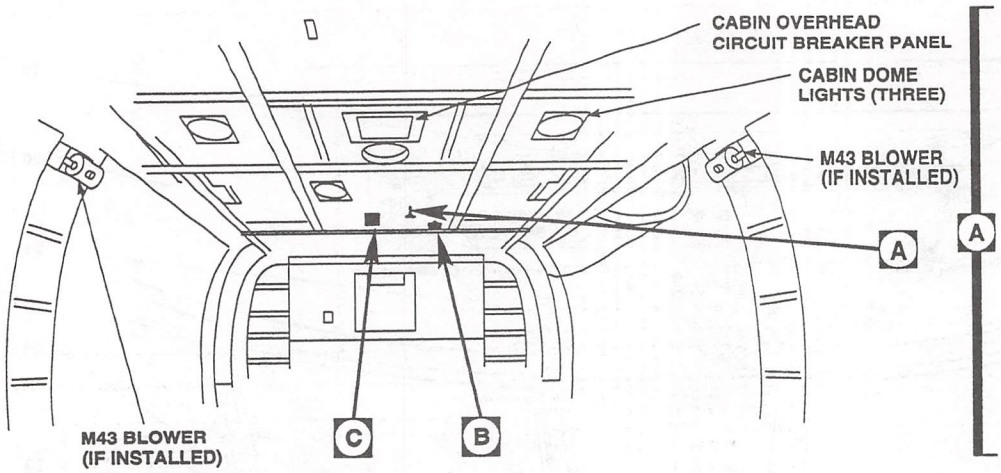

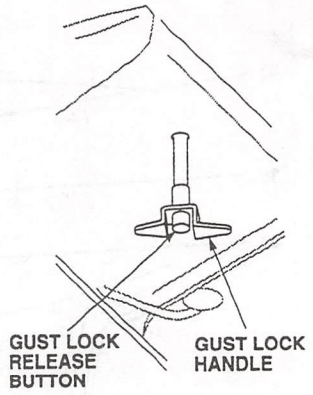

GUST LOCK CONTROL

B

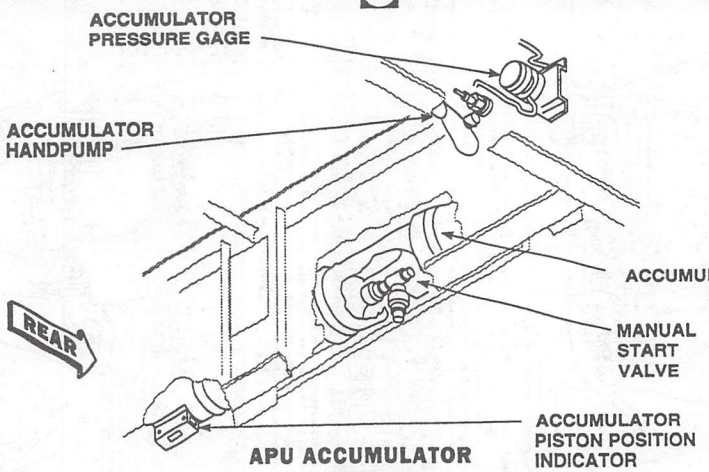

APU ACCUMULATOR
(LOOKING UP)

C

FAULT INDICATION

FAULTS

	GTC–P36–150 BITE # 1 2 3 4	DECODED BITE INFORMATION
START SEQUENCE	● ● ● ●	RESET (START INITIATED)
	○ ● ● ●	FUEL VALVE AND IGNITION SIGNAL ON (5%)
	○ ○ ● ●	START VALVE SIGNAL OFF (70%)
	○ ○ ○ ●	IGNITION SIGNAL OFF (95%)
OPERATION	● ● ● ●	READY FOR SERVICE (LOSS OF DC POWER)
	○ ● ● ●	ESU FAILURE
	● ○ ● ●	A / C START SYSTEM FAILURE
	○ ○ ● ●	OVERTEMPERATURE
	● ● ○ ●	OVERSPEED
	○ ● ○ ●	UNDERSPEED
	● ○ ○ ●	FAIL TO START
	○ ○ ○ ●	LOW OIL PRESSURE
	● ● ● ○	OIL PRESSURE SWITCH FAILED
	○ ● ● ○	THERMOCOUPLE FAILED
	● ○ ● ○	MONOPOLE FAILED
	● ● ○ ○	FUEL SOLENOID FAILED
	● ○ ○ ○	FUEL TORQUE MOTOR FAILED
	○ ○ ● ○	IGNITION UNIT FAILED
	○ ● ○ ○	HOT SENSOR FAILED
	○ ○ ○ ○	NO DATA

APU ELECTRONIC SEQUENCE UNIT FAULT INDICATION

AK0006
SA

Figure 2-5. Cabin Interior

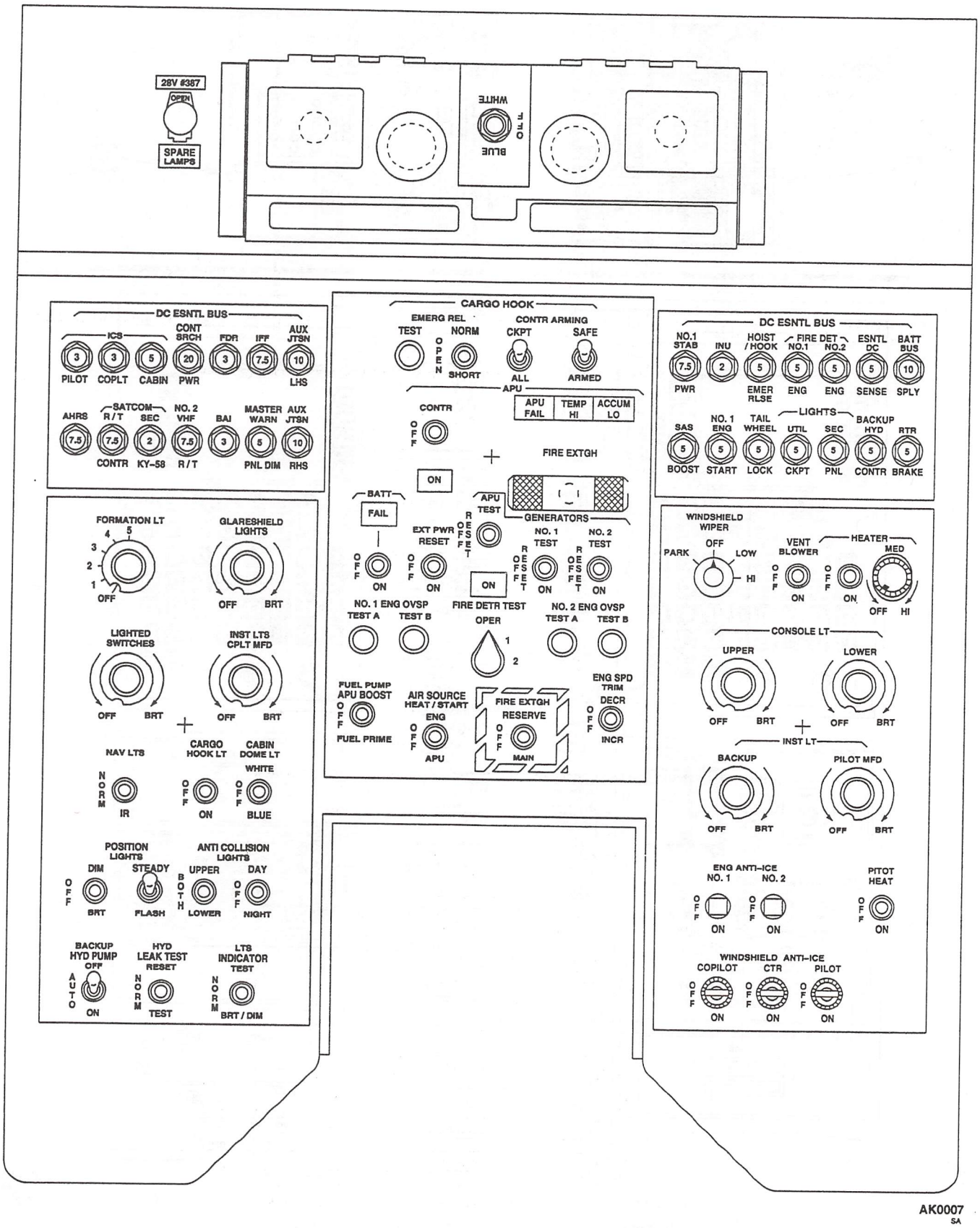

AK0007
SA

Figure 2-6. Upper Console

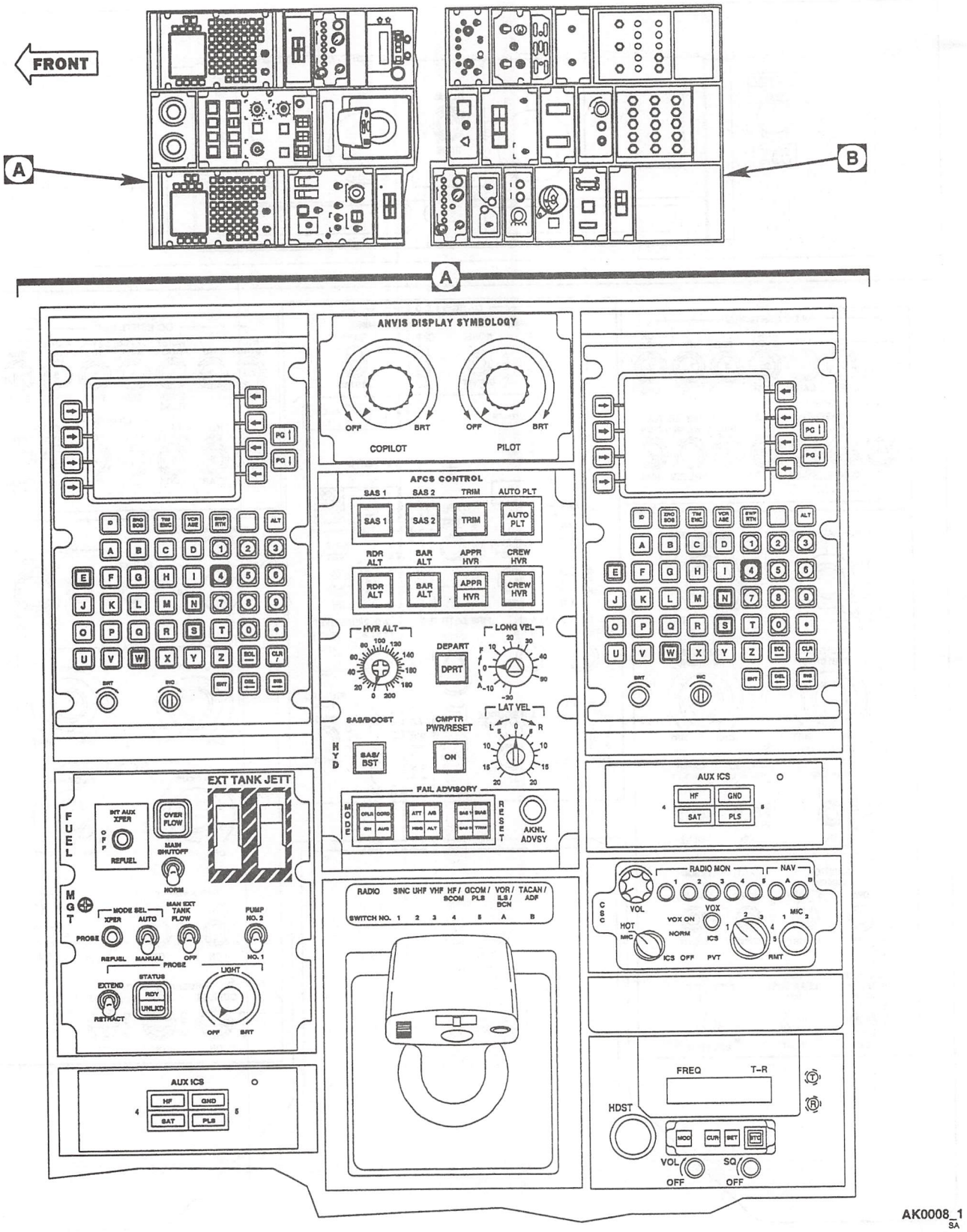

AK0008_1
SA

Figure 2-7. Lower Console (Sheet 1 of 2)

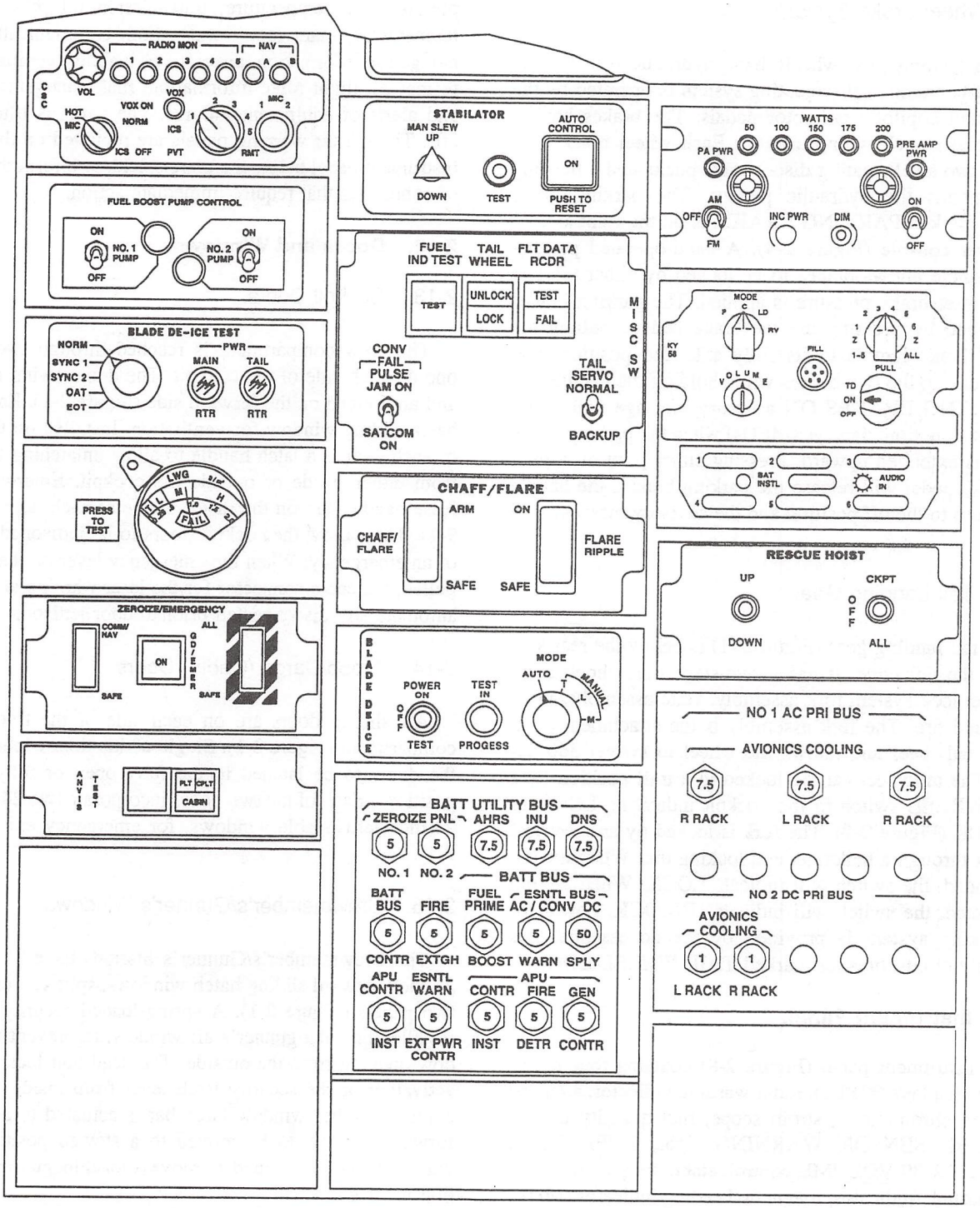

AK0008_2
SA

Figure 2-7. Lower Console (Sheet 2 of 2)

feet-per-second. This energy is absorbed through a combination of landing gear stroking and deformation of structure.

2-9. Wheel Brake System.

Main landing gear wheels have hydraulic disc brakes. The self-contained self-adjusting system is operated by the pilot's and copilot's tail rotor pedals. The brakes have a visual brake puck wear indicator. Each wheel brake consists of two steel rotating discs, brake pucks and a housing that contains the hydraulic pistons. The parking brake handle, marked PARKING BRAKE, is on the right side of the lower console (Figure 2-4). A hand-operated parking brake handle allows brakes to be locked by either pilot or copilot after brake pressure is applied. The parking brakes are applied by pressing the toe brake pedals, pulling the parking brake handle to its fully extended position, and then releasing the two brakes while holding the handle out. A PARKING BRAKES ON advisory message will be on the multi-function displays (MFDs) when the parking brake handle is extended upward. Pressing either pilot or copilot left brake pedal will release the parking brakes, the handle will return to the off position and the advisory message will go off.

2-10. Tail Landing Gear.

The tail landing gear (Figure 2-1) is below the rear section of the tail cone. It has a two-stage oleo shock strut, tailwheel lock system fork assembly, yoke assembly, and a wheel and tire. The fork assembly is the attachment point for the tailwheel and allows the wheel to swivel 360 degrees. The tailwheel can be locked in a trail position by a TAIL WHEEL switch in the cockpit indicating LOCK or UNLOCK (Figure 2-7). The fork is locked by an electrical actuator through a bellcrank and locking pin. When the pin is extended, the switch will indicate LOCK. When the pin is retracted, the switch will indicate UNLOCK. Power for the locking system is provided by the dc essential bus through a circuit breaker marked TAIL WHEEL LOCK.

2-11. Instrument Panel.

The instrument panel (Figure 2-8) contains four multifunction displays (MFDs), radar warning indicator, airspeed indicator, chronometer, strom scope, fuel quantity indicator, FUEL SENSOR WARNING light, FUEL XFER switch, APR-39 VOLUME control, stabilator position indicator, attitude indicator, magnetic heading indicator (MHI), radar altimeter, barometric altimeter, and two master warning panels and dimmer controls. MFDs are the primary instrument panel device used by the pilots. Each MFD is capable of displaying engine performance data, engine oil pressure and temperature, transmission oil pressure and temperature, main rotor information, communication and navigation information, aircraft survivability equipment information, flight route information, fuel management data, and alerts of equipment failures. The panel is tilted back 30°. The master warning panels are mounted on the upper instrument panel below the glare shield, to inform the pilots of conditions that require immediate action.

2-12. Doors and Windows.

2-13. Cockpit Doors.

The crew compartment is reached through two doors, one on each side of the cockpit. The doors swing outward and are hinged on the forward side (Figure 2-1). Each door has a sliding window for ventilation. Installed on the back of each door is a latch handle to allow unlatching the door from either inside or outside the cockpit. Emergency release handles are on the inside frame of each door (Figure 9-1). They allow the cockpit doors to be jettisoned in case of an emergency. When the emergency lever on the door is pulled, the cable connector for the laser warning antenna is automatically disconnected prior to door jettison.

2-14. Troop/Cargo (Cabin) Doors.

Aft sliding doors are on each side of the troop/cargo compartment (Figure 2-1). Single-action door latches allow the doors to be latched in the fully open or fully closed positions. Each of the two doors incorporate two 24-inch by 24-inch jettisonable windows, for emergency exit (Figure 9-1).

2-15. Crewmember's/Gunner's Windows.

The Crewmember's/Gunner's Stations have 24-inch by 24-inch forward sliding hatch windows, split vertically into two panels (Figure 2-1). A spring-loaded security latch is installed on each gunner's aft window, to prevent the window opening from the outside. The dead bolt lock requires activation of the security latch lever from inside the helicopter. Another window latch bar is actuated to allow the forward window to be moved to a stowed position. The windows may be opened to move a machinegun into position for firing.

Table 2-1. Weight-On-Wheels Functions (Hardwired)

WOW SWITCH FUNCTION	FLIGHT *	GROUND	LOCATION
AHRS ground alignment	Disabled	Enabled	Right
AFCS computer integrators****	Enabled	Disabled	Right
AFCS ground test functions****	Disabled	Enabled	Right
Generator control underfrequency protection	Disabled	Enabled	Left
Cargo hook emergency release	Enabled	Enabled	Right
Rescue hoist shear	Enabled	Disabled	Right
Hydraulics HYD LDI test	Disabled	Enabled	Right
Thermal protection/Backup pump	Disabled	Enabled	Right
IFF transponder Mode 4	Enabled	Disabled	Right
VWS (Voice Warning System)			
Engine out	Enabled	Enabled	Right
Low rotor rpm	Enabled	Disabled	Right
Stabilator	Enabled	Enabled	Right
Refueling probe extension	Enabled	Disabled**	Right
External tanks jettison	Enabled	Disabled	Both
M-130	Enabled	Disabled	Right
CW jammer	Enabled	Disabled	Right
Pulse jammer	Enabled	Disabled	Right
FLIR (servo disable switch)	Enabled	Disabled	Right
MMR***	Enabled	Disabled	Right
Chronometer	Enabled	Disabled	Right

2-16. Crew Seats.

2-17. Pilot's and Copilot's Seating.

WARNING

Do not store any items underneath seats. During a crash any obstruction will increase the probability and severity of injury.

The pilot's and copilot's seats provide ballistic protection and can be adjusted for the pilot's leg length and height. The pilot's seat is on the right side, and the copilot's is on the left. Each seat has a one-piece steel/Kevlar armored bucket attached to six energy absorption elements. Crash loads are reduced by allowing the seat and occupant to move in the direction of the crash as a single unit. Four rollers, two in each rail guide, are individually adjustable to provide optimum clearance between the seat rail guides and floor rails for smoothest fore and aft seat adjustment.

a. Seat Height Adjustment. When the seat height adjustment lever is pulled forward, the seat can move vertically through 5 inches and be locked at any 1/2-inch interval. Springs are installed to counterbalance the weight of the seat. The lever returns to the locked position when released.

b. Forward and Rear Adjustment. Seat forward and rear adjustment lever allows the seat to be moved 5 inches. The seat can be locked at any 5/8-inch interval.

Table 2-1. Weight-On-Wheels Functions (Hardwired) (Cont)

WARNING

When maintenance is being performed with WOW switches wedged, adhere to all WARNINGS and CAUTIONS within the descriptive areas of this manual for those systems in Table 2-1. Serious injury to personnel could occur from HF, MMR, and/or radar jammers radiations. Personal injury or aircraft damage could occur from accidental chaff/flare launching, fuel tanks jettison, or cable shearing. Circuit breakers for systems not being tested should be pulled.

Ensure wedge is removed after ground simulation of flight mode conditions. Some systems can cause serious injury to ground personnel or aircraft damage if intentionally or unintentionally activated.

NOTES: (*) To simulate flight mode conditions while on the ground, except for generator underfrequency and external tanks jettison, the right side WOW landing gear switch must be wedged.

(**) When aircraft has weight-on-wheels and the FUEL MGT panel PROBE control switch is at the RETRACT position, the WOW switch will keep the probe valve closed; therefore, preventing probe extension while pressure refueling from the side port.

(***) The MMR is not actually hardwired to the right side WOW switch; however, it cannot be activated while the aircraft has weight-on-wheels without wedging the WOW switch.

(****) Enable the following AFCS functions while on the ground and the WOW switches are not wedged.

1. Ground test or preflight mode can be entered.
2. Pedal switch actuation causes yaw trim release.
3. Disengages pitch and roll autopilot; put pitch, roll, yaw, and collective outer loop integrators in hold; and disengages heading hold.
4. Disables barometric altitude and radar sensor activity tests.
5. Allows vertical accelerometer range testing.
6. Enables the AFCS CONTROL panel switch capsules to echo the corresponding switch displacement (i.e., the switch capsule will illuminate as long as the corresponding switch is held depressed, regardless of whether or not the respective mode is engaged.

c. Seat Belts. The common attachment buckle has a single-point release mechanism with a strap attached. When this strap is pulled up, it simultaneously releases all belts and harness.

d. Shoulder Harness Lock Lever. A two position harness inertia reel lock lever is on the left side of each seat. When the lever is in the aft (unlocked) position, the dual shoulder harness will extend 12 inches to allow occupant to lean forward. The inertia reel will automatically lock if a sudden force of 3 g's is encountered, allowing only harness retraction. When this occurs, the inertia reel lock will prevent further extension until the lever is cycled. When the lever is placed in the locked (forward) position, the reel lock prevents extension of the harness.

2-18. Protective Armor.

Armor protection is provided for the body of the pilot and copilot against 7.62 mm rounds or projectiles from the side and from the back and below. Armored wings, attached to the cockpit interior, consist of a sliding panel at the outboard side of each seat. A release lever at the front of each panel permits sliding the panel aft to allow rapid entrance and exit, as well as freedom of movement for the seat occupant.

Table 2-2. Weight-On-Wheels Functions (IASS Override)

SYSTEM	FUNCTION	MFD KEY WOW OVERRIDE OFF	MFD KEY WOW OVERRIDE ON
FLIR	Boresight	Enabled	Disables
MMR*	Operate	Disabled	Disables
CW jammer*	Operate transmitter	Disabled	Enables
Pulse jammers*	Operate transmitter	Disabled	Enables
HF radio*	Maintenance tune	CH 1-10	CH 11-20
IFF*	Mode 4 hold	Disabled	Enables
AHRS*	Flyover update	Disabled	Enables
	Air align	Disabled	Enables
	Ground align	Enabled	Disables
INU	Air align	Disabled	Enables
	Ground align	Enabled	Disables
	F02 correction data source	GPS	Doppler or GPS
Tone warning	All except alarm clock	Disabled	Enables
Flight director	DHOV/GA mode	Disabled	Disables
Special CDU layers	Maintenance test access	Enabled	Disables

NOTE: (*) Right side landing gear WOW switch must be wedged to enable system when MFD WOW key is toggled to ON. If the WOW switch is not wedged, limited IASS software functions and screens are available.

2-19. Crew Chief/Gunner Seats.

WARNING

Do not store any items underneath seats. During a crash any obstruction will increase the probability and severity of injury.

Two outward facing seats (Figure 2-23), one on each side of the helicopter at the front of the cabin, are for the crew chief/gunners. Each seat faces a window. Each seat is a cable-supported steel tube assembly with a fire-resistant, high strength fabric seat and backrest. Each seat contains two lower energy attenuators designed and oriented to reduce personal injury in a crash. Each seat has a complete lap belt and dual torso-restraint shoulder harness attached to a dual action rotary release buckle. The common attachment buckle has a single-point release marked TURN. When turned, it simultaneously releases all belts and straps. The shoulder harness is connected to inertia reels on the seat back and bottom. This gives the wearer freedom to move about his station. On helicopters equipped with improved crew chief/gunner's restraint system, the restraint system is equipped with a single action rotary release buckle with a guard. A release plate must be pressed to allow rotation of release, preventing inadvertent handle rotation from contact with equipment, etc. The inertia reel lock control is replaced by a shorter push/pull manual locking control. Push in and the inertia reel is manually locked in place. When the control is pulled out, the reel will lock on sudden pull.

2-20. Troop Provisions.

WARNING

Do not store any items underneath seats. During a crash any obstruction will increase the probability and severity of injury.

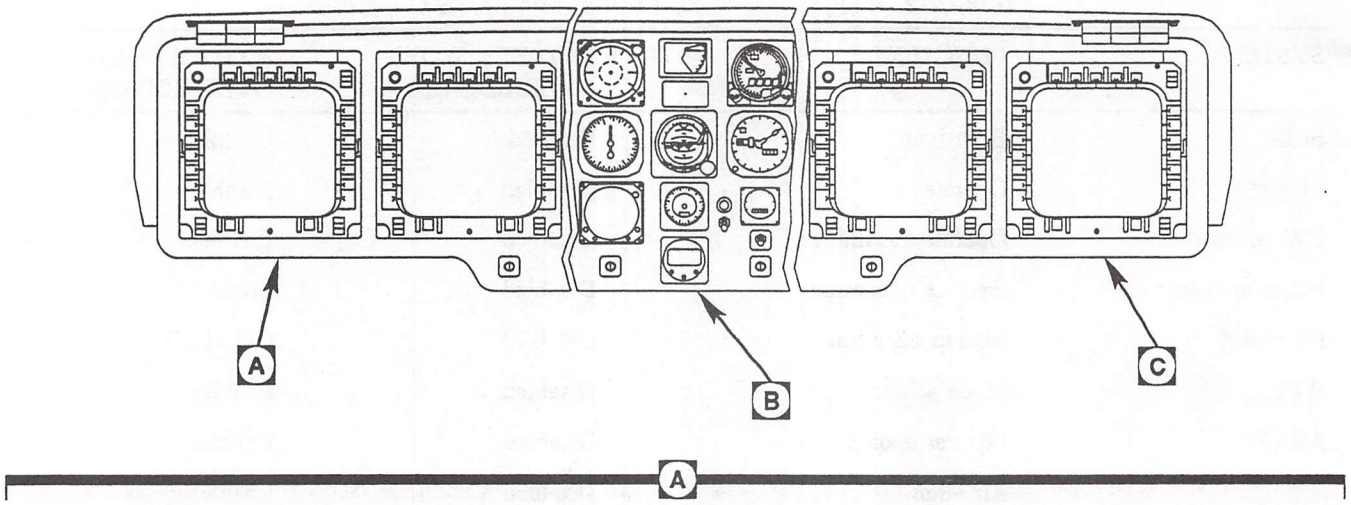

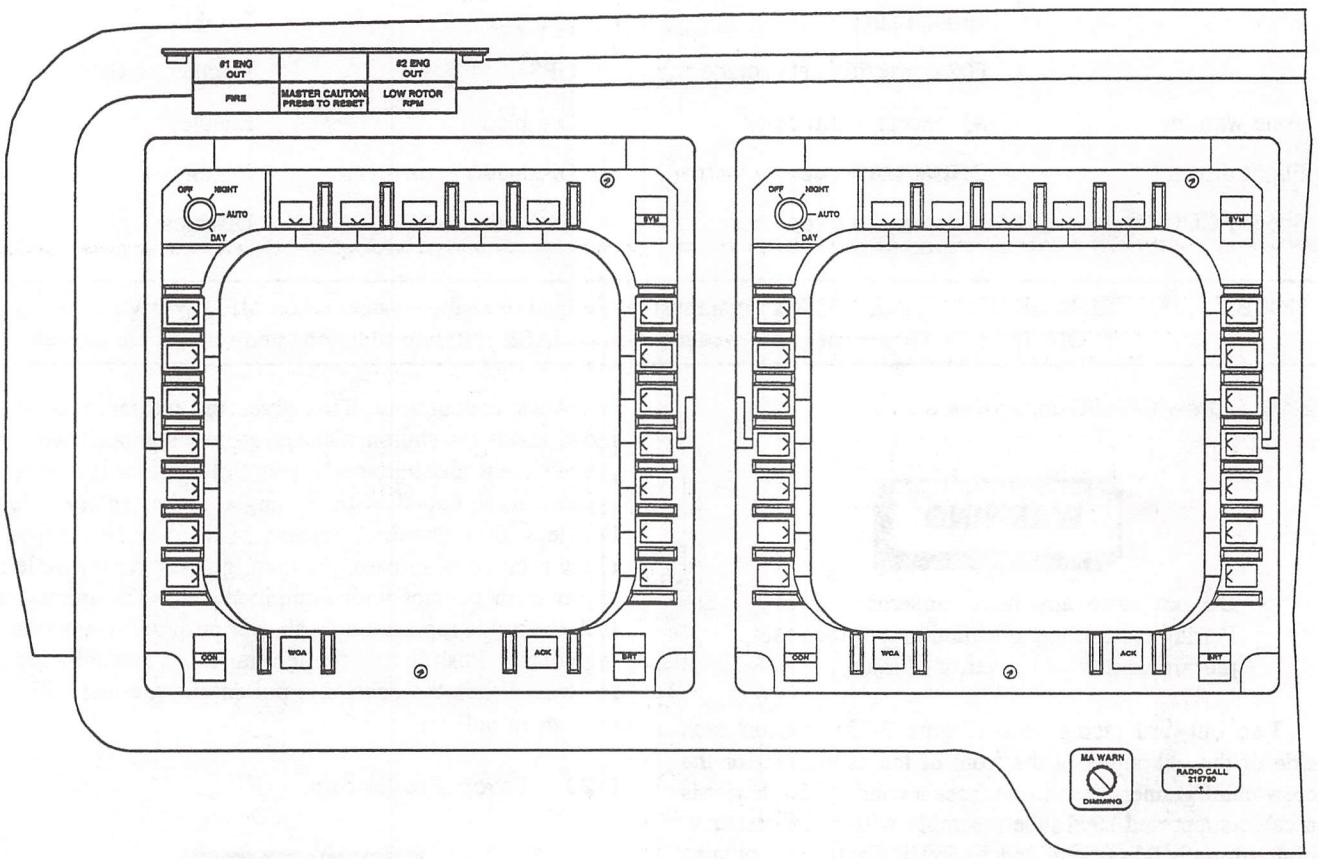

AK0009_1
SA

Figure 2-8. Instrument Panel (Sheet 1 of 2)

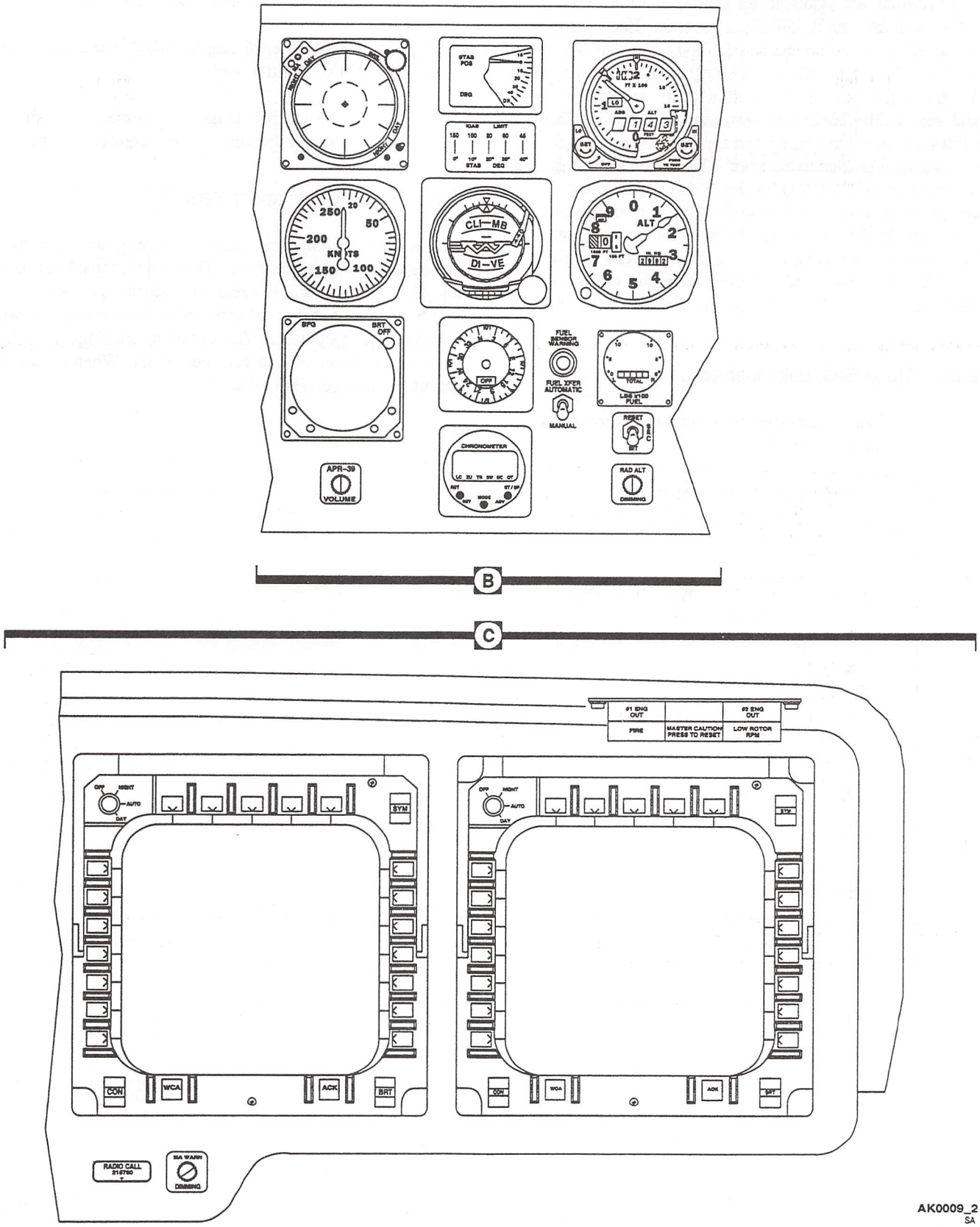

Figure 2-8. Instrument Panel (Sheet 2 of 2)

Provisions are available for the installation of 14 troop seats, including crew chief/gunner seats. Each troop seat has a belt and shoulder harness for body restraint. The common attachment buckle has a single-point release marked TURN. When turned, it simultaneously releases all belts and straps. The backs and seat pans are attached through cables to the cabin ceiling and through cables and rods to seat fittings installed in the floor. The seats may be installed in any quantity from 1 to 14. Each seat contains two lower energy attenuators designed and oriented to reduce personnel injury. In Row 1, where a forward facing troop seat can be installed, attenuator small end is up and toward right of aircraft. When seats are removed from the cabin, adjustments must be made for weight and balance using data in Figure 6-5.

2-21. Troop Seat Belt Operation.

1. Extend shoulder strap and attach shoulder strap fittings to buckle.
2. Extend lap belt and place across body.
3. Place lap belt fitting into buckle and make certain of positive lock.
4. Adjust lap belt tension adjustments and shoulder strap adjustments for a comfortable fit.

2-22. Troop Commander Seat.

The troop commander seat is installed between the crew chief/gunner and gunner seats. The back is capable of folding down for forward and rearward access. The seat has a seat belt without shoulder harnesses and is less crashworthy than normal troop seats. The common attachment buckle has a single-point release marked TURN. When turned, it simultaneously releases all belts.

Section II EMERGENCY EQUIPMENT

2-23. Fire Protection Systems.

Fire detection and fire extinguishing systems are installed so that a fire may be detected and put out at either engine or the APU installation, without affecting the remaining two. The engines and APU are monitored by infrared radiation type sensing units, and protected by a main and reserve high-rate discharge type fire extinguishing installation.

2-24. Fire Detection System.

A detection system provides fire warning to the cockpit in case of fire in either main engine compartment or in the APU compartment. The system consists of five radiation-sensing flame detectors, control amplifiers, and a test panel. Two detectors are installed in each main engine compartment and one detector is in the APU compartment (Figure 2-1). The flame detectors are solid-state photo-conductive cells providing continuous volume optical surveillance of the monitored areas. In case of fire, the detectors react to the infrared radiation and send a signal to one of the three control amplifiers which in turn signals the fire warning assembly lighting the proper T-handle (Figure 2-6). Also, the master FIRE warning lights will go on if a fire is detected (Figure 2-8). The detector system automatically resets itself, with warning lights off, when the infrared radiation source ceases to emit.

2-25. Fire Detector Test System.

A FIRE DETR TEST switch on the upper console (Figure 2-6), when moved to positions 1 and 2, sends a test signal through the system to turn on the FIRE warning lights and verify proper system operation to, but not including, the photo cells. The test position 1 lights No.1 and No.2 ENG EMER OFF T-handles and APU T-handle and checks all firewall mounted detectors. The test position 2 lights No.1 and No.2 ENG EMER OFF T-handle only, and checks all deck mounted detectors. The engines and APU are completely enclosed within their own firewall compartment, thus reducing the possibility of a false fire warning from outside sources. Electrical power to operate the No.1 and No.2 detector system is by the dc essential bus through circuit breakers marked FIRE DET, NO.1 ENG and NO.2 ENG, respectively. Power to operate the APU detector system is by the battery bus through a circuit breaker marked APU FIRE DET.

2-26. Fire Extinguishing Systems.

WARNING

If the battery is removed or has an insufficient charge level, the No.1 engine and APU have no fire extinguishing capability.

A high-rate discharge extinguishing system provides a two-shot, main and reserve capability to either main engine compartment or APU compartment. Two containers are each filled with 2.5 pounds of liquid and charged with gaseous nitrogen to a pressure between 600 and 625 psi. The containers are mounted above the upper deck, behind the right engine compartment (Figure 2-1). Both containers have dual outlets, each with its own firing mechanism. Each extinguishing agent container has a pressure gage, easily viewed for preflight inspection. The system also has a thermal discharge safety port that will cause a visual indicator on the right side of the fuselage to rupture, indicating that one or both containers are empty. Electrical power to operate the No.1 main and No.2 reserve outlet valves is by the No.2 dc primary bus through a circuit breaker, marked FIRE EXTGH on the pilot's circuit breaker panel. Power to operate the No.2 main and No.1 reserve fire bottles outlet port valves and the directional control valve is by the battery utility bus through a circuit breaker on the lower console marked FIRE EXTGH.

2-27. Fire Extinguisher Arming Levers (T-handles).

Three T-shaped handles: one APU T-handle is on the upper console (Figure 2-6) marked APU, and two engine fire extinguisher T-handles are on the engine control quadrant marked #1 ENG EMER OFF and #2 ENG EMER OFF (Figures 2-4). The handle marked #1 ENG EMER OFF is for the No.1 engine compartment, the handle marked #2 ENG EMER OFF is for the No.2 engine compartment, and APU is for the auxiliary power unit compartment. When a handle is pulled, dc power actuates the fire extinguisher logic module to select the compartment to which the fire extinguisher agent is to be directed, and also energizes the circuit to the fire extinguisher switch. The ends of the handles house fire detector warning lights. The #1 ENG EMER OFF and #2 ENG EMER OFF T-shaped handles have green and red lights. The APU T-shaped handle has a

red light only. Green lights are provided for NVG operations and red lights for normal use. When operating in the NVG mode, the first indication will be a dim red light for approximately 0.5 second, then the green light will illuminate. AC power is used to illuminate the green NVG lights and dc power is used to illuminate the red lights.

2-28. Fire Extinguisher Controls.

WARNING

In case of fire, when ac electrical power is not applied to the helicopter, the reserve fire extinguisher must be discharged. Fire extinguisher agent cannot be discharged into No.2 engine compartment if ac electrical power is not applied to helicopter.

A switch marked FIRE EXTGH on the upper console (Figure 2-6) has marked positions RESERVE-OFF-MAIN. The switch is operative only after one of the ENG EMER OFF or APU lever (T-handle) has been pulled. When the switch is placed to MAIN, after an ENG EMER OFF lever has been pulled, the contents of the fire extinguisher bottle is discharged into the corresponding compartment. When the FIRE EXTGH switch is placed to RESERVE after an ENG EMER OFF lever has been pulled, the contents of the opposite fire extinguisher bottle is discharged into the selected compartment. The contents of the fire extinguisher bottle discharges into the compartment of the last lever pulled.

2-29. Crash-Actuated System.

A crash-actuated system is part of the fire extinguisher system. An omnidirectional inertia switch is hard-mounted to the airframe to sense crash forces. Upon impact of a crash of 10 g's or more, the switch will automatically fire both fire extinguishing containers into both engine compartments. Electrical power is supplied from the battery utility bus through a circuit breaker on the lower console marked FIRE EXTGH.

2-30. Hand-Operated Fire Extinguishers.

WARNING

Exposure to high concentrations of extinguishing agent or decomposition products should be avoided. The liquid should not be allowed to contact the skin; it could cause frostbite or low temperature burns.

One hand-operated fire extinguisher (Figure 9-1) is mounted on the cabin wall left of the right gunner's seat. A second fire extinguisher is on the left side of the right avionics rack. The extinguishers are held in place by a quick-release spring.

2-31. Crash Ax.

One ax (Figure 9-1) is installed on the right side avionics rack in the cabin.

2-32. First Aid Kits.

Three first aid kits (Figure 9-1) are installed, one on the back of the copilot's seat, one on the back of the pilot seat, and one on the cabin wall behind the copilot.

Section III ENGINES AND RELATED SYSTEMS

2-33. Engine.

The engine (T701C) (Figure 2-9) is a front drive, turboshaft engine of modular construction. One is mounted on the airframe at either side of the main transmission. The engine is divided into four modules: (1) cold section, (2) hot section, (3) power turbine section, and (4) accessory section.

2-34. Cold Section Module.

The cold section module (Figure 2-9), includes the inlet particle separator, the compressor, the output shaft assembly, and line replaceable units (LRUs). The inlet particle separator removes sand, dust, and other foreign material from the engine inlet air. Engine inlet air passes through the swirl vanes, spinning the air and throwing dirt out by inertial action into the collector scroll, after which it is sucked through by the engine-driven blower and discharged overboard around the engine exhaust duct. The compressor has five axial stages and one centrifugal stage. There are variable inlet guide vanes and variable stage 1 and stage 2 stator vanes. LRUs mounted on the cold section module are the digital electronic control (DEC) unit, anti-icing and start bleed valve, history counter, ignition system, and electrical cables.

2-35. Hot Section Module.

The hot section module (Figure 2-9) consists of three subassemblies; the gas generator turbine, stage 1 nozzle assembly, and combustion liner. LRUs on the hot section module are the ignitors. The gas generator turbine consists of a gas generator stator assembly and a two-stage air cooled turbine rotor assembly which drives the compressor and the accessory gear box. Stage 1 nozzle assembly contains air cooled nozzle segments. The nozzle assemblies direct gas flow to the gas generator turbine. The combustion liner is a ring-type combustor cooled by air flow from the diffuser case.

2-36. Power Turbine Section Module.

The power turbine module (Figure 2-9), includes a two-stage power turbine, exhaust frame, and the shaft and C-sump assembly. The LRUs mounted on the power turbine section module are the thermocouple harness, torque and overspeed sensor, and NP sensors.

2-37. Accessory Section Module.

The accessory section module (Figure 2-9) includes the top mounted accessory gear box and a number of LRUs. The LRUs mounted on the module are the hydromechanical unit (HMU), fuel boost pump, oil filter, oil cooler, alternator, oil and scavenge pump, particle separator blower, fuel filter assembly, chip detector, oil filter bypass sensor, radial drive shaft (internal), and overspeed and drain valve.

2-38. Engine Fuel Supply System.

The engine fuel supply system consists primarily of the low pressure boost pump, fuel filter, HMU, and overspeed and drain valve (ODV).

2-39. Fuel Boost Pump.

A low pressure suction fuel boost pump (Figure 2-9) is installed on the front face of the engine accessory gear box. It assures that the airframe fuel supply system is under negative pressure, lessening the potential of fire in case of fuel system damage. It also provides fuel pressure for engine operation above 10,000 feet. A hole in the fuel system piping will not leak fuel out, but rather will allow air in. Lighting of the ENG 1 or ENG 2 FUEL PRESS LO caution message on the MFDs, at idle speed and above, could indicate a leak or failed engine boost pump.

2-40. Fuel Filter.

The fuel filter is a barrier type full flow filter with integral bypass. An electrical switch illuminates the ENG 1 FUEL BYPASS or ENG 2 FUEL BYPASS caution message on the MFDs when filter bypass occurs. In addition, a red button on the filter housing pops out when filter element differential pressure indicates impending bypass. Power for the fuel filter bypass lights is from the No.1 and No.2 dc primary busses through circuit breakers marked WARN LTS.

2-41. Fuel Pressure Warning System.

The engine fuel pressure warning system for each engine consists of a pressure switch that turns on a fuel pressure caution message on the MFDs. Fuel pressure caution messages marked ENG 1 FUEL PRESS LO and/or ENG 2 FUEL PRESS LO will illuminate when fuel pressure drops

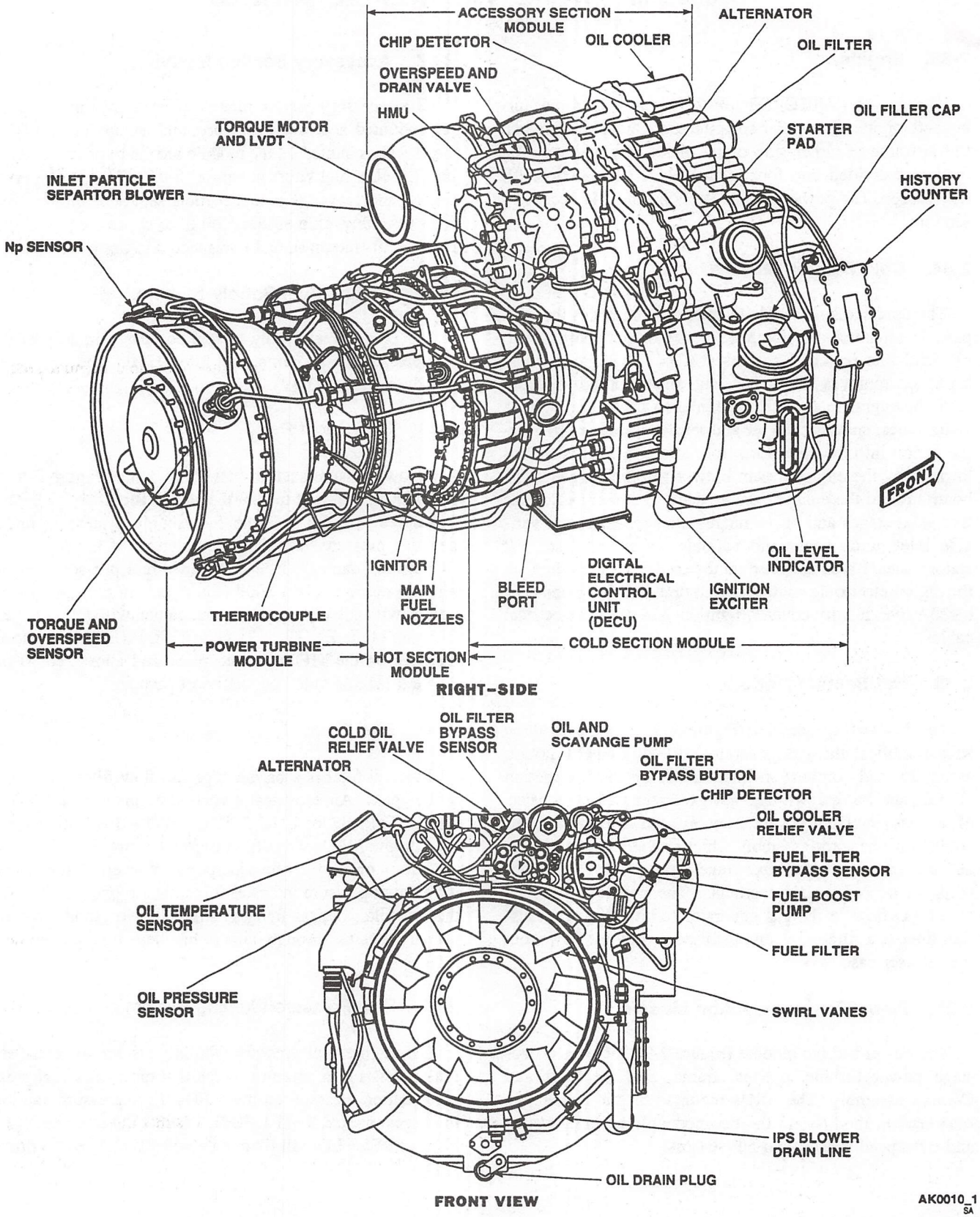

Figure 2-9. Engine T701C (Sheet 1 of 2)

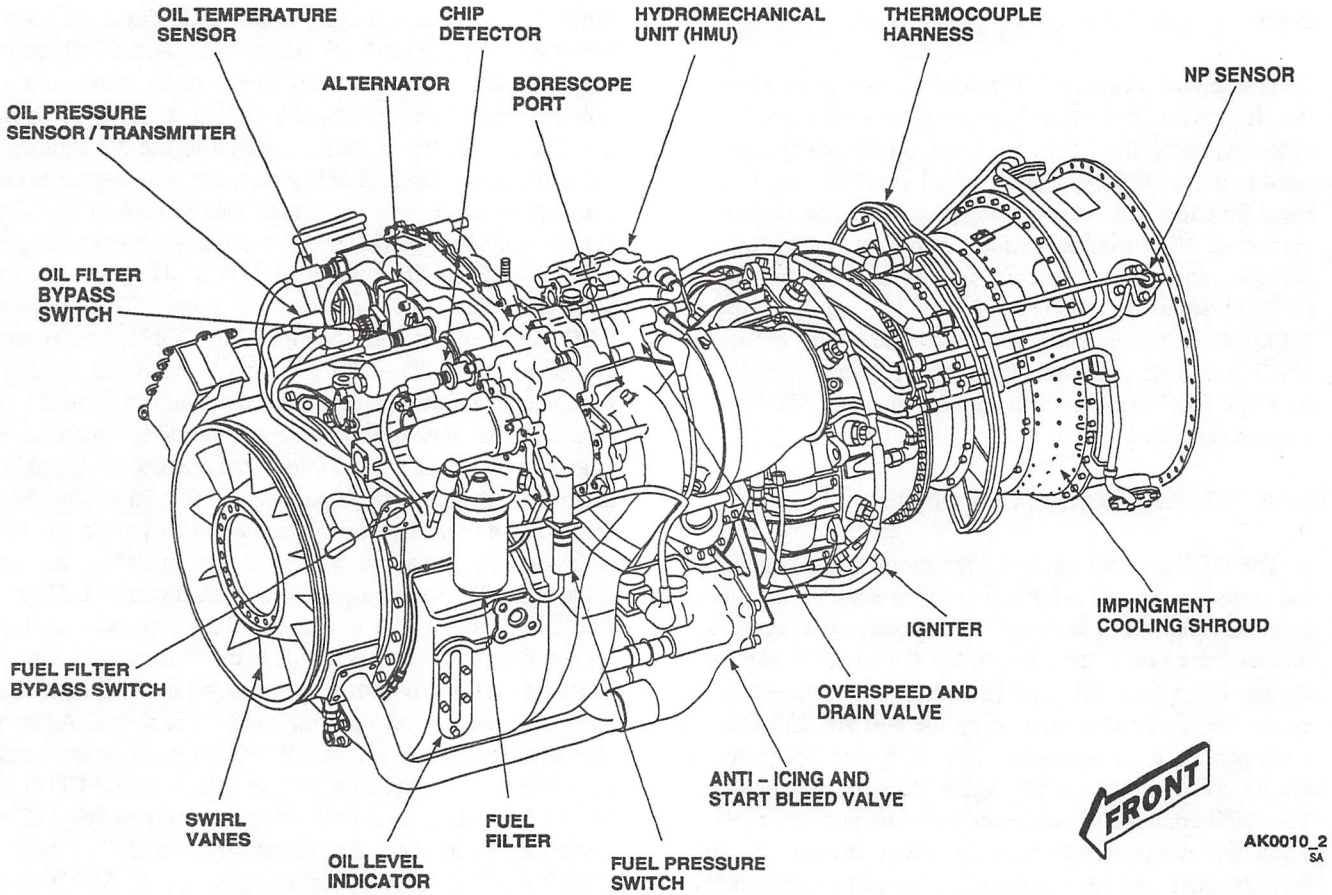

Figure 2-9. Engine T701C (Sheet 2 of 2)

below 8.5 ±0.5 psi. This message will be displayed when fuel pressure drops below 8.5 ±0.5 psi due to failure of the low pressure boost pump, an air leak, or evolved vapors in the suction fuel system. To prevent a flameout, the boost pumps should be switched on immediately if either ENG 1 or ENG 2 FUEL PRESS LO caution message illuminates. Power for the No.1 engine fuel pressure warning system is supplied by the No.1 primary dc bus through the NO. 1 ENG WARN LTS circuit breaker on the No.1 circuit breaker panel. Power for the No.2 engine fuel pressure warning system is supplied by the No.2 primary dc bus through the NO.2 ENG WARN LTS circuit breaker on No.2 breaker panel.

2-42. Engine Fuel System Components.

Control of fuel to the combustion system is done by the HMU. The HMU is mounted on the rear center of the accessory gear box (Figure 2-9). A vane high pressure pump in the HMU delivers fuel into the combustor. Various parameters are sensed by the HMU and influence fuel flow and variable geometry position. The HMU responds to two separate mechanical linkage inputs from the cockpit. A collective pitch linkage provides load demand changes to the HMU. The pilot actuates the HMU when he moves the collective pitch. The other linkage input is from the ENG POWER CONT lever to the HMU. Fuel from the HMU

flows to the ODV. The ODV has three functions. It sends fuel through the main fuel manifold to the injectors for starting acceleration and engine operations. It purges fuel from the main fuel manifold on shutdown. It also shuts off fuel flow to prevent hot starts when activated by the HSP.

2-43. Engine Alternator.

The engine alternator (Figure 2-9) has three windings which provide separate voltage outputs. One winding provides power to the ignition exciter, one winding provides power to the DEC for control of all essential engine electrical functions, and one winding provides a continuous reference of NG information for display on the MFDs and provides an input to the DEC for the hot start prevention (HSP) system. An alternator failure will cause a loss of MFD NG indication and will activate the engine out audio, VWS message, and warning lights. Except for HSP, all essential DEC functions will be maintained by 400 Hz, 120 vac aircraft power.

2-44. Digital Electronic Control (DEC).

The DEC controls electrical functions of the engine and transmits operational information to the cockpit. It contains a microcomputer processor in a conductive composite molded case that is mounted below the engine compressor casing. Except for HSP, the DEC can be fully powered by either the engine alternator or by the 400 Hz, 120 vac aircraft power. It incorporates logic that will eliminate the torque spike signal during engine start-up and shutdown. The DEC contains an automatic hot start preventor (HSP). The DEC accepts inputs from the alternator, thermocouple harness, NP1 and NP2 sensors, torque and overspeed sensor, torque signal from opposite engine for load matching, aircraft collective stick, aircraft main rotor speed (NR) sensor, feedback signal from the HMU and a demand speed from the engine speed trim button. The torque matching system increases power on the lower-power engine, while not directly affecting the high-power engine. The transient compensation system provides significant droop improvement during some maneuvers by monitoring engine torque, collective rate of change, and NR speed rate of change. The temperature limiting system limits fuel flow when the turbine temperature (engine temperature) reaches the 10 minute limiting value of 866 -4/+14°C. When the opposite engine torque is less than 50%, the automatic contingency power limiting system will switch to the 2.5 minute value of approximately 891 -5/+15°C. Fuel flow is reduced, to hold a constant engine temperature. When maximum power is demanded, it is normal to see a transient increase above the 903°C ENG TEMP. Engine temperature limiting does not prevent overtemperature caused by compressor stall, engine starts, or when ENG POWER CONT lever is at LOCKOUT. The power control lever must be quickly retarded to control engine temperature. The overspeed protection system senses a separate NP signal independent of the governing channel. When an overspeed is sensed, it shuts off fuel flow to the engine by energizing the ODV and sends a signal to the aircraft to turn on ignition. As soon as the engine NP level drops below the value which caused the overspeed condition, the ODV is deenergized and fuel flow returns which enables the engine to continue operating. The DEC also provides a signal to the NP indicators, TQ indicators, ENG TEMP indicators, and engine history counter. In case of a DEC malfunction, operation of the system may be overridden by momentarily advancing the ENG POWER CONT lever to LOCKOUT stop, then retarding to manually control engine power. To remove the DEC from lockout, the ENG POWER CONT lever must be moved to IDLE. The DEC also provides signal validation for selected input signals within the electrical control system. DEC signals are continuously validated when the engine is operated at ground idle speed and above. If a failure occurs on a particular input signal, the failed functional area will be identified by a predetermined fault code. Fault codes are displayed in words on the aircraft status page (Figure 3-17) when the pilot sequence down to DECU1 or DECU2. Starting with the lowest code, a code is displayed for 4 seconds, then a 2-seconds blank before displaying the next code. This procedure will continue until all fault codes have been displayed, then the cycle is repeated. Additionally, discrete torque values will be displayed on the engine instrument page (replacing torque value with DECU codes, Figure 5-2) when both engines are shut down and 120 vac power is still applied, this occurs after an ENG 1 DEC or ENG 2 DEC advisory message appears on the MFDs. However, the aircraft status page will list all DEC faults in words instead of torque values. Fault codes from a previous flight are reset whenever engine speeds are at ground idle and above. Fault codes can be suppressed by depressing one of the engine overspeed test buttons on the upper console. The fault codes can also be recalled by depressing either button again. The following TQ values represents DEC signal failures:

TQ VALUE	SIGNAL FAILED
15%	DEC
25%	NP Demand Channel
35%	Load Share Channel
45%	Turbine Gas Temperature Channel
55%	Alternator Power

TQ VALUE	SIGNAL FAILED
65%	NG Channel
75%	NP Channel
85%	Torque and Overspeed Channel
95%	Hot Start Prevention Channel
105%	Aircraft 400 Hz Power
115%	Collective Channel
125%	NR

2-45. Hot Start Prevention (HSP).

The HSP system is a part of the DEC, and prevents overtemperature during engine start such as with compressor stall during engine starts. The HSP system receives the power turbine speed (NP) signals, gas generator speed (NG) signals, and turbine gas temperature (engine temperature) signals. When NP is below 50% and NG is below 60% and ENG TEMP exceeds 900°C, an output from the HSP system activates a solenoid in the ODV. This shuts off fuel flow and causes the engine to shut down. The HSP system will not operate unless 400 Hz, 120 vac aircraft power and the alternator NG reference signal are provided to the DEC. During an emergency, HSP can be disabled by pressing and holding either one of the overspeed test buttons (TEST A/B) during the starting sequence.

2-46. Ignition System.

The engine ignition system is a noncontinuous ac powered, capacitor discharge, low voltage system. It includes a dual exciter, two igniter plugs, ignition leads, and ENGINE IGNITION key switch.

2-47. History Counter.

The engine history counter is mounted on the right side of the swirl frame (Figure 2-9). It displays four digital counters which record information for maintenance purposes only.

2-48. Thermocouple Harness.

A seven probe harness measures the temperature of the gases at the power turbine inlet. It provides a signal to the DEC that is relayed to the history counter through a remote terminal unit (RTU), which generates a digital signal representing the engine temperature value sensed by the seven temperature probes. This value is displayed on an MFD screen, if desired.

2-49. Torque and Overspeed Sensors.

Two sensors are installed on the exhaust frame of the engine. One sensor provides the power turbine governor and tachometer signal to the DEC. The other sensor feeds the torque computation circuit and overspeed protection system.

2-50. Engine Bleed-Air System.

Two bleed-air ports are incorporated on the engine. The outboard port supplies bleed-air to the engine air inlet anti-icing system as described in Section IX. The inboard port ties into the pressurized air system. Air from this port is supplied to the cabin heating system and can be supplied to the other engine for crossbleed starts.

2-51. Engine Oil System.

Lubrication of each engine is by a self-contained, pressurized, recirculating, dry sump system (Figure 2-10). Included are oil and scavenge pump, emergency oil system, monitored oil filter, tank, oil cooler, and seal pressurization and venting. The oil tank is a part of the main frame. Each scavenge line has a screen at the scavenge pump to aid fault isolation. A chip detector in the line downstream of the scavenge pump activates a caution message when metal particles are detected in the oil system.

2-52. Engine Emergency Oil System.

The engine has an emergency oil system in case oil pressure is lost. Oil reservoirs built into the A and B sumps are kept full during normal operation by the oil pump. Oil bleeds slowly out of those reservoirs and is atomized by air jets, providing continuous oil mist lubrication for the bearings. An ENG 1 OIL PRESS LO or ENG 2 OIL PRESS LO caution message on the MFDs will go on when oil pressure drops below any one of the following conditions: (1) engine NG is above 90% and engine OIL PRESS is below 35 psi, (2) engine NG is above 70% and engine OIL PRESS is below 20 psi, and (3) engine NG is at or below 70% and engine OIL PRESS is below 18 psi.

2-53. Oil Tank.

The oil tank is an integral part of the engine. Tank capacity is 7.3 US quarts. The filler port is on the right side of each engine (Figure 2-9). Oil is supplied to the oil pump via a screen. Oil level is indicated by a sight gage on each side of the tank. Servicing of the tank is required if the oil level reaches the ADD line. Over servicing is not possible because extra oil will flow out the filler port. The scavenge

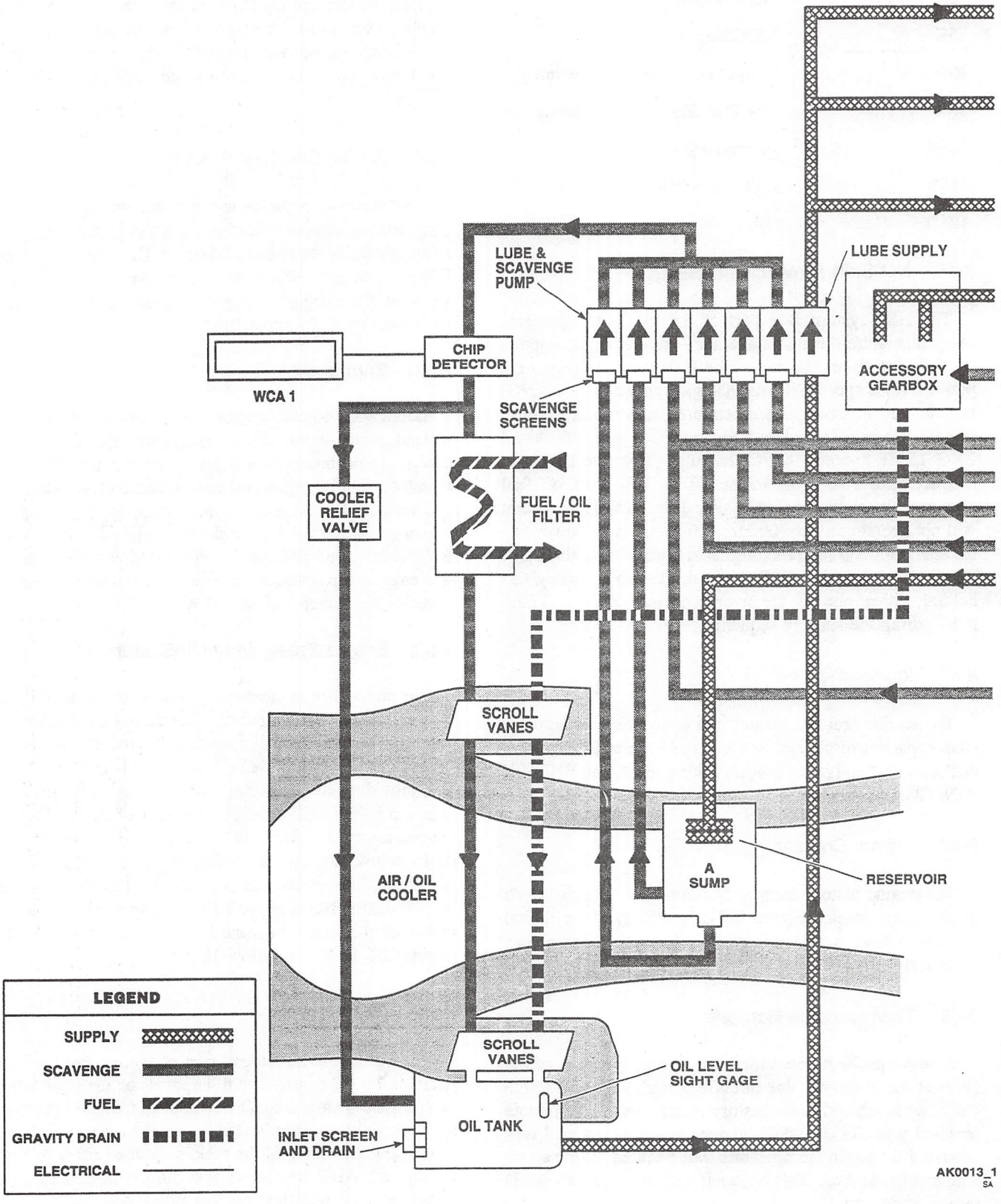

Figure 2-10. Engine Oil System (Sheet 1 of 2)

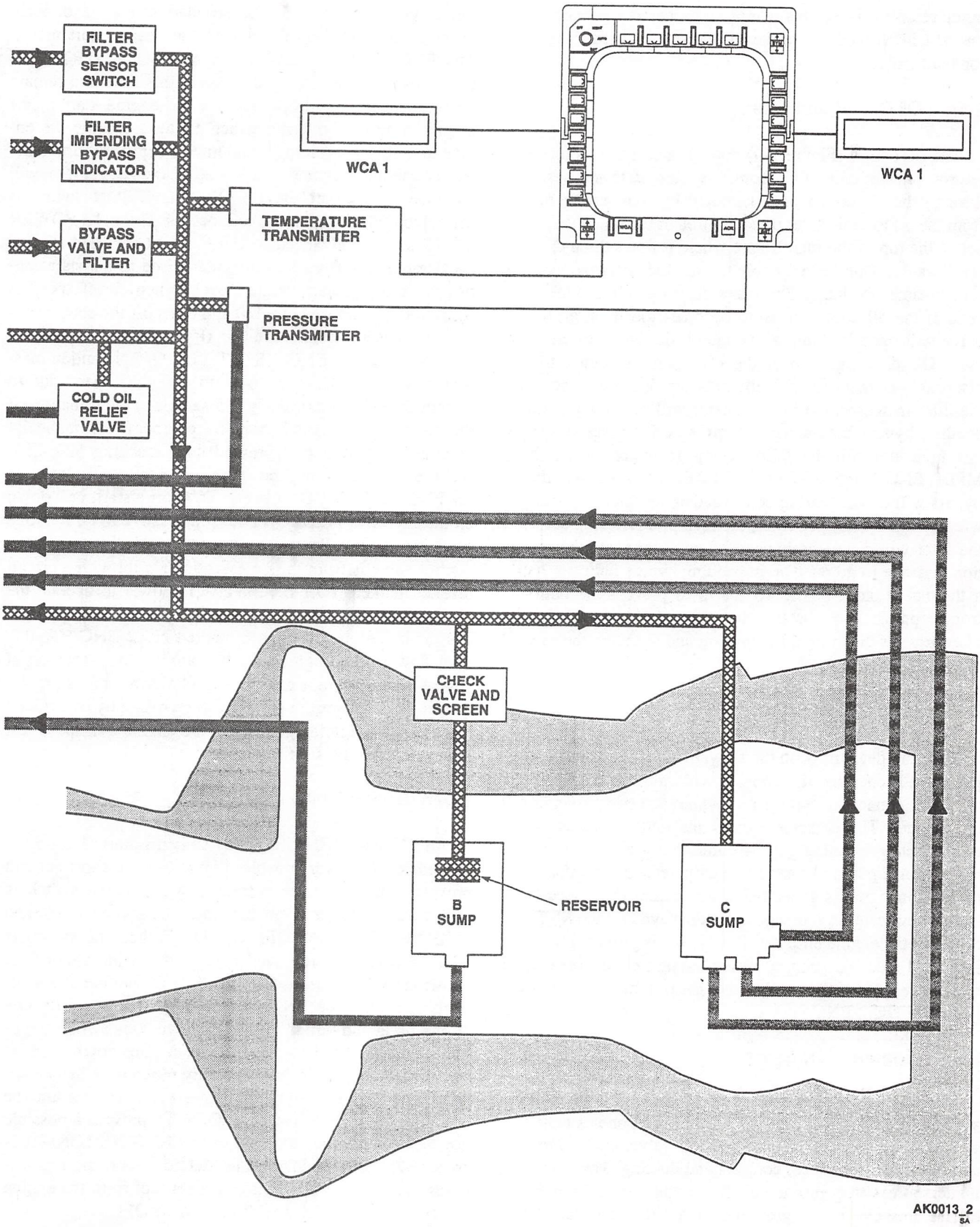

Figure 2-10. Engine Oil System (Sheet 2 of 2)

pump returns oil from the sumps and accessory gear box to the oil tank through six scavenge screens, each one labeled for fault isolation.

2-54. Oil Cooler and Filter.

The oil cooler (Figure 2-9) cools scavenge oil before it returns to the tank. Oil from the chip detector passes through the oil cooler and is cooled by transferring heat from the oil to fuel. After passing through the oil cooler, oil enters the top of the main frame where it flows through the scroll vanes. This further cools the oil and heats the vanes for full-time anti-icing. The vanes discharge oil into the oil tank. If the oil cooler pressure becomes too high, a relief valve will open to dump scavenge oil directly into the oil tank. Oil discharged from the oil pump is routed to a disposable-element filter. If the pressure differential across the filter increases, the first indicator will be a popped impending bypass button. As the pressure increases further, this indication will be followed by an indication on the MFDs, ENG 1 or ENG 2 OIL BYPASS, after which a filter bypass will occur. During cold weather starting, or starting with a partially clogged filter, the high pressure drop across the filter will cause the bypass valve to open and the caution message to go on. The impending bypass indicator has a thermal lockout below 46 ±8°C to prevent the button from popping. A cold-start relief valve downstream of the filter protects the system by opening and dumping the extra oil to the gear box case.

2-55. Engine Chip Detector.

The chip detector is on the forward side of the accessory gear box. It consists of a housing with integral magnet and electrical connector, with a removable screen surrounding the magnet. The detector attracts magnetic particles at a primary chip detecting gap. A common oil discharge from the scavenge pump is routed to a chip detector. If chips are detected, a signal is generated which causes the respective engine chip caution message to be displayed on the MFDs. Power to the engine chip detector system is provided by the No.1 and No.2 dc primary buses through circuit breakers marked WARN LTS, under the general headings NO.1 ENG and NO.2 ENG.

2-56. Engine Start System.

The pneumatic start system uses an air turbine engine start motor for engine starting. System components consist of an engine start motor, start control valve, external start connector, check valves, controls and ducting. Three pneumatic sources may provide air for engine starts: the APU, engine crossbleed, or a ground source. When the start button is pressed, air from the selected source is directed through the start control valve to the engine start motor. The ENG 1 STRT VLV OPEN or ENG 2 STRT VLV OPEN caution message will go on at this time and remain on until the starter drops out. As the engine start motor begins to turn, an overrun clutch engages causing the engine to motor. As the engine alternator begins to turn, electrical current is supplied to the ignition exciter. Ignition will continue until either the ENGINE IGNITION switch is moved to OFF or starter dropout occurs. The ENG POWER CONT lever is advanced to IDLE detent for light-off and acceleration. A starter speed switch wired to the start control valve terminates the start cycle when cutoff speed is reached (52%-65% NG speed) and turns off the starter caution message and engine ignition (If engine start is successful, ENG 1 and/or ENG 2 STRT VLV OPEN caution message(s) will extinguish by 64% to 66% NG speed due to system delay, approximately 2.5 seconds.) Malfunction of the starter speed switch may be overcome by manually holding the start button pressed until reaching 52%-65% NG speed. To drop out the starter, manually pull down on the ENG POWER CONT lever. To abort a start, pull down on the ENG POWER CONT lever and move to OFF in one swift movement. Power to operate the No.1 engine start control valve is from the dc essential bus through a circuit breaker marked NO.1 ENG START. Power to operate the No.2 engine start control valve is from the No.2 dc primary bus through a circuit breaker marked NO.2 ENG START. Fuel flow to the engine will be automatically shut off if engine temperature exceeds 900°C during the start sequence. The hot start preventer can be manually overridden by pressing and holding either of the engine overspeed test buttons during the start sequence.

2-57. Engine Ignition Key Switch.

An ENGINE IGNITION key switch is installed on the left side of the lower console (Figure 2-4), to short out and prevent ignition exciter current flow when the switch is OFF and the starter is on the line. The switch is marked ENGINE IGNITION, OFF and ON. When the switch is ON, the shorts are removed from both engine alternators, allowing exciter current to flow when the engine alternator begins to turn. The ENGINE IGNITION is normally ON during flight and turned off at shutdown. One switch serves both engines. If the switch is OFF, neither engine can be started, although motoring capability remains. When an engine is to be motored without a start, make certain the ENGINE IGNITION switch is OFF. To prevent a possible hot or torching start never turn the ENGINE IGNITION switch ON after motoring has started. Abort start procedures must be done to remove excess fuel from the engine if a start was attempted with the switch OFF.

2-58. APU Source Engine Start.

The APU (GTC-P36-150) provides an on-board source of air and auxiliary electrical power. The APU bleed-air output is enough to start each engine individually at all required ambient temperatures and enough to start both engines simultaneously within a reduced range of ambient temperatures. The AIR SOURCE HEAT/START switch must be at APU position. Refer to Section XII for complete APU description.

2-59. Crossbleed Engine Start System.

Crossbleed engine starts are used when one engine is operating and it is desired to start the other engine from the bleed-air source of the operating engine. To make a crossbleed start, the operating engine must be at least 90% NG speed. When the AIR SOURCE HEAT/START switch is placed to ENG, both engine crossbleed valves will be energized open. Pressing the start button for the engine not operating will cause the start valve for that engine to open at the same time the crossbleed valve for the starting engine will close, and remain closed until starter dropout occurs. At 52%-65% NG speed, the starting engine start valve will close, stopping bleed-air flow to the starter. Crossbleed starts will be considerably slower than APU starts due to the lower energy available, the starter may not automatically drop out at 52-65% NG. In this case, the starter should be dropped out manually by pulling down on the ENG POWER CONT lever. Power to the bleed shutoff valve is provided by the No.1 dc primary bus through a circuit breaker marked AIR SOURCE HEAT/START.

2-60. External Source Engine Start.

The external start pneumatic port (Figure 2-1) is on the left side of the fuselage. It is the attachment point for a bleed-air line from an external source for engine starting or helicopter heating on the ground. The assembly contains a check valve to prevent engine or APU bleed-air from being vented. A minimum external air source of 40 psig and 30 ppm at 149°C measured at the pneumatic connector pressurizes the start system up to the engine start control valves, requiring only that electrical power be applied. If an emergency start is made without ac electrical power, No.1 engine must be started first because the No.2 engine start control valve will not operate without dc primary bus power.

2-61. Engine Control System.

The engine control system consists of the engine quadrant, load demand system, speed control system and overspeed protective system.

2-62. Engine Control Quadrant.

The engine control quadrant (Figure 2-11) consists of two ENG POWER CONT levers, two ENG FUEL SYS selector levers, two ENG EMER OFF T-handles, two engine quadrant secondary stops, and a manual rotor brake interlock release. A starter button is on each ENG POWER CONT lever. ENG POWER CONT lever has four detent positions: OFF-IDLE-FLY-LOCKOUT. Movement of the ENG POWER CONT levers moves a cable to mechanically shut off fuel or set available NG speed. The lever is advanced to FLY for flight. This ENG POWER CONT lever setting represents the highest power that could be supplied if demanded. Power turbine speed (NP1 or NP2) is not governed until the power lever is advanced from IDLE. When shutdown is required, the ENG POWER CONT lever must be pulled out slightly, at the same time the latch release must be pressed down, then the ENG POWER CONT lever can be moved below IDLE detent. After being moved momentarily to LOCKOUT, the ENG POWER CONT lever is used to manually control NG speed and NP1 or NP2. With the ENG POWER CONT lever at LOCKOUT, the automatic engine temperature limiting system is deactivated and engine temperature must be manually controlled. The overspeed protection system is not deactivated when at LOCKOUT.

2-63. Load Demand System.

With ENG POWER CONT lever at FLY, the DEC and HMU respond to collective signals to automatically control engine speed and provide required power. During emergency operations, when the ENG POWER CONT lever is moved to LOCKOUT and then to some intermediate position, the engine will still respond to collective signals.

2-64. Engine Speed Control System.

An engine rpm control switch on the upper console marked ENG SPD TRIM (Figure 2-6), controls the speed of both engines simultaneously. There is no individual engine trim capability. It is used to supply a signal to the DEC for controlling NP1 and NP2 as required. The ENG SPD TRIM control switch allows adjustment between 96% and 100.5%. Power for engine rpm control system is provided by the No.2 dc primary bus through a circuit breaker marked ENG SPEED TRIM.

2-65. Engine Overspeed Protection System.

Overspeed protection prevents the power turbine from destructive overspeeds. The system is set to trigger at 120% ±1% NP1 or NP2, and will result in a fuel flow shutoff causing the engine to flame out. When NP is reduced below the overspeed limit, fuel flow is returned to the engine and

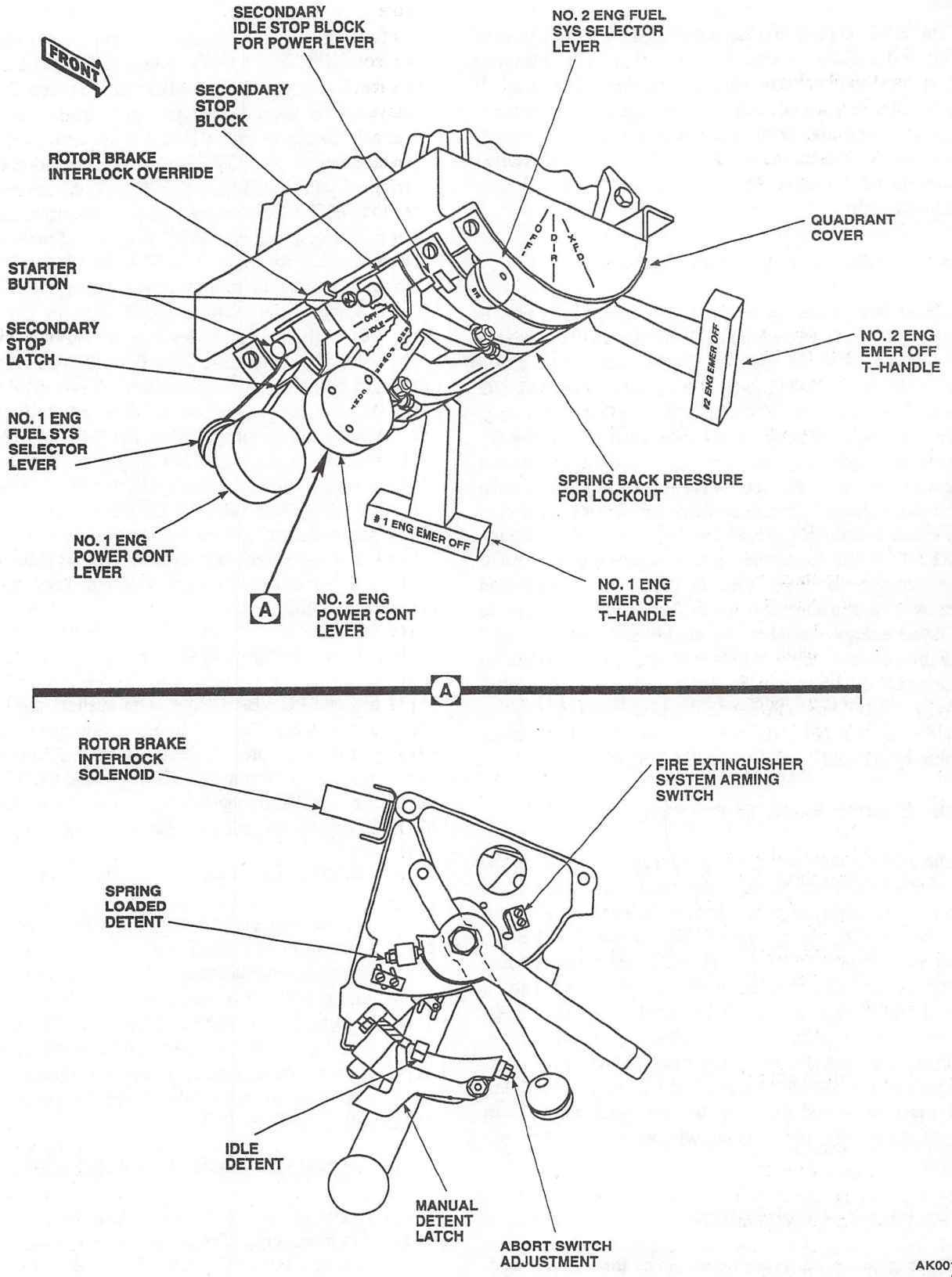

Figure 2-11. Engine Control Quadrant

engine ignition will come on to provide a relight. This cycle will continue until the overspeed condition is removed. Four momentary switches marked NO.1 and NO.2 ENG OVSP, TEST A and TEST B, on the upper console (Figure 2-6) are used to check the circuits. Testing individual circuits A and B indicates that those systems are complete and performing correctly. Dual closing of A and B switches serve to check out both the overspeed system, and the overspeed drain valve (ODV). This check must be done only on the ground. The overspeed protection is not deactivated when in LOCKOUT. Power to the overspeed system is provided by two independent sources; the engine alternators as the primary source, and the No.1 and No.2 ac primary buses as alternate backup sources in case of alternator failure. Circuit protection is through circuit breakers marked NO.1 ENG OVSP and NO.2 ENG OVSP on the No.1 and No.2 ac primary bus circuit breaker panels.

2-66. Hover Infrared Suppressor Subsystem (HIRSS).

The hover IR suppressor (Figure 2-2) provides improved helicopter survivability from heat-seeking missiles throughout the flight envelope. The HIRSS kit has no moving parts. It contains a three-stage removable core which reduces metal surface and exhaust gas temperature radiation and prevents line-of-sight viewing of hot engine surfaces. The HIRSS channels hot exhaust gasses through the three-stage core and inner baffle to induce the flow of cooling air from the engine bay and the inlet scoops. The three-stage core and inner baffle cold surfaces are coated with low-reflectance material. For further cooling, hot exhaust gas is ducted outboard and downward by the engine, away from the helicopter by the exhaust deflector, where additional cooling air is provided by the main rotor downwash. Installation of each HIRSS module requires removal of the standard engine exhaust module and aft cabin door track fairings. HIRSS modules are installed on the basic airframe equipped with HIRSS fixed provisions by two airframe mounts. The aft fairings are installed using existing mounting points and hardware. While operating in a non-hostile environment, the inner baffle can be removed to enhance helicopter performance.

2-67. Engine Instrument and Power Train Displays.

The engine instruments and power train displays are accessed by pressing T4 (INST) key on any MFD, which will display the engine instruments page (Figure 5-2). The POWER TRAIN display (Figure 5-3) is accessed by pressing L2 (POWER TRAIN) key on the engine instruments page. Engine instruments and POWER TRAIN display information is provided by analog sensors, connected to both remote terminal units (RTU1 and RTU2), which converts the information to a digital format for use with the display processors. MFDs provide the pilots with selectable engine and subsystem monitoring. Most engine/system limits are displayed first as advisory messages to alert the pilots. When an advisory message that is correctable by the pilots appears, the pilots must take the appropriate action to avoid entering the caution range for that message. Advisory messages that are not correctable by the pilot shall be noted and the appropriate action taken regarding the possible caution message if/when it appears. The limitations that apply to these displays are discussed in Chapter 5.

a. The engine instruments display appears when T4 (INST) key on any MFD is pressed. The engine instruments display contains information on engine performance (engine temperature, gas generator speed, power turbine speed, and oil pressure), torque available and torque required, main rotor rpm, and fuel quantities. The engine temperature (ENG TEMP), engine torque (TQ), power turbine speed (NP), and main rotor rpm (NR) information is displayed using bar graphs and digital readouts. Engine oil pressure (OIL PRESS), gas generator speed (NG), fuel tank quantities (FUEL TOTAL EXT and MAIN), and torque available and required (TRQ AVL and RQD) information is displayed using digital readouts only. Digital data is shown at the bottom of the bar graph representing the numerical value of the bar graph pointer. The pointers on the bar graphs appear in two sizes. Normal operation range is represented by a small pointer (displayed in green on color MFDs and an open triangle on monochrome MFDs/NVG mode). The caution and exceeded limit operation ranges are represented by larger pointers (yellow or red on color MFDs and crosshatched or reverse video on monochrome MFDs/NVG mode, respectively). Digital readouts use the same display style as pointers except reverse video is used instead of yellow crosshatches, and caution and exceeded limit values are enclosed within a box.

b. The POWER TRAIN display contains indications for oil temperature and pressure for both engines and main transmission. Chip indications are available for both engines, main transmission, right and left accessory gearboxes, input modules 1 and 2, aft transmission, and tail rotor gearbox. The oil pressure and temperature indications are displayed as digital values. When a chip is detected, the associated caution message will appear on all MFDs. On the POWER TRAIN page the word "CHIP" will appear in red on color MFDs and green on monochrome MFDs/NVG mode. Refer to paragraph a above for normal, caution, and exceeded limit indications on color MFDs, monochrome MFDs, and NVG mode.

2-68. Engine Oil Temperature Display.

Each engine has an oil temperature sensor which sends a signal through the RTUs that is converted to digital readouts on the MFDs POWER TRAIN display (Figure 5-3). When the engine oil temperature is within an advisory/caution range, a message is displayed on the MFDs.

2-69. Engine Oil Pressure Display.

Each engine has an engine oil pressure transmitter, downstream of the oil filter, that sends a signal through the RTUs that is converted to digital readouts on the MFDs engine instrument and POWER TRAIN displays (Figure 5-2 and Figure 5-3). When engine oil pressure is within an advisory/caution range, a message is displayed on the MFDs. It may be possible that during idle operations, an engine oil pressure message will go on as pressure increases above 100 psi. Refer to paragraph 8-47, Engine Oil System Characteristics, during cold weather operations.

2-70. Engine Temperature Display.

Each engine has a engine temperature indicating system consisting of thermocouples which sense engine exhaust temperatures. The thermocouples send signals through the RTUs that are converted to digital readouts and vertical bar graphs under the label ENG TEMP on the MFDs engine instrument display (Figure 5-2). When engine temperature is within an advisory/caution range, a message is displayed on the MFDs.

2-71. Gas Generator Speed (NG) Display.

The NG indicating system shows gas generator speed for each engine. The NG sensors send signals through the RTUs that are converted to digital readouts on the MFDs engine instrument display (Figure 5-2). Digital readouts are displayed left and right of NG on the engine instrument display for No.1 and No.2 engines, respectively. When NG speed is within an advisory/caution range, a message is displayed on the MFDs.

2-72. Engine Power Turbine/Rotor Speed Display.

Power turbine (NP) and rotor speed (NR) are indicated on the MFDs under NP1, NP2, and NR labels (Figure 5-2). Rotor rpm (NR) is also displayed in a dedicated box on MFD VSD displays as noted in Chapter 3. Power turbines and rotor sensors send a signal through the RTUs that is converted to digital readouts and vertical bar graphs on the MFDs engine instrument display. Rotor speed is sensed by a speed sensor on the right accessory module. Power turbine speed is sensed by a speed sensor on the engine exhaust frame. When NP1, NP2, or NR speed is within an advisory/caution range, a message is displayed on the MFDs.

2-73. Torque Display.

NOTE

During an engine start, TQ will remain at zero until NG reaches 35%.

The torque system shows the amount of power the engine is delivering to the main transmission. A torque sensor mounted on the exhaust case measures the twist of the power turbine shaft, and transmits this signal to the DEC. In addition, a signal is sent through the RTUs that is converted to digital readouts and vertical bar graphs on the MFDs engine instrument display (Figure 5-2).

Section IV FUEL SYSTEM

2-74. Fuel Supply System.

The fuel supply system consists of two internal main tanks, aerial refueling probe, engine fuel feed system, fuel management panel, fuel quantity indicating system, fuel transfer system, fuel jettison, and refueling/defueling system. In addition to the above, two, three, or four internal auxiliary tanks and/or two external tanks can be installed. A separate suction fuel system is provided for each engine. Fuel is fed from two interchangeable main tanks, which may be replenished through the aerial refueling probe, from the internal auxiliary tanks, and the two external auxiliary tanks (Figure 2-1). Servicing for all tanks is provided by ground pressure/gravity refueling or aerial refueling systems. A crossfeed system permits operation from either or both engines from either main fuel tank. The engines are suction fed. The APU is fed from the left main fuel tank by a separate fuel line. An in-line fuel boost pump provides pressurized fuel to the APU fuel inlet port. All fuel lines are routed in the most direct route. The fuel line network includes self-sealing, breakaway valves that limit fuel spillage in case of aircraft crash or malfunction. The digital readout for total fuel quantity on the instrument display page is a combined total of the main and external fuel tanks only. This does not include any fuel in the internal auxiliary tank(s). A fuel quantity indicator on the instrument panel provides fuel informations on the internal auxiliary tanks.

2-75. Main Tanks.

Both fuel tanks are crashworthy, self-sealing, and interchangeable. Each tank contains a pressure refuel/defuel valve, fuel quantity and low-level sensors, high-level shutoff valve, low-level shutoff valve, check valve sump drain, and a self-sealing breakaway vent valve. (Refer to Table 2-8 for tank capacity.) Fuel tank drains are in the sumps to permit removal of sediment and water and provide fuel sampling. Fuel sampling is primarily done with a thumb-operated handpump fuel sampling kit (Figure 2-34) containing 5 feet of plastic tubing. The tubing is placed in a guide tube inside the fuel tank and is directed to the bottom of the tank. The handpump is stroked and fuel is drawn from the tank, with contaminants at the bottom. When sampling is completed, the tubing is emptied, rolled, and stowed with the pump on the gravity refueling door. Fuel sampling of the range extension fuel tanks is done in the same manner.

2-76. Engine Fuel System Selector Control.

Each fuel system has a selector valve which is manually operated through the ENG FUEL SYS selector lever on the overhead engine control quadrant (Figure 2-11). There is an ENG EMER OFF T-handle on each side of the quadrant which is arranged so that pulling the handle engages the ENG FUEL SYS selector lever, bringing it to OFF. The ENG FUEL SYS selectors are connected to the fuel selector valves with low-friction flexible push-pull cables. Each lever can be actuated to three positions: OFF, DIR, and XFD. With the selectors at OFF, the control valves are closed, allowing no fuel flow to the engines. When the selectors are moved forward to DIR, the selector valves are opened, providing fuel flow for each engine from its individual fuel tank. If a tank is empty, or you wish to equalize fuel in the tanks, the ENG FUEL SYS selector of the engine that normally feeds from the empty or low-level tank is moved to XFD. This connects that engine to the other tank through the crossfeed system. A check valve in each crossfeed line prevents air from an inoperative engine's fuel line crossing to the operating one.

2-77. Fuel Filter.

The engine fuel filter has a bypass valve and bypass warning device (Figure 2-9). The filter is mounted on the forward left side of the engine accessory gear box. An impending bypass warning is incorporated on the filter housing in the form of a popout button. The bypass valve opens to assure continuous fuel flow with a blocked filter. At the same time the valve opens, an electrical switch closes to activate the ENG 1 FUEL BYPASS or ENG 2 FUEL BYPASS caution message. Power to the bypass warning system is provided by the No.1 and No.2 dc primary buses through circuit breakers marked NO.1 ENG WARN LTS and NO.2 ENG WARN LTS, respectively.

2-78. Engine Fuel Prime System.

A toggle switch on the upper console, marked FUEL PUMP, APU BOOST, OFF, and FUEL PRIME (Figure 2-6), energizes the prime/boost pump and solenoid valves to each main engine fuel supply line and to the solenoid valve for the APU fuel feed system when moved to FUEL PRIME. An advisory message, marked PRI/BOOST PUMP ON, is displayed during this mode indicating the prime or

boost pump is on. This pump provides pressurized fuel to the APU fuel inlet port when the FUEL PUMP switch is moved to the APU BOOST position. Helicopter prime pump capacity is not enough to prime an engine when the opposite engine is running. Engines should therefore be primed individually with both engines off. The prime/boost pump is actuated and the engine prime valve is opened whenever the engine starter is operating. This provides fuel pressure to aid in a successful engine start. When engine speed reaches starter dropout speed, engine fuel prime valve will close and the prime/boost pump will also stop operating if the FUEL PUMP switch is OFF. Power to the prime boost system is from the battery bus through a circuit breaker marked FUEL PRIME BOOST.

2-79. Fuel Quantity Display.

The IASS measures continuously the fuel level in the main and external fuel tanks. The system consists of two tank sensor probes (one in each tank), a dual channel fuel quantity gage conditioner, and a dual channel low-level warning system. The tank sensors send a signal through the RTUs that is converted to digital readouts on the MFDs engine instrument display (Figure 5-2). Fuel values are displayed by total quantity, left and right quantities, and fuel flow rate to engine No.1 and engine No.2. The fuel system may be checked by pressing the FUEL IND TEST button on the lower console MISC SW panel. Pressing the FUEL IND TEST button causes the digital fuel readouts to decrease in value and the #1 FUEL TANK LO and #2 FUEL TANK LO caution messages will appear on the MFDs. When the button is pressed again, the digital readouts will return to their original values. The fuel quantity indicating system is powered by the No.1 ac primary bus through a circuit breaker marked MAIN FUEL QTY.

2-80. Fuel Low Caution Message.

Two low-level sensors, one on each fuel quantity probe, provide signals which activate a low-level caution message, #1 FUEL TANK LO or #2 FUEL TANK LO, when the fuel level decreases to about 172 pounds in each tank at a cruise attitude. The fuel-low caution messages are powered by the No.1 dc primary bus through a circuit breaker marked FUEL LOW WARN.

2-81. Fuel Boost Pump.

The helicopter fuel system contains an electrically-operated submerged fuel boost pump in each fuel tank. When the pumps operate, they provide pressurized fuel to the engine fuel inlet port. Each boost pump is controlled by a switch on the FUEL BOOST PUMP CONTROL panel

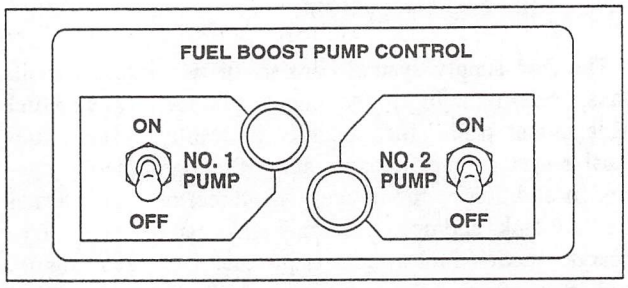

AK0103
SA

Figure 2-12. Fuel Boost Pump Control Panel

(Figures 2-7 and 2-12). A two-position switch for each pump marked NO.1 PUMP ON and OFF, NO.2 PUMP ON and OFF, activates the pump for continuous operation to maintain a head of fuel pressure at the engine fuel inlet port, regardless of engine boost pump discharge pressure. A pump-on advisory light near each control switch indicates pump operation. Boost pump light activation is controlled by the respective fuel pump pressure. Two advisory lights on the FUEL BOOST PUMP CONTROL panel indicates the respective pump is operating. A check valve in each pump discharge line prevents fuel recirculation during fuel boost operation, and prevents loss of engine fuel line prime. ENG 1 FUEL PRESS LO or ENG 2 FUEL PRESS LO caution message going on is also an indicator to turn on boost pumps. Boost pump operation is required when operating with JP-4 fuel. Pump operation should be limited to those conditions to minimize helicopter operation with pressurized fuel lines. Power to the boost pumps is provided from the No.1 and No.2 ac primary buses through circuit breakers on the cabin circuit breaker panel marked NO.1 FUEL BOOST PUMP and NO.2 FUEL BOOST PUMP, respectively. The following controls and indicators are located on the FUEL BOOST PUMP CONTROL panel:

CONTROL	FUNCTION
NO.1 or NO.2 PUMP switch	
ON	Turns on the respective fuel boost pump.
OFF	Turns off the respective fuel boost pump.

CONTROL	FUNCTION
Indicator lights	Illuminates when there is pressure in the respective fuel boost pump and that pump is operating properly.

2-82. Refueling/Defueling.

A pressure system allows refueling and defueling of all tanks from one point on the left side of the aircraft. Closed circuit refueling uses the pressure refueling system and its components. Either refueling or defueling of the internal auxiliary tanks is done simultaneously through the main tanks. Pressure refueling and defueling may be accomplished without electrical power or with electrical power and/or engines running. During ground refueling, the probe refuel valve is interlocked with the WOW switch to prevent the valve from opening and the probe from becoming pressurized. When FUEL MGT panel is in PROBE and AUTO, fuel probe valve is allowed to open. If the internal auxiliary and external tanks are to be refueled or defueled without electrical power, the INT AUX and MODE SEL switches on the FUEL MGT panel (Figures 2-7 and 4-27) must be placed at REFUEL and MANUAL respectively; the MAN EXT switch must by placed in FLOW prior to removing electrical power from the aircraft. Automatic fuel flow shutoff during refueling or defueling occurs in each tank as the tank is filled or emptied. Shutoff valves in the tanks are float-operated. During refueling, the high-level floats will close the fueling/defueling valve in the bottom of the tank. During defueling, the low-level float will close the fueling/defueling valve in the bottom of the tank. When defueling/transferring from external and internal tanks, fuel pumps must be turned off immediately after tanks are emptied. Gravity refueling of the main tanks is done through the gravity refuel port on each side of the fuselage. Gravity refueling of the extermal tanks is done through the gravity refuel port on the top of each tank. Gravity defueling of the main tanks can be through drains in the sump of each tank. The internal auxiliary tank cannot be gravity defueled since it has no sump drain.

2-83. Fuel Tank Jettison System.

CAUTION

Jettisoning of external tanks during level flight at an airspeed greater than 120 KIAS, during a descent (less than 500 feet per minute) at an airspeed greater than 70 KIAS, or during a descent greater than 500 feet per minute (e.g., in an autorotation) may cause damage to the aircraft/rotor system due to external tanks impact and should be avoided.

The jettison capability of the external tanks will eject both tanks simultaneously. The system consists of two squibs in each external tank support (ETS) and two guarded jettison switches on the FUEL MGT panel under the heading EXT TANK JETT. Both of the tanks are jettisoned by raising either or both EXT TANK JETT switch guards and placing the switches to the up (ON) position. No.1 dc primary power must be available for the left EXT TANK JETT switch to jettison tanks, and dc essential power must be available for the right EXT TANK JETT switch to jettison tanks. The tanks cannot be jettisoned when the aircraft weight is on its wheels. In addition, a safety pin for each tank opens a microswitch that disables the jettison circuit when inserted to prevent inadvertent jettison. The jettison circuits for external tank support racks receive power from the No.1 dc primary and dc essential buses. The bus provides power through two circuit breakers marked AUX JTSN LHS and AUX JTSN RHS, located on the copilot and upper console circuit breaker panels. The two squib circuits are electrically isolated from each other.

Section V FLIGHT CONTROLS

2-84. Flight Control Systems.

The flight control system consists of dual cyclic, collective, and pedal flight controls and an AFCS. Pilot control inputs are transferred from the cockpit to the main and tail rotors by mechanical linkages and dual-staged hydraulic servos. The AFCS includes a stability augmentation system (SAS), a digital automatic flight control system (DAFCS), and a stabilator control system. The Stabilator is controlled automatically by the AFCS or manually during stabilator system failure by the pilot from a cockpit switch. All other AFCS inputs are introduced directly into the flight control system through electromechanical and electro-hydromechanical actuators. Hydraulic power is provided from two independent sources, each of which is automatically backed up by the backup pump in the event of hydraulic system malfunction. Both the pilot's and copilot's flight controls, control grips, and control grip function switches are identical. A drawing of the collective and cyclic grips is presented in Figures 2-13 and 2-14.

2-85. Cyclic Stick.

Lateral and longitudinal control of the helicopter is by movement of the cyclic sticks through push rods, bellcranks, and servos to the main rotor. Movement in any direction tilts the plane of the main rotor blades in the same direction, thereby causing the helicopter to go in that direction. Each cyclic stick grip (Figure 2-13) contains the following switches:

CONTROL	FUNCTION
Cursor SELECT	Selects the mode or soft-key function on the MFD where the cursor is positioned (Figure 3-3).
Display Control CURSOR	Five position switch (left, right, forward/up, aft/down, and center/neutral) for moving the cursor on the pilot or copilot MFDs. Automatically centered, the thumb switch permits the pilot to slew the position cursor on that pilot's MFDs. Up/Down movement of the switch scrolls the cursor along the soft-key functions on the sides of the page displayed on the MFDs. A wrap around function is implemented for this vertical cursor motion so that when it reaches the bottom or top of the list, the cursor returns to the opposite end. Left/Right movement of the switch moves the cursor to the adjacent function on the present MFD page or to the adjacent function on the other display. A wrap around function is active between that crewmember's MFDs only.
EMER REL/Cable Cut	**WARNING** Before using the EMER REL switch to cut the rescue hoist cable or release the cargo load, be sure the other system is not ARMED. If both systems are ARMED when the EMER REL switch is activated, both loads will be released.

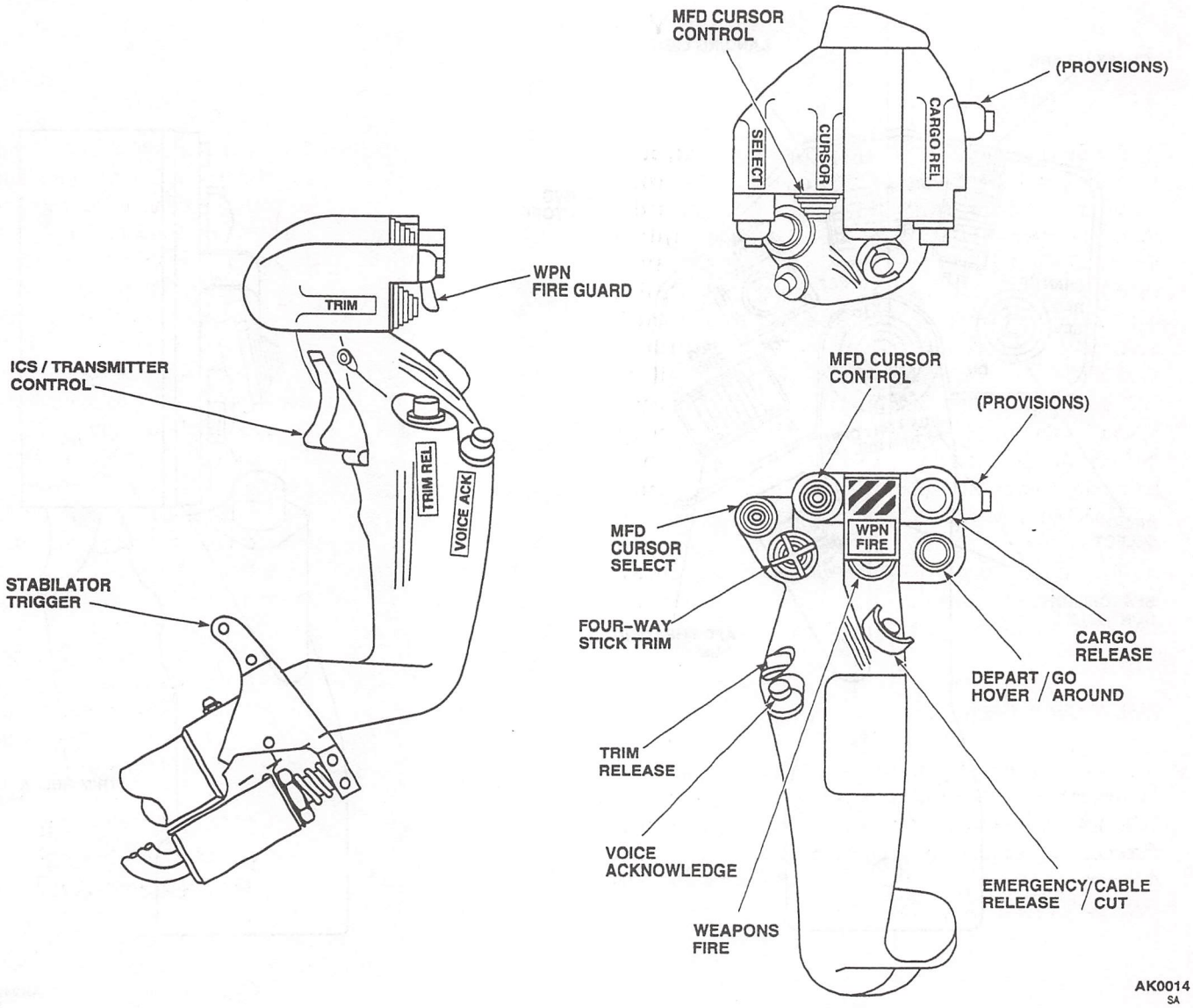

Figure 2-13. Cyclic Grip

CONTROL	FUNCTION	CONTROL	FUNCTION
	Provides emergency release function of the cargo hook or rescue hoist load when the CARGO HOOK CONTR ARMING switches are at CKPT or ALL and ARMED. Active cartridge for shear cable and/or cause piston to release lock on cargo hook.	CARGO REL	Provides normal release capability of the cargo load when the CARGO HOOK CONTR ARMING switches are at CKPT or ALL and ARMED.
		WPN FIRE Guard	Pushbutton for M134 minigun system fixed foward firing.

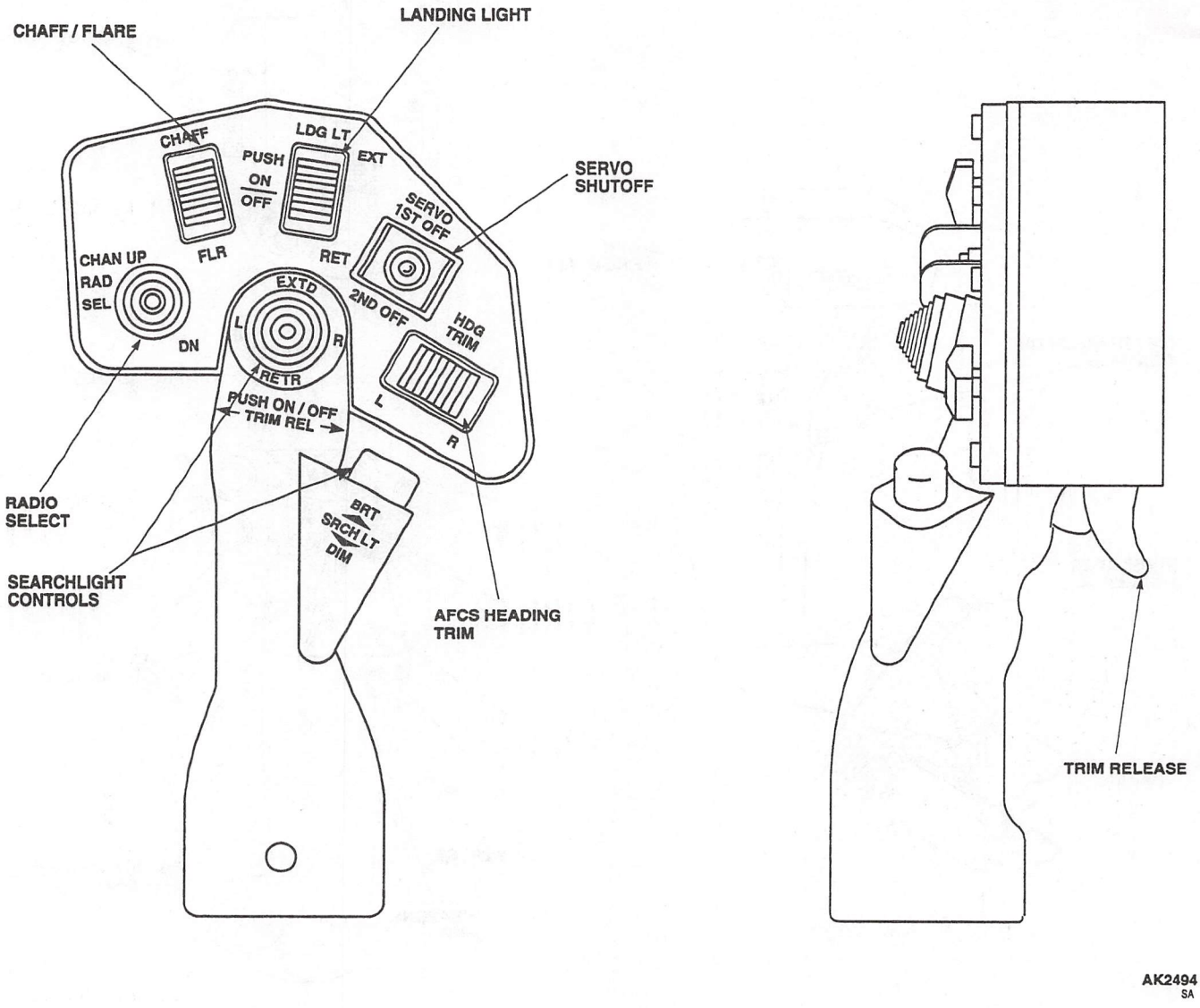

Figure 2-14. Collective Grip

CONTROL	FUNCTION
ICS/RADIO	Double detent switch. First detent keys ICS microphone for internal communication. Second detent keys microphone and active radio for external communication transmissions.
DEPART HOV/Go Around	Enables automatic departure from a hover mode or an automatic approach to a cruise airspeed of 100 KIAS and radar altimeter altitude of 500 feet. If the hover mode or the automatic approach feature has already been engaged, or if airspeed is less than 60 knots and autopilot is engaged, the automatic depart mode may be engaged by depressing the DEPART HVR pushbutton. Upon engagement, the aircraft accelerates at 2 knots per second and climbs at 480 feet per minute. At 100 KIAS, airspeed hold automatically engages, and at the radar altimeter altitude of 500 feet, radar altitude hold automatically engages. Depressing the DEPART HVR pushbutton a second time will disengage automatic depart mode and engage radar altitude hold. If the second actuation of the depart switch occurred when the aircraft airspeed is greater than 60 knots, the DAFCS will maintain airspeed. If airspeed is less than 60 knots, then pitch attitude will be maintained.
VOICE ACK	Resets MASTER CAUTION PRESS TO RESET lights and turn off voice message. (Pressing the VOICE ACK button when the MASTER CAUTION PRESS TO RESET is not illuminated will cause the MASTER CAUTION PRESS TO RESET lights to flash.)
TRIM REL	Releases trim reference and stick gradient forces.
TRIM	Five position switch (left, right, forward/up, aft/down, and center/neutral) for trimming out cyclic control forces. Automatically centered, the switch is pushed in the opposite direction of the control forces. The beeper will drive the cyclic trim to neutralize the forces.
Stabilator Trigger Switch	Slews the trailing edge of the stabilator up and overrides all automatic functions.

Refer to major systems for a complete description and use of the switches on the cyclic grip.

2-86. Collective Pitch Control Stick.

The collective sticks change the pitch of the main rotor blades, causing an increase or decrease in lift on the entire main rotor disc. The copilot's stick telescopes by twisting the grip and pushing the stick aft to improve access to his seat. Each collective stick has a grip (Figure 2-14) with switches and controls for various helicopter systems. These switches are:

CONTROL	FUNCTION
Radio Select	Allows the pilot to select a radio and preset frequency. Selection is displayed on MFDs.
RAD SEL	Moving radio select switch left or right will sequence through seven selectable radios.
CHAN	
UP	Sequences through channel presets in increasing order, one preset per activation.
DN	Sequences through channel presets in decreasing order, one preset per activation.

CONTROL	FUNCTION
CHAFF/FLR Switch	
CHAFF	Ejects the currently programmed number of chaffs in the PROG mode, or a single chaff in the MAN mode.
FLR	Ejects the currently programmed number of flares in the PROG mode, or a single flare in the MAN mode.
LDG LT Switch	
PUSH ON/OFF	Turns landing light on or off.
EXT	Moves landing light away from stowed position.
RET	Moves landing light toward stowed position.
SERVO Switch	
1ST OFF	Turns off first stage servo system.
2ND OFF	Turns off second stage servo system.
HDG TRIM Switch	
L	Turns the aircraft left at 3° per second below 60 KIAS or 1° per second above 60 KIAS, when AUTO PLT is engaged on the AFCS CONTROL panel.
R	Turns the aircraft right at 3° per second below 60 KIAS or 1° per second above 60 KIAS, when AUTO PLT is engaged on the AFCS CONTROL panel.
TRIM REL	Trigger switch at the bottom rear of the collective grip that releases the current collective trim reference position and gradient forces.
SRCH LT Switch	Controls the search light intensity in the NVG mode only. (NORMAL/BYPASS switch under the copilot seat determines mode. NORMAL position - NVG, BYPASS - Day/night. Bulb must be changed and filter added for NVG operation.)
BRT	Increase searchlight intensity in the NVG mode.
DIM	Decrease searchlight intensity in the NVG mode.
Searchlight Switch	
PUSH ON/OFF	Turns searchlight on or off.
L	Moves searchlight to the left.
R	Moves searchlight to the right.
EXTD	Moves searchlight away from stowed position.
RETR	Moves searchlight toward stowed position.

All switches with exception of trim release are within easy reach of the left thumb. Trim release switch is actuated by the forefinger. For a complete description of switches and controls, refer to major system description.

2-87. Mixing Unit.

A control mixing unit provides mechanical control mixing functions which eliminate inherent control coupling. Collective to yaw mixing provides increased tail rotor pitch with increased collective, and vice versa. Collective to longitudinal mixing counters effects of rotor downwash on the stabilator. Collective to roll mixing provides left lateral input with increased collective to counter the right rolling moment due to tail rotor thrust. Yaw to longitudinal mixing

provides for an aft longitudinal cyclic with a left pedal input to counteract the pitching moment resulting from the vertical thrust component of the canted tail rotor.

2-88. Control Mixing.

The cyclic, collective, and pedal controls are mechanically combined in the mixing unit to produce uncoupled airframe response characteristics. The mechanical control mixing is presented in Table 2-3. In addition to the mechanical mixing, electrical collective-to-yaw mixing is also present when trim is engaged. Control outputs from the mixing unit are transferred directly to the three dual-stage primary servos and to the tail rotor control system. The electrical collective/airspeed to yaw mixing varies between 40 and 100 KIAS, and is proportional to collective position and airspeed. The primary servos are mounted longitudinally on the upper deck rather than vertically on the transmission. Outputs from the primary servos are rotated 90 degrees upward and transferred to the swashplate assembly. Control movements from the swashplate assembly are transferred to the main rotor blade pitch change rods, which change the main rotor blade pitch setting. Tail rotor control input from the mixing unit and forward quadrant are then transferred by two cables, one on each side of the aircraft, to the tail rotor control quadrant mounted on the tail rotor gear box. The tail rotor quadrant has two tension springs to allow full yaw control if either of the tail rotor control cables is severed. If both cables are severed, two separate centering springs will center the tail rotor servo pilot valve, thus positioning the tail rotor to a neutral setting (10.7°) to provide a "fly home" capability. Control output from the tail rotor quadrant is transmitted to the tail rotor dual-stage servo which controls the position of the pitch change shaft. This shaft extends through the tail rotor gear box and is connected to the pitch change beams. The beams connect to the blade pitch links, positioning the tail rotor blades. Tail rotor controls are powered by the No.1 or backup hydraulic system.

2-89. Tail Rotor Control.

WARNING

If the helicopter is shut down and/or hydraulic power is removed with one tail rotor cable failure, disconnection of the other tail rotor cable will occur when force from the boost servo cannot react against control cable quadrant spring tension. The quadrant spring will displace the cable and boost servo piston enough to unlatch the quadrant cable.

The tail rotor control system determines helicopter heading or yaw by controlling the pitch of the tail rotor blades. Inputs by the pilot or copilot to the control pedals are connected through a series of control rods, bellcranks, yaw boost servo, mixing unit, cables, and quadrants to the tail rotor servo. The tail rotor is actuated mechanically, but hydraulic pressure is required to operate the pitch change shaft which moves the tail rotor pitch change beam, changing blade pitch angle. The pitch change shaft extends through the tail rotor gear box. Mechanical linkages are used throughout the system for directional control between the mixer and the tail rotor servo. The tail rotor controls are powered by the No.1 or backup hydraulic systems. The tail rotor quadrant mounted on the tail rotor gear box transmits tail rotor cable movement into the tail rotor servo. Two spring cylinders connected to the quadrant actuate microswitches to turn on the TR QDRNT FAIL caution message, if either tail rotor cable becomes severed. The springs allow the quadrant to control the tail rotor in the direction of cable failure against the remaining cable tension via normal cable arrangement. The pilot continues directional control of the aircraft normally. Electrical power to the warning system is provided by the No.1 dc primary bus through a circuit breaker marked T RTR SERVO WARN on the copilot circuit breaker panel.

2-90. Tail Rotor Pedals.

The pedals contain switches that, when pressed, disengage the heading hold feature of AFCS below 60 KIAS. Adjustment for pilot leg length is done by pulling a T-handle, on each side of the instrument panel, marked PED ADJ. The pedals are spring-loaded and will move toward the operator when unlocked. Applying pressure to both pedals simultaneously will move the pedals for desired leg position. The handle is then released to lock the pedal adjusted position.

2-91. Flight Control Servo Systems.

The servos are mounted on the upper deck above the cabin area forward of the main gear box in the control access. Three main rotor servos with two independent redundant stages have only the input linkage in common. Should one stage become inoperative due to pressure loss, a bypass valve within depressurized stage will open, preventing a hydraulic lock. Tail rotor control loads are reacted by a two-stage tail rotor servo mounted on the tail gear box. With the TAIL SERVO switch at NORMAL, the first stage of this servo is powered by the NO.1 hydraulic system; the second stage is powered by the backup system when the switch is at BACKUP. Should the first stage become inoperative, the backup pump will come on and power the second stage. All aerodynamic loads are then reacted by the

Table 2-3. Control Mixing

REQUIREMENT	CAUSE	COMPENSATION	NAME
		Mechanical Compensation	
Nose yaws right when collective is increased	Main rotor torque	Tail rotor thrust is increased	Collective to yaw
Helicopter drifts right when collective is increased	Translating tendency	Rotor disc is tilted left	Collective to lateral
Nose pitches up and helicopter drifts aft when collective is increased	Rotor downwash on stabilator	Rotor disc is tilted forward	Collective to longitudinal
Nose pitches down and helicopter drifts forward when left pedal is applied	Tail rotor lift vector	Rotor disc is tilted aft	Yaw to longitudinal
		Electronic Compensation	
Nose yaws left as airspeed increases	Camber of tail rotor pylon varies side load with airspeed	A portion of the main rotor torque compensation is provided by a trim input that is proportional to collective position and airspeed. The trim input is then progressively washed out as pylon side loads increase with airspeed. The electrical collective/airspeed to yaw mixing varies between 40 and 100 KIAS, and is proportional to collective position and airspeed.	Collective/airspeed to yaw

second stage. Electrical interlocks prevent both flight control servos from being turned off simultaneously. The servo switches marked SERVO 1ST OFF and 2ND OFF are on the pilot and copilot collective stick grips (Figure 2-14). If the input pilot valve to the servo becomes jammed, bypass automatically occurs. Automatic bypass is indicated to the pilots by the associated primary servo pressure low caution message illuminating on the MFDs during flight control movements. The servo pressure low caution message will go off when the flight controls are stationary.

2-92. Flight Control Servo Switch.

First and second stage primary servo systems are controlled by the servo switch marked SERVO on the pilot's and copilot's collective stick grips (Figure 2-14). The marked switch positions are 1ST OFF and 2ND OFF. The servo systems normally operate with the switch in the unmarked center (on) position. To turn off the first stage primary servos, the SERVO switch is placed to 1ST OFF. To turn off the second stage servo, the switch is placed to 2ND OFF. The systems are interconnected electrically so that regardless of switch position, a system will not shut off unless there is at least 2350 psi in the remaining system. The servo shutoff valve operates on current from the No.1 and No.2 dc primary buses through circuit breakers marked NO.1 SERVO CONTR and NO.2 SERVO CONTR on the copilot's and pilot's circuit breaker panels, respectively.

2-93. Flight Control Servo Low-Pressure Caution Message.

The first stage, second stage, and tail rotor servo hydraulic low-pressure caution messages are PRI SERVO #1 PRESS LO, PRI SERVO #2 PRESS LO, and #1 TAIL SERVO FAIL, and will go on if the pressure is below its respective switch setting, or if the servo pilot valve becomes jammed. The servo switches and warning lights operate on direct current from the No.1 and No.2 dc primary buses through circuit breakers, marked NO.1 SERVO WARN and NO.2 SERVO WARN on the copilot's and pilot's circuit breaker panels, respectively. Power for the tail rotor servo warning is provided by the No.1 dc primary bus through a circuit breaker marked T RTR SERVO WARN on the copilot's circuit breaker panel.

2-94. Pilot-Assist Servos.

The pilot-assist servo assembly contains the collective, yaw, and pitch boost servos, three SAS actuators (pitch, roll, and yaw), and the pitch and roll trim actuators. The collective, yaw, and pitch boost servos are installed between the cockpit control forces and SAS system feedback. The controls are operable without hydraulic pressure to the pilot-assist servos, but the control forces to move the collective and directional controls are larger. Hydraulic power is still required to move the primary servos. The SAS actuators convert SAS corrections into flight control system actuations. The pilot-assist servos, except pitch and roll trim, are turned on and off by pressing the button marked SAS/BOOST on the AFCS CONTROL panel (Figure 2-15). Hydraulic pressure to the pitch and roll trim actuators is reduced to 1,000 psi and is turned ON or OFF by the TRIM button on the AFCS CONTROL panel. Normally powered by the No.2 hydraulic system, the pilot-assist servos may be powered by the backup hydraulic system in the event of a No.2 hydraulic system malfunction.

2-95. Boost Servos.

There are three boost servos (collective, yaw, and pitch) installed between the cockpit controls and mixing unit, which reduce cockpit control forces. The boost servos are turned on and off by pressing the button marked SAS/BOOST on the AFCS CONTROL panel (Figure 2-15). The boost turn off and SAS turn off valves receive power from the dc essential bus through a circuit breaker marked SAS BOOST on the upper console.

2-96. Trim Servos.

The flight control system uses electromechanical trim servos in the yaw and collective axis to provide a trim reference to the collective stick and pedals. The reference position is set by engagement of a clutch on the servo feedback loop. Once established, this reference position can be moved by command from the AFCS computer. This mechanism is used to apply outer loop AFCS inputs to the control system. The collective and yaw trim force gradients and breakouts are established by a preloaded spring within each actuator. The collective and yaw trim servos also contain damper mechanisms to smooth pilot inputs to the control system. The pitch and roll axis use electrohydraulic servos to accomplish the equivalent function for the cyclic axis. In these axis, the trim reference is established by the position of a hydraulic piston controlled by an electrohydraulic servo valve. The pitch boost function is incorporated in the pitch trim servo.

2-97. Automatic Flight Control System.

The AFCS enhances the stability and handling qualities of the helicopter. The AFCS is composed of three major subsystems: (1) the stability augmentation system, (2) the stabilator system, and (3) the digital automatic flight control system. All engagement controls for the three subsystems are contained on the AFCS and STABILATOR control panels (Figure 2-15). Each subsystem operates independently of the other and complements the others. Autopilot functions are engaged by the AUTO PLT pushbutton on the AFCS CONTROL panel. The AFCS system provides the following features:

1. Pitch, roll, and yaw stability augmentation
2. Stabilator control
3. Cyclic, collective, and pedal trim
4. Pitch and roll attitude hold
5. Airspeed hold
6. Heading hold
7. Barometric altitude hold
8. Radar altitude hold
9. Pitch and roll hover augmentation/gust alleviation
10. Turn coordination
11. Maneuvering stability
12. Automatic approach to hover
13. Hover
14. Crew hover
15. Automatic depart
16. Longitudinal stick gradient augmentation (Pitch Bias Actuator)
17. Automatic preflight check
18. Fault detection and annunciations.

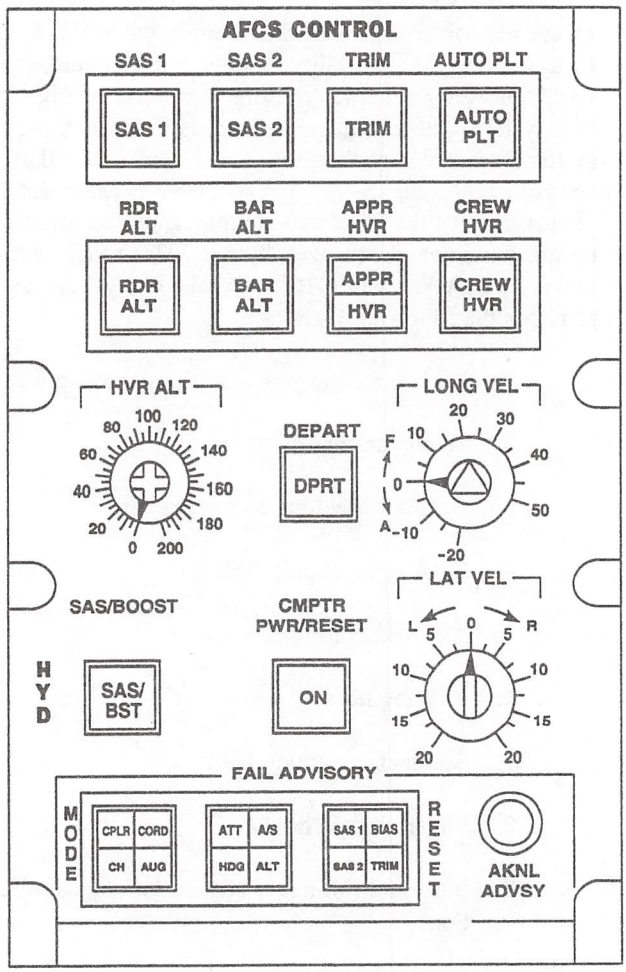

AFCS CONTROL PANEL

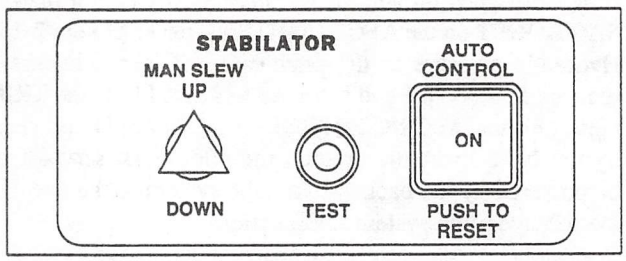

STABILATOR CONTROL PANEL

AK0015
SA

Figure 2-15. AFCS and STABILATOR Control Panels

2-98. AFCS Controls.

The AFCS is controlled from two panels: the AFCS CONTROL panel and STABILATOR control panel. Both control panels are located on the lower center console and are illustrated in Figures 2-7 and 2-15. Controls and functions of the AFCS panel are summarized in Table 2-4. Table 9-1 contains descriptions of the fail advisory lights displayed on the AFCS CONTROL panel. The stabilator control panel contains all the operating controls for the stabilator. All other AFCS controls are on the AFCS CONTROL panel. All detectable AFCS mode failures, except for the stabilator, illuminate the AFCS DEGRADED caution message on the MFDs and the appropriate mode failure capsule on the failure advisory section of the AFCS CONTROL panel. Stabilator failures illuminate the STABILATOR FAIL caution message on the MFDs and generate an aural warning tone and message in the pilot's and copilot's headsets.

2-99. Digital Automatic Flight Control System (DAFCS)

The central component of the DAFCS is the digital AFCS computer. The computer commands the pitch bias actuator (PBA), the inner-loop SAS actuators, and the outer-loop trim actuators in all four control channels. The computer also provides self-monitoring, fault detection and

failure advisory. The DAFCS employs two types of control, identified as inner-loop and outer-loop. The inner-loop (SAS) provides rate damping to improve helicopter stability. This system is fast in response, limited in authority, and operates without causing movement of the flight controls. The outer-loop (autopilot) provides long term inputs by moving the flight controls trim reference to the position required to maintain the selected flight condition. It is capable of driving the flight controls throughout their full range of travel (100% authority) at a limited rate of 10% per second. Both inner and outer loops allow for complete pilot override through the normal use of the flight controls. The DAFCS computer processes incoming information from various sensors aboard the aircraft and stores this information in its memory. The sensor information is used by the computer central processing unit (CPU) to compute required correction signals. Inner-loop correction signals are routed to the SAS actuators and outer-loop signals are routed to trim servos and actuators.

Table 2-4. AFCS CONTROL Panel

CONTROL	FUNCTIONAL DESCRIPTION
SAS 1	Momentary action pushbutton switch that activates or deactivates SAS 1 electronics system. SAS 1 legend on switch lights green when system is on and extinguishes when it is off.
SAS 2	Momentary action pushbutton switch that activates or deactivates SAS 2 electronics system. SAS 2 legend on switch lights green when system is on and extinguishes when it is off.
TRIM	Momentary action pushbutton switch that activates or deactivates all control trim systems (Pitch, roll, yaw, and collective). TRIM legend on switch lights green when trim systems are active and extinguishes when they are off.
AUTO PLT	Momentary action pushbutton switch that turns automatic pilot on and off. SAS 1 and/or SAS 2 are required to be engaged in order to engage autopilot. If trim is disengaged, it will engage automatically upon engagement of autopilot. The AUTO PLT light will illuminate on the AFCS CONTROL panel when autopilot is engaged.
APPR HVR	Momentary action split screen, pushbutton switch which engages either automatic approach or hover mode dependent on aircraft flight condition.
CREW HVR	Momentary action pushbutton switch which activates the crew hover inputs from the grip on the HOVER TRIM CONTROL panel while hover mode is engaged.
DEPART	Illuminates when DPRT mode is selected by the cyclic grip DEPART HOV switch.
LONG VEL F A	Potentiometer with tactile shape coded knob that permits pilots to set a reference longitudinal velocity in auto hover mode of operation (forward and aft).
LAT VEL L R	Potentiometer with tactile shape coded knob that permits pilots to set a reference lateral velocity during automatic hover (left and right).
CMPTR PWR/RESET	Alternate action, guarded pushbutton switch which activates DAFCS computer power and provides power on/reset capability if the computer automatically shuts down due to a self-diagnosed malfunction.
SAS/BOOST	Alternate action guarded pushbutton switch that lights when pilot-assist servo and SAS servo hydraulic systems are activated.
HVR ALT	Potentiometer with tactile shape coded knob that permits pilots to set a reference hover altitude while hover mode is engaged.

Table 2-4. AFCS CONTROL Panel (Cont)

CONTROL	FUNCTIONAL DESCRIPTION
RDR ALT	Momentary action pushbutton switch that engages and disengages the radar altitude hold system. Reference altitude is obtained from HVR ALT potentiometer only when auto hover mode is on. When hover mode is off, the reference altitude is established when the mode is initially engaged, or at the point the collective trim switch is released with the mode engaged. RDR ALT also illuminates when the APPR HVR switch is pressed.
BAR ALT	Alternate action pushbutton switch that engages and disengages barometric altitude hold. Altitude is referenced automatically when the mode is initially engaged, or at the point when collective trim switch is released with the mode engaged.

2-100. Pitch Bias Actuator (PBA).

WARNING

When flying with the AFCS CONTROL panel FAIL ADVISORY BIAS light on, up to 1.5 inches of forward or aft cyclic control authority may be lost.

The PBA provides longitudinal cyclic static position displacement stability in response to pitch rate, pitch attitude and airspeed inputs. The PBA is an electromechanical series actuator with ±15% control authority and ±3% per second rate limit between 80 and 180 knots airspeeds . The PBA functions automatically upon application of power to the DAFCS computer and is not selectable on the AFCS CONTROL panel. The DAFCS computer monitors the PBA position to confirm correct response to the input commands. If the PBA fails, the DAFCS lights the BIAS advisory light on the AFCS CONTROL panel and displays the AFCS DEGRADED message on the MFDs and commands the PBA to a predetermined position depending on the type of failure. If the system malfunctions, the FAIL ADVISORY BIAS light on the AFCS CONTROL panel will go on and in some cases remove power from the actuator. If the malfunction that caused the shutdown goes away, the actuator operation can be reset by pressing any of the three MODE RESET buttons. Pitch bias failure modes are:

1. Attitude failure: Bias actuator centered.
2. Pitch rate failure: Faded out pitch rate component.
3. Airspeed failure: Actuator goes to 120 KIAS position, and attitude and rate functions continue to operate.
4. Actuator failure: Power removed from actuator.

2-101. Stability Augmentation System (SAS).

SAS provides improved dynamic stability by sensing motion in the pitch, roll, and yaw axis, and applying opposing inputs to the corresponding axis. The SAS is an inner-loop system with two separate and independent SAS channels. SAS channel No.1 is an analog system; SAS channel No.2 is a digital system and is part of the DAFCS computer. Both SAS channels function identically except for the hover augmentation/gust alleviation, approach, hover, and depart DAFCS features, which are incorporated only into SAS 2. Both SAS 1 and SAS 2 also complement the DAFCS to provide turn coordination and roll attitude hold. With both channels engaged, pitch, roll, and yaw SAS actuators have ±10% control authority with each channel providing ±5%. Only SAS 2 commands the collective inner loop SAS actuator. The collective inner loop only operates in RDR ALT, BAR ALT, APPR, HVR, and DEPART modes, and is limited to ±10% control authority. Hydraulic pressure to the SAS actuators are turned on/off by the SAS/BOOST switch on the AFCS CONTROL panel. This controls power to the SAS shutoff valve on the pilot-assist module. A loss of SAS actuator pressure is monitored by the SAS pressure switch which illuminates the SAS FAIL caution message. SAS 1 and SAS 2 may be operated separately or simultaneously. In each control axis (except vertical), command signals from both SAS channels are applied simultaneously to separate coils of an electrohydraulic servovalve. The two signals are summed to provide a single input into the flight control system through a single series SAS actuator. The operation of the SAS channels is continuously monitored by the DAFCS. If either of the two SAS channels malfunctions, the AFCS DEGRADED caution message on the MFDs will illuminate and the appropriate SAS fail advisory light on the AFCS CONTROL panel is illuminated. If SAS 2 has failed, the computer will automatically disengage the axis. If SAS 1 has failed, the pilot must disengage the failed SAS 1 channel from the AFCS CONTROL panel. The remaining SAS channel is limited to ±5% authority but operates at twice its normal gain to compensate for the failed SAS channel. Either SAS

channel can be disengaged by pressing the appropriate SAS button on the AFCS CONTROL panel. If both SAS 1 and SAS 2 lose power, manually shut down, or hydraulic pressure is lost to the actuators, the SAS FAIL caution message will illuminate.

2-102. Trim System.

The parallel trim actuator assemblies provide flight control force gradients, detent positions, and the outer-loop autopilot control functions. The trim actuators command full control authority in all four control channels but are rate-limited to 10% per second. Pressing a trim release switch (cyclic, collective, or pedals) disengages the respective trim function and allows free control motion. Releasing the trim release switch reengages trim. For yaw trim release above 60 knots, any one of the four pedal microswitches and cyclic trim switch must be pressed. Below 60 knots, any one of the pedal microswitches has to be pressed. If the trim system fails, the TRIM fail advisory light on the AFCS CONTROL panel will illuminate and the pilot can compensate for the failure. The pilot is able to override the trim control forces in all channels.

2-103. Autopilot.

The autopilot maintains helicopter pitch and roll attitude, heading during hover or forward flight, and provides a coordinated turn and airspeed hold feature at airspeeds above 60 knots. The autopilot function is engaged by pressing the AFCS CONTROL panel SAS 1 or SAS 2 switches, TRIM switch, and then pressing the AUTO PLT pushbutton. Selecting AUTO PLT will engage TRIM, if not previously selected. The autopilot may be disengaged by pressing the AUTO PLT pushbutton on the AFCS CONTROL panel.

2-104. Attitude and Airspeed Hold.

During autopilot operation, attitude hold is provided in the pitch and roll axis. The autopilot automatically retains the attitude at which the function was engaged. If the pilot desires to change pitch or roll attitude, he may press the cyclic TRIM REL switch to release cyclic trim forces and outer loop inputs from the AFCS. At this time, the helicopter may be manually flown to a new attitude, the switch released, and this new attitude maintained as a reference. Alternately, the pilot may use the four way cyclic TRIM (beeper) switch which commands changes to the attitude reference of approximately 6° per second in the roll direction or 6 knots per second in the pitch direction, direction of change depends upon which direction the TRIM switch is pressed. In addition to roll attitude hold, an automatic wing leveling feature is provided in the roll axis. During transitions from hover to forward flight, as the helicopter accelerates through 60 knots airspeed, this feature automatically retrims helicopter attitude from normal left wing low hover attitude to level flight and maintains this attitude until subsequent changes are made by the pilot. The AUTO PLT feature also provides airspeed hold above 60 knots. In this mode, airspeed becomes the primary pitch axis reference. The cyclic TRIM switch may be used to command changes to the airspeed reference.

2-105. Heading Hold.

The yaw channel of the autopilot provides the heading hold feature for hover and forward flight and is engaged whenever the AUTO PLT pushbutton is illuminated. Heading hold is an outer-loop function operating through the yaw trim actuator, and therefore will only be operational whenever the yaw trim is engaged. Releasing all pedal switches at a given heading synchronizes the system to the established heading. The yaw autopilot also uses a collective stick position sensor to reduce heading excursions caused by main rotor torque changes. The collective stick position input is modified by an airspeed function which reduces its gain as airspeed increases. When heading hold is engaged, the HDG TRIM switch on the collective allows the pilot to make heading changes without retrimming. Below 60 KIAS, the aircraft is slewed at 3° per second. Above 60 KIAS, actuation of the switch for less than 1 second provides a 1° heading change and actuation for greater than 1 second provides a 1° per second coordinated turn. The heading hold is reengaged following a turn when the following conditions are maintained for 2 seconds:

1. Aircraft roll attitude is within 2° of wing level.
2. Yaw rate is less than 2° per second.

Heading hold is disengaged by the WOW switch when the aircraft is on the ground.

2-106. Altitude Hold.

CAUTION

The PUSH-TO-TEST function on the radar altimeter is not inhibited while in flight. Pressing the PUSH-TO-TEST knob when radar altitude hold is active will deactivate radar altitude hold and engage barometric altitude hold.

NOTE

If the PUSH-TO-TEST knob is pressed when radar altitude hold is active, the AFCS CONTROL panel RDR ALT light will extinguish and BAR ALT light will illuminate. The FAIL ADVISORY MODE RESET ALT and CPLR lights will flash and the AFCS DEGRADED caution message will be displayed on the MFDs.

Normal operation of radar altitude hold, automatic approach to hover, hover coupler, and depart modes requires proper operation of the radar altimeter. If during operation of any of these modes, a radar altitude unreliable signal or an erratic altitude signal is generated, the radar altimeter becomes unreliable. An AFCS DEGRADED caution message will appear on the MFDs and the AFCS CONTROL panel FAIL ADVISORY CPLR and ALT lights will illuminate.

Either barometric or radar altitude hold is selectable from the AFCS CONTROL panel (but not simultaneously). When either altitude hold mode is selected, the DAFCS computer uses as a reference altitude the existing altitude from either the air data transducer if barometric altitude hold is selected or the radar altimeter if the radar altitude hold is selected. The computer commands both the collective SAS actuator and the collective trim actuator to maintain the reference altitude. The SAS actuator provides fast response, limited authority correction, and the trim actuator provides rate limited full authority corrections. The DAFCS computer uses altitude and rate from the barometric or radar altitude systems (depending on which hold mode is selected) and vertical acceleration to command the collective SAS and trim actuators. Barometric altitude hold is engaged at any altitude and airspeed by depressing the BAR ALT pushbutton with SAS 2 and autopilot engaged. Depressing the collective TRIM REL button temporarily disengages the mode. Upon release of the TRIM REL switch, barometer altitude hold automatically reengages and maintains the altitude at the time of reengagement. Radar altitude hold may be engaged anytime a valid radar altitude signal is received (approximately from 0 to 1,500 feet AGL), and at any airspeed by depressing the RDR ALT pushbutton with SAS 2 and autopilot engaged. When using the AFCS hover mode, altitude hold is referenced to the altitude selected on the AFCS CONTROL panel HVR ALT potentiometer. Depressing collective TRIM REL switch, temporarily disengages the mode. Upon release of the trim switch, radar altitude hold automatically reengages to the altitude selected on the AFCS CONTROL panel HVR ALT potentiometer. When in the hover mode, transition from one altitude to another is made with the HVR ALT potentiometer on the AFCS CONTROL panel. Resulting climb/descent rates are limited to 1000/500 feet per minute, respectively. If the radar altitude mode fails while engaged, barometric altitude hold is automatically engaged. If the PUSH-TO-TEST knob is inadvertently pressed while radar altitude is engaged, the FAIL ADVISORY MODE RESET ALT and CPLR lights must be pressed, then radar altitude reengaged. Integrated vertical acceleration provides short radar altitude rate corrections and rate information derived from the radar altitude provides long term updates.

2-107. Hover Augmentation/Gust Alleviation.

An additional feature of SAS, provided only through SAS 2, is Hover Augmentation/Gust Alleviation. It further improves aircraft stability at low airspeed using attitude retention and longitudinal and lateral acceleration to reduce drift.

2-108. Turn Coordination.

Automatic turn coordination is provided at airspeeds greater than 60 knots. Turn coordination allows the pilot to fly a coordinated turn with yaw control provided by the AFCS. The AFCS uses lateral acceleration and roll rate to determine if the helicopter is in out-of-balance flight, and provides the yaw SAS and yaw trim with the inputs necessary to automatically maintain a coordinated turn. Automatic turn coordination is engaged and heading hold disengaged when roll attitude is greater than 1° and any of the following conditions exist:

1. Lateral cyclic force greater than that resulting from 3% stick displacement from trim.
2. Cyclic trim release is pressed.
3. Roll attitude is beeped beyond 2.5° bank angle.

Actuation of the collective mounted heading trim for greater than 1 second provides a 1° per second coordinated turn.

2-109. Maneuvering Stability.

The pitch trim system operates in conjunction with the AFCS, stabilator control system, and pitch bias actuator to enhance maneuvering stability by requiring the pilot to apply increasing aft cyclic force against trim to maintain level flight as angle of bank and load factor increase. The AFCS moves the pitch trim reference position 1% forward for each 1.5° angle of bank, between 30 and 75 degrees. At 75° angle of bank, the longitudinal cyclic force is equivalent to

that resulting from 30% of cyclic displacement from trim. Whenever AUTO PLT is engaged, maneuvering stability is engaged.

2-110. Automatic Approach to Hover.

WARNING

A malfunction in the engine torque indication system may result in false high torque indications for both engines and false high torque signals to the AFCS. This may result in degraded system performance such that the AFCS does not provide the required collective input. The pilot must monitor AFCS performance to confirm appropriate responses.

The DAFCS provides the capability to perform an automatic approach (Figure 2-16) to a longitudinal and lateral groundspeed selected on the LONG VEL and LAT VEL control knobs on the AFCS CONTROL panel and to any radar altitude selected on the HVR ALT control knob, between 40 feet and 200 feet. If the HVR ALT is set below 40 feet, the approach will be made to 40 feet and then continued to the HVR ALT setting on the AFCS CONTROL panel when the mode is switched from APPR to HVR. The automatic approach can be initiated at any airspeed with a valid radar altimeter altitude, SAS 2, TRIM, and AUTO PLT engaged by activating the automatic approach pushbutton (APPR/HVR) on the AFCS CONTROL panel. The automatic approach function first commands the aircraft to decelerate or descend until the approach profile conditions are met. If the approach mode is selected when the aircraft is below the approach profile, the DAFCS commands the aircraft through the longitudinal trim actuator to decelerate at 1 knot/second while in the radar altitude hold mode until the approach conditions are met. If the approach mode is selected when the aircraft is above the approach profile, the DAFCS commands the aircraft through the collective trim actuator to descend at 360 feet/minute when the aircraft is more than 50 feet above the approach profile and greater than 60 knots groundspeed or at 120 feet/minute when the aircraft is less than 50 feet above the profile or less than 60 knots groundspeed, using the radar altimeter signal for reference until the approach profile conditions are met. When the approach profile conditions are met, the aircraft simultaneously decelerates at 1 knot/second and descends at 120 feet/minute. This profile is maintained until the aircraft comes within 2 knots of the selected longitudinal ground speed and comes to within 2 feet of the selected radar altitude. At this point, the hover mode automatically engages. In very calm water conditions where the Doppler return signal is unreliable and the Doppler goes into memory, a no Doppler approach is possible. In this condition the pilot flies the cyclic control, and the AFCS controls the rate of descent. A summary of automatic approach malfunctions is contained in Table 2-5.

2-111. Hover Coupler.

The hover mode provides longitudinal and lateral ground speed control and stabilization about the selected ground speed, and automatic altitude retention. The longitudinal and lateral ground speed and the altitude are selectable on the AFCS CONTROL panel. Longitudinal and lateral ground speed can also be beeped ±10 knots from the ground speed selected on the AFCS CONTROL panel with the cyclic TRIM switch. The hover mode is engaged automatically at the termination of the automatic approach; or can be engaged manually when the aircraft is within 5 knots of the longitudinal ground speed set on the LONG VEL potentiometer by pressing the APPR/HVR button on the AFCS CONTROL panel with SAS 2, TRIM, and AUTO PLT engaged. After engagement, the aircraft accelerates to the longitudinal and lateral ground speeds selected on the AFCS CONTROL panel. Radar altitude hold engages automatically if the aircraft altitude is within 2 feet of the altitude selected on the HVR ALT control knob. If the aircraft altitude is higher or lower than the set altitude, a descent or ascent will be commanded until the set altitude is reached, at which time the radar altitude hold will engage. Pressing and releasing the cyclic TRIM REL will remove cyclic TRIM switch inputs, returning the aircraft to the LONG VEL and LAT VEL setting on the AFCS CONTROL panel. Because of Doppler noise, short term longitudinal and lateral ground speed is obtained from integrated longitudinal and lateral inertial acceleration. Long term correction is obtained from the Doppler sensor using a 14 second filter.

NOTE

During a coupled hover in high winds, it is possible to indicate airspeeds greater than 60 knots. Under these conditions, if cyclic TRIM REL switch is pressed, heading hold will be disabled, and bank angles greater than approximately two degrees automatic coordinated turn will be enabled resulting in a rapid deviation from the desired hover heading.

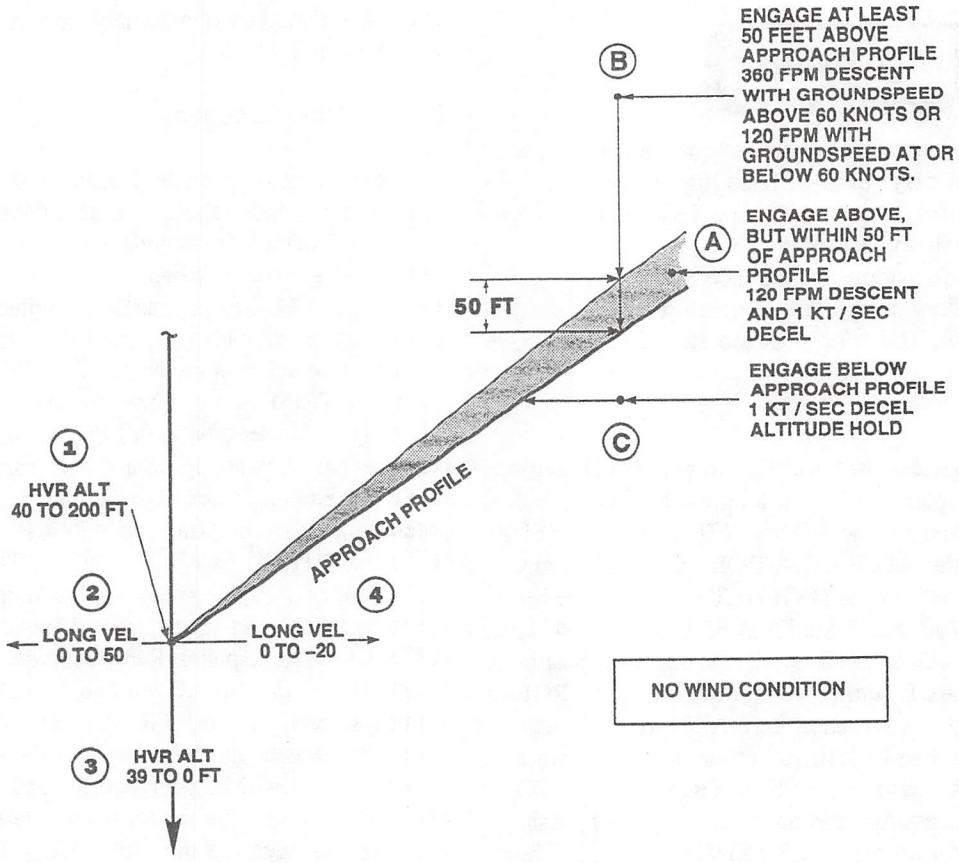

NOTES:

WHEN AIRCRAFT DECELERATES TO 60 KNOTS, ROLL ATTITUDE IS MAINTAINED AND LAT VEL IS ACTIVATED.

1. AIRCRAFT DESCENDS ON APPROACH PROFILE TO HVR ALT SETTING (40–200 FT).
2. AIRCRAFT GROUNDSPEED WILL EQUAL THE LONG VEL SETTING UPON REACHING HVR ALT SETTING BETWEEN 40 AND 200 FEET.
3. AIRCRAFT DESCENDS TO 40 FT ON APPROACH PROFILE, THEN DESCENDS TO HVR ALT SETTING. IF AN ALTITUDE ABOVE 40 FEET IS SELECTED, AIRCRAFT WILL TERMINATE AT THE SET ALTITUDE.
4. AIRCRAFT GROUNDSPEED WILL BE ZERO UPON REACHING HVR ALT SETTING BETWEEN 40 AND 200 FEET, THEN BEGINS REARWARD FLIGHT TO MINUS LONG VEL SETTING.

AK0520
SA

Figure 2-16. Automatic Approach Profile

Table 2-5. Automatic Approach, Hover, and Depart Failure Matrix.

EVENT	RDR ALT FAILURE	DOPPLER FAILURE
During approach	AFCS DEGRADED caution message and CPLR/ALT FAIL ADVISORY light. APPR disengages, BAR ALT engages.	Automatic approach disengages, RDR ALT engages. AFCS DEGRADED caution message and CPLR FAIL ADVISORY light. DOPPLER FAIL advisory message appears on MFDs.
In a Coupled hover or below descent profile (RDR ALT) hold engaged.	Automatic approach disengages, BAR ALT engages. Hover mode stays engaged with BAR ALT, performance degraded.	Automatic approach disengages RDR ALT engages. Hover disengages, RDR ALT engages.
	AFCS DEGRADED caution message and CPLR/ALT FAIL ADVISORY light.	AFCS DEGRADED caution. DOPPLER FAIL advisory message and CPLR FAIL ADVISORY light.
During Departure	Depart disengages, BAR ALT engages.	Aircraft will climb to 500 feet and RDR ALT hold will engage. If airspeed greater than 60 knots, then airspeed will increase to 100 knots. If airspeed is less than 60 knots, then pitch attitude will be maintained.
	AFCS DEGRADED caution message and CPLR/ALT FAIL ADVISORY light.	AFCS DEGRADED caution. DOPPLER FAIL advisory message and CPLR FAIL ADVISORY light.

NOTE: Doppler degradation can be classified as follows:

1. Doppler power or transmitter fail - DOPPLER FAIL advisory message.
2. Doppler memory or receiver fail - DOPPLER MEMORY annunciator or DOPPLER FAIL advisory message.

If a DOPPLER MEMORY annunciator appears during an automatic approach, the approach reverts to an alternate approach. An alternate approach allows the pilot to fly the cyclic portion of the approach while the colloective is commanded as a standard approach.

If a DOPPLER MEMORY annunciator appears while in the hover mode, the hover mode will be disengaged and RDRALT hold will engage. AFCS CONTROL panel FAIL ADVISORY CPLR light will flash and the AFCS DEGRADED caution message will be displayed on the MFDs. If the Doppler becomes operational, the FAIL ADVISORY CPLR light and the AFCS DEGRADED caution message will extinguish but the hover mode does not reengage.

If a DOPPLER MEMORY annunciator appears during an automatic departure, the depart mode will continue depending on airspeed. If airspeed is less than 60 knots, then the cyclic reverts to basic autopilot (pitch attitude hold). If airspeed is greater than 60 knots, then alternate depart is engaged. During an alternate depart, airspeed is increased a 1 knot/per second until 100 knots is captured. In either case, the collective is commanded as a standard departure.

2-112. Automatic Depart.

WARNING

If the AFCS CONTROL panel APPR/HVR lights are not off during a manual go around from an automatic approach or hover, the automatic approach will reengage after the cyclic and collective trim switches are released causing the DAFCS to conduct an approach.

The automatic depart mode provides the capability to perform an automatic departure (Figure 2-17) from a hover mode or from an automatic approach to a cruise airspeed of 100 KIAS and altitude of 500 feet. If the hover mode or the automatic approach feature has already been engaged, or if airspeed is less than 60 knots and autopilot is engaged, the automatic depart mode may be engaged by depressing the DEPART HVR pushbutton on the cyclic grip illuminating the green DPRT light on the AFCS CONTROL panel. Upon engagement, the aircraft accelerates at 2 knots per second and climbs at 480 feet per minute. At 100 KIAS, airspeed hold automatically engages, and at the radar altimeter altitude of 500 feet, radar altitude hold automatically engages. Depressing the DEPART HVR pushbutton a second time will disengage automatic depart mode and engage radar altitude hold. If the second actuation of the depart switch occurred when the aircraft airspeed was greater than 60 knots, the DAFCS will maintain airspeed. If airspeed is less than 60 knots, then pitch attitude will be maintained. Any alternate cruise airspeed between 60 to 100 KIAS or altitude less than 500 feet can be attained by depressing the cyclic TRIM REL or collective TRIM REL switch at the desired airspeed and altitude, respectively. If the airspeed is less than 60 knots when the cyclic TRIM REL is depressed and released, the pitch attitude will be maintained. If either trim release button is depressed and released, the hold mode (airspeed or altitude) associated with that control axis is engaged, and the aircraft continues to follow the depart profile for the other axis until the final cruise condition for that axis is met. During the departure when airspeed is above 60 KIAS, roll attitude is maintained and below 60 KIAS the DAFCS commands roll to eliminate lateral drift. Upon reaching 85 knots airspeed, the present airspeed acceleration begins decreasing to reach zero acceleration at 100 KIAS. Upon reaching 450 feet (radar altitude), the vertical velocity begins decreasing to reach zero velocity at 500 feet.

2-113. Crew Hover.

The crew hover feature provides the hoist operator with the capability to position the aircraft during rescue hoist operations. The hoist operator controls the aircraft from the hover grip (Figure 4-25). The crew hover controller has a control authority of ±5 knots lateral and longitudinal about the reference values selected on the AFCS CONTROL panel LONG VEL and LAT VEL control knobs plus the speeds beeped from the cyclic trim beep switch. The crew hover feature is activated from the AFCS CONTROL panel by depressing the CREW HVR pushbutton and can only be activated if the hover mode is already engaged.

2-114. Stabilator System.

WARNING

Reengagement of the automatic mode after a shutdown results in the automatic mode operating for one second. If a hardover signal to one actuator was the cause of the initial shutdown and reengagement is attempted, that actuator will again cause the stabilator to move before another disengagement is commanded. In this case subsequent reengagement shall not be attempted since it may result in additional stabilator movement.

a. The helicopter has a variable angle of incidence stabilator to enhance handling qualities. The stabilator can be folded when the helicopter is being transported. The automatic mode of operation positions the stabilator to a suitable angle of attack for the existing flight conditions. After the pilot engages the automatic mode, no further pilot action is required for stabilator operation. Two stabilator amplifiers receive airspeed, collective stick position, pitch rate, and lateral acceleration information to program the stabilator through the dual electric actuators. The stabilator is programmed to:

(1) Align stabilator and main rotor downwash in low speed flight to minimize nose-up attitude resulting from downwash.

(2) Decrease angle of incidence with increased airspeed to improve static stability.

(3) Provide collective coupling to minimize pitch attitude excursions due to collective inputs from

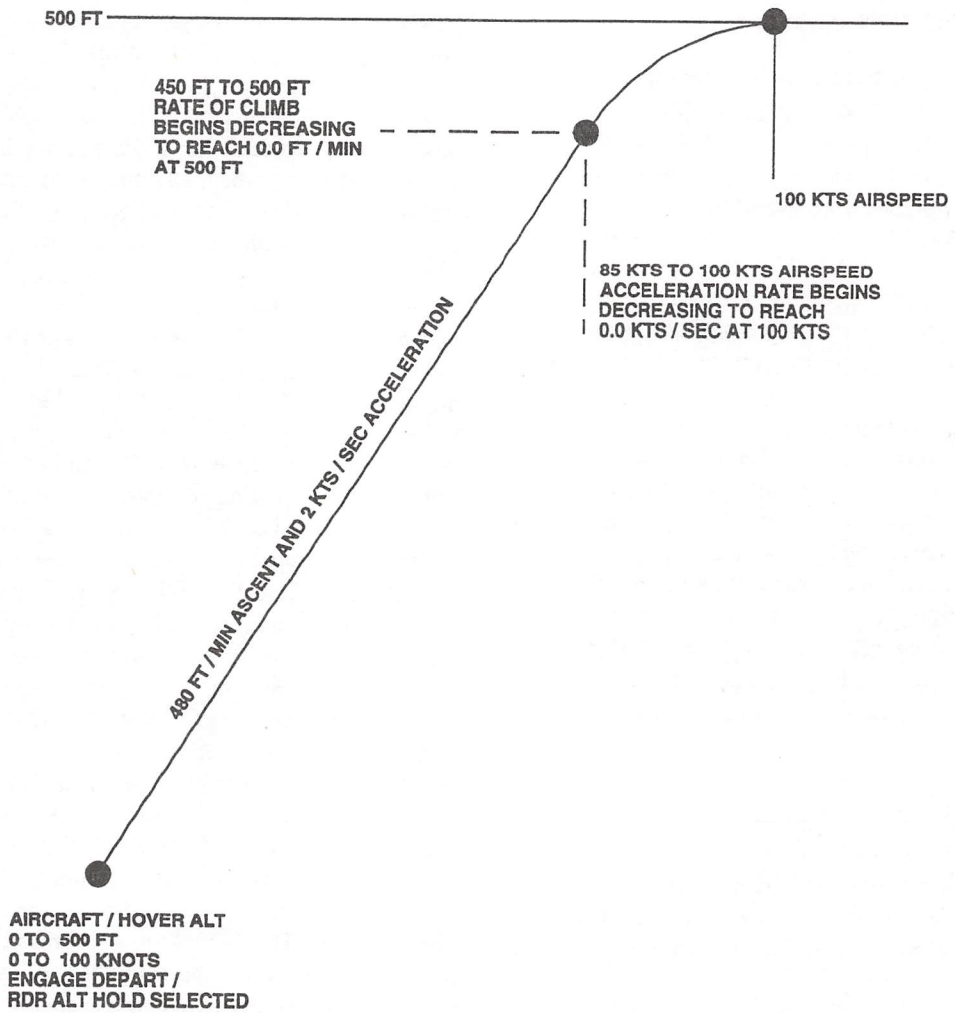

NOTES:

1. WHEN AIRCRAFT IS BELOW 60 KNOTS GROUNDSPEED, LAT VEL SETTINGS IS ACTIVE.
2. WHEN AIRCRAFT IS AT OR ABOVE 60 KNOTS, ROLL ATTITUDE IS ACTIVE.
3. IF CYCLIC TRIM RELEASE SWITCH IS PRESSED WITH GROUNDSPEED BELOW 60 KNOTS, PITCH ATTITUDE IS MAINTAINED.
4. IF CYCLIC TRIM RELEASE SWITCH IS PRESSED WITH GROUNDSPEED AT OR ABOVE 60 KNOTS, AIRSPEED HOLD IS ENGAGED.
5. IF COLLECTIVE TRIM RELEASE SWITCH IS PRESSED WITH GROUNDSPEED AT OR ABOVE 60 KNOTS, ALTITUDE HOLD IS ENGAGED.
6. 450 FEET AND 85 KNOTS MAY NOT OCCUR AT THE SAME TIME.

AK0521
SA

Figure 2-17. Automatic Departure Profile

the pilot. Collective position sensors detect pilot collective displacement which results in a change in stabilator angle to counteract the pitch changes. The coupling of stabilator position to collective displacement is automatically phased in beginning at 30 KIAS.

(4) Provide pitch rate feedback to improve dynamic stability. The rate of pitch attitude change of the helicopter is sensed by a pitch rate gyro associated with each of the two stabilator amplifiers and used to position the stabilator to help dampen pitch excursions during gusty wind conditions. A sudden pitch up due to gusts would cause the stabilator to be programmed trailing edge down a small amount to induce a nose-down pitch to dampen the initial reaction.

(5) Provide sideslip to pitch coupling to reduce susceptibility to gusts. When the helicopter is out of trim in a slip or skid, pitch excursions are also induced as a result of the canted tail rotor. Lateral accelerometers sense this out of trim condition and signal the stabilator amplifiers to compensate for the side slip change (called sideslip to pitch coupling). Nose left (right slip) results in the trailing edge programming down. Nose right produces the opposite stabilator reaction.

b. The above features are provided via inputs to dual electric actuators which position the stabilator. Failure of one actuator will restrict total movement of the stabilator to about 35° if failure occurs full DN, or about 30° if failure occurs full up. The stabilator electrical jack screw actuators receive power from the dc essential bus and No.1 dc primary bus through circuit breakers marked NO.1 STAB PWR and NO.2 STAB PWR, respectively. Since the dc essential bus is powered by the battery, it is possible to manually slew one of the two actuators using battery power only. If the stabilator is slewed UP using battery power, it must be manually slewed back down using battery power to get a normal engagement of the automatic mode. Otherwise, when only one actuator is slewed, it causes a very large mismatch between the two actuator positions. This is detected by the fault monitor and shuts down the automatic mode upon attempted engagement. Automatic control function amplifiers and sensors including airspeed sensors, pitch rate gyros, collective position sensor, and lateral accelerometer receive power from the ac essential bus. AC power for the No.1 and No.2 stabilator amplifiers is provided by the No.1 ac essential bus and No.2 ac primary bus, respectively. The ac circuit breakers are identified as STAB CONT. The circuit breakers are located on the upper console and copilot's circuit breakers panels.

2-115. Stabilator Control Panel.

The stabilator control panel (Figure 2-15), on the lower console, provides electrical control of the stabilator system. The panel contains a MAN SLEW switch, a TEST button, and AUTO CONTROL PUSH TO RESET switch with a push-to-reset feature. The automatic mode will allow the stabilator to be automatically operated from about 42° trailing edge down to 12° trailing edge up. Stabilator position depends upon whether ETS is installed or removed. Manual operation is also restricted to these limits. If a malfunction occurs in the automatic mode, the system will switch to manual, ON will go off in the AUTO CONTROL PUSH TO RESET window, and the STABILATOR FAIL caution message and MASTER CAUTION PRESS TO RESET lights will go on, a beeping tone and voice warning message "stabilator" will be heard in the pilot's and copilot's headphones. It may be possible to regain the auto mode by pressing the AUTO CONTROL PUSH TO RESET switch. If the automatic mode is regained, ON will appear in the AUTO CONTROL PUSH TO RESET switch window and the caution message will go off and the voice warning message "stabilator" will remain on until acknowledged. The stabilator automatic mode is held in the energized state within the stabilator control amplifier. On certain occasions during interruption of dc power, such as switching of generators, it is possible to have conditions where the stabilator automatic mode may shut down. In this case the STABILATOR control panel AUTO CONTROL PUSH TO RESET switch may be pressed to reengage the auto mode. If the automatic mode is not regained, the MASTER CAUTION PRESS TO RESET must be reset, which turns off the beeping tone, and the stabilator controlled throughout its range with the MAN SLEW switch. When initial power is applied to the stabilator system, it will be in the automatic mode. The TEST switch is used to check the auto mode fault detector feature and is inoperative above 60 KIAS. When pressed, control of the stabilator should go to the manual mode. The following controls and indicators are located on the STABILATOR control panel:

CONTROL	FUNCTION
MAN SLEW	
UP	Moves the trailing edge of the stabilator up.
DOWN	Moves the trailing edge of the stabilator down.

CONTROL	FUNCTION
Midposition	Enable automatic mode to be active.
TEST button	A momentary pushbutton to drive the stabilator actuators out of track with one another. Stabilator AUTO CONTROL PUSH TO RESET light goes off, MASTER CAUTION PRESS TO RESET lights illuminates, and STABILATOR FAIL caution message comes on and stabilator VWS message heard.
AUTO CONTROL PUSH TO RESET	Places the stabilator in the automatic mode (ON light illuminated).

2-116. Stabilator Position Indicator.

NOTE

The stabilator bias must be changed to reflect ETS removed or ETS installed. If the indicator reflects between the values of the opposite configuration, then the bias was not changed. STAB POS indicator should be between 34° and 42° DN with ETS removed, and between 32° and 40° DN with ETS installed.

A STAB POS indicator (Figure 2-8) is on the instrument panel. It gives the pilot and copilot a remote indication of stabilator position. In auto control mode during airspeed acceleration, the stabilator indicator should begin moving at 30 KIAS, and should be passing through 25° at 60 KIAS. During airspeed deceleration, the stabilator will start moving DN at 80 KIAS, and should be full down at less than 30 KIAS, and should make automatic adjustment throughout the flight. The indicator range is marked from 45° DN to 10° up. The stabilator position indicator system is powered by the No.2 26V ac essential bus through a circuit breaker marked STAB IND on the copilot circuit breaker panel.

2-117. Cyclic-Mounted Stabilator Slew Up Switch.

Installed on each cyclic stick below the grip (Figure 2-13) is a pull-type stabilator manual slew up switch. The switch provides the pilot and copilot with rapid accessibility to stabilator slew up. The cyclic slew switch is wired in parallel with the stabilator panel MAN SLEW-UP switch position. When the switch is actuated, the system will revert to manual mode and the stabilator trailing edge will begin to move up and continue until the up limit stop is reached or the switch is released.

Section VI HYDRAULIC AND PNEUMATIC SYSTEM

2-118. Hydraulic System.

The three hydraulic systems are designed to provide full flight control pressure. The components of the hydraulic systems are three hydraulic pump modules, two transfer modules, a utility module, rescue hoist priority valve, three dual primary servos, one dual tail rotor servo, four pilot-assist servos, an APU accumulator, an APU handpump, rescue hoist, rotor brake, and a servicing handpump. There are three hydraulic pressure supply systems: No.1, No.2, and backup. All are completely independent, and each is fully capable of providing essential flight control pressure for maximum system redundancy. Complete redundancy is accomplished by the backup pump providing hydraulic power to both No.1 and/or No.2 hydraulic systems if one or both pumps fail. If No.1 and No.2 hydraulic systems lose pressure, there will be a slight restriction in the maximum rate of flight control movement due to the backup hydraulic pump supplying both stages with hydraulic power. When the SERVO switch (Figure 2-14) on the collective stick grip is moved to 1ST OFF or 2ND OFF position, that stage of the primary servos is turned off. When one stage is turned off, a malfunction in the operating stage will cause the other stage (which was turned off) to automatically turn back on in case the backup system does not take over the function of the failed stage. A hydraulic handpump is provided to manually recharge the APU start system, if required.

NOTE

The following listed caution messages may momentarily flicker when the applicable listed switch is activated; this is considered normal.

SUBSYSTEM	CAUTION MESSAGE
SAS 1 or SAS 2 switch ON	PRI SERVO 2 PRESS LO #2 HYD PUMP FAIL BOOST SERVO OFF
SAS/BOOST switch ON	PRI SERVO 2 PRESS LO #2 HYD PUMP FAIL SAS FAIL
TAIL SERVO switch BACKUP	PRI SERVO 1 PRESS LO #1 HYD PUMP FAIL
HYD LEAK TEST switch NORM after RESET	PRI SERVO 1 and 2 PRESS LO #1 and #2 HYD PUMP FAIL

2-119. Hydraulic Pump Modules.

The hydraulic pump modules are combination hydraulic pumps and reservoirs. The No.1, No.2, and backup pump modules are identical and interchangeable. The No.1 pump module is mounted on and driven by the left accessory module of the main transmission. The No.2 pump module is mounted on and driven by the right accessory transmission module. The backup pump module is mounted on and driven by an ac electric motor. The reservoir part of each pump module has a level indicator window marked EMPTY, REFILL, and FULL. A pressure relief and bleed valve protects the pump from high pressure in the return system. The pump has two filters: a pressure filter and a return filter. A red indicator button on each filter will pop out when pressure goes up 70 ±10 psi above normal. The pressure filter has no bypass. The return filter has a bypass valve that opens when return pressure reaches 100 ±10 psi. Each pump has three check valves: one at the external ground coupling, one at the pressure side, and one at the return side. A fluid quantity switch, mounted on top of each pump module, senses fluid loss for that system. When the piston in the pump module moves down to the REFILL mark, the piston closes the switch, turning on a caution message marked HYDR RSVR #1 LO, HYDR RSVR #2 LO, or BKUP RSVR LO. A depressurization valve in the backup pump module allows the motor to get up to rated speed before a load is applied. When the backup pump motor is turned on, the depressurization valve in the backup pump module strokes the output pressure of the pump to 700 psi. A half-second after starting the pump motor, with a main generator operating, or 4 seconds when operating from the APU generator or external power source, the valve closes allowing the pump to develop 3000 psi output pressure. Each hydraulic pump has two temperature sensitive labels mounted on the side. When a temperature level is reached a circle turns black. There are two types of labels used on the pumps. When a maximum temperature level is exceeded, an entry shall be made on DA Form 2408-13-1. The aircraft should not be flown until appropriate maintenance action has been taken.

2-120. No.1 Hydraulic System.

The No.1 hydraulic system operates with the rotor turning, and supplies the first stage of all primary servos and first stage tail rotor servo. The system components are an integrated pump module, a transfer module, first stage primary servos, and first stage tail rotor servo. The primary servos are controlled by the SERVO switch (Figure 2-14). The switch can turn off either first or second stage of the primary servos but not both at the same time. First stage tail

rotor servo can be manually turned off by a two-position switch marked TAIL SERVO, on the MISC SW panel (Figure 2-7 and 2-22). If the fluid quantity of the number one pump reservoir becomes low, a microswitch will complete an electrical circuit to close the first stage tail rotor servo valve. If fluid continues to be lost and the #1 HYD PUMP FAIL caution message goes on, the first stage tail rotor shutoff valve will open, allowing backup pressure to supply first stage tail rotor. The logic modules automatically control the hydraulic system. The tail rotor servo is a two-stage servo; however, unlike the primary servos, only one stage is pressurized at a time.

2-121. No.2 Hydraulic System.

The No.2 hydraulic system operates with the rotor turning, and supplies the second stage primary servos and the pilot-assist servos. System components are the integrated pump module, transfer module, second stage primary servos, and pilot-assist modules. Second stage primary servos can be manually turned off by the SERVO switch. The pilot-assist servos cannot be turned off collectively; but SAS, TRIM, and BOOST servos can be manually turned off by switches on the AFCS CONTROL panel. If fluid quantity of the No.2 pump reservoir becomes low, the pilot-assist servo becomes inoperative. If fluid continues to be lost, the #2 HYD PUMP FAIL caution message will go on.

2-122. Backup Hydraulic System.

CAUTION

Whenever the No.1 ac generator is inoperative (failed, or not on line) and the BACKUP HYD CONTR circuit breaker is out for any reason, ac electrical power must be shut off before resetting BACKUP HYD CONTR circuit breaker. Otherwise, it is possible to damage the current limiters.

Starting the backup hydraulic pump, particularly with external power or APU power, may cause AFCS computer and/or stabilator system shutdowns. If this malfunction occurs, AFCS computer operation can be restored by pressing the AFCS CONTROL panel CMPTR PWR/RESET switch. Stabilator system operation can be restored by pressing the STABILATOR control panel AUTO CONTROL PUSH TO RESET switch.

The backup hydraulic pump system supplies emergency pressure to the No.1 and/or No.2 hydraulic systems whenever a pressure loss occurs. It also supplies pressure to the second stage of the tail rotor servo in case of a loss of pressure in the first stage of the tail rotor servo. This system supplies hydraulic pressure to all flight control components during ground checkout. The backup system also provides hydraulic pressure for automatic recharging of the APU start system accumulator and rescue hoist operation. The backup hydraulic system pump module is driven by an electric motor which can be powered by any adequate three-phase ac power source. An internal depressurizing valve in the backup pump module reduces the output pressure of the pump upon startup of the electric motor. This valve unloads the electric motor by reducing torque requirement at low rpm. After about 0.5 second when main generator is operating, or 4 seconds when operating from APU generator or external power, the valve is closed and 3000 psi pressure is supplied to the hydraulic system. This sequence reduces the current demand during backup system startup. Pressure sensing switches in the No.1 and No.2 transfer modules constantly monitor the pressure output of the No.1 and No.2 pumps. Loss of pressure initiates the backup operation. The system then provides emergency pressure to maintain full flight control capability. A WOW switch on the right main landing gear provides automatic operation of the backup pump when the helicopter is in the air, regardless of BACKUP HYD PUMP switch position, and disables the backup pump thermal switch. A pressure sensing switch at the tail rotor monitors supply pressure to the first stage tail rotor servo. The backup pump can supply pressure to the first stage tail rotor servo if the No.1 pump loses pressure. This gives the pilot a backup tail rotor servo even with the loss of the primary hydraulic supply. If a leak in a primary servo system depletes the backup system fluid, the backup reservoir level sensing switch will turn on the BKUP RSVR LO caution message, and the pilot must manually turn off the leaking primary system.

2-123. Hydraulic Leak Detection/Isolation System.

The leak detection/isolation (LDI) system protects the flight control hydraulic system by preventing loss of hydraulic fluid. The LDI system uses pressure switches and fluid level sensors for monitoring pump hydraulic fluid level, and pump pressure for primary and tail rotor servos, and pilot-assist servos. When a pump module reservoir fluid level switch detects a fluid loss, the logic module operates the required shutoff valve(s) to isolate the leak and turns on the backup pump. In the cockpit the reservoir low caution message for that system appears on the MFDs. Backup pump and shutoff valve(s) operation is automatic through the logic module. If the leak continues, the SERVO switch must be moved to the appropriate off position. By placing

the HYD LEAK TEST switch to TEST, all leak detection/ isolation system components are checked electrically. After a leak test has been made, the HYD LEAK TEST switch must be moved to RESET momentarily, to turn off caution and advisory messages that were on during the test. The BKUP HYD PUMP ON advisory message will remain on for about 90 seconds. Refer to Chapter 8 Section II for test procedure. Except for the HYD LEAK TEST switch, the hydraulic leak system consists of components of first stage, second stage, and backup hydraulic systems. There is no leak detection isolation logic for backup pump operations. The WOW switch prevents hydraulic leak tests from being made in flight. Power to the hydraulic leak test system is provided by the No.2 dc primary bus and dc essential bus through circuit breakers marked No.2 SERVO CONTR and BACKUP HYD CONTR, on the pilot circuit breaker panel and upper console, respectively.

2-124. Transfer Modules.

The No.1 and No.2 transfer modules connect hydraulic pressure from the pump modules to the flight control servos. Each module is an integrated assembly of shutoff valves, pressure switches, check valves, and restrictor. The modules are interchangeable.

2-125. No.1 Transfer Module.

This module has a transfer valve, a pressure switch, a first stage primary shutoff valve, a first stage tail rotor shutoff valve, a restrictor, and check valves. The transfer valve is spring-loaded to the open or normal position. If first stage hydraulic pressure is lost, the valve automatically transfers backup pump pressure to the first stage system. The first stage primary shutoff valve lets the pilot or copilot shut off first stage pressure to the primary servos and an electrical interlock circuit which senses pressure from both system prevents both stages from being shut off at the same time. The pressure switch lights the #1 HYD PUMP FAIL message on the MFDs when pressure drops to 2000 ±50 psi, and sends a signal to a logic module that pressure is lost in the first stage hydraulic system. The restrictor allows fluid to circulate for cooling under no-flow conditions. If a fluid leak develops past the transfer module, the check valves prevent fluid loss on the return side of the transfer module.

2-126. No.2 Transfer Module.

The No.2 transfer module is like the No.1 module except that it supplies second stage pressure. The pilot assist shutoff valve turns off pressure to the pilot assist module. The second stage primary servo shutoff valve turns off pressure to the second stage of the primary servos. The pressure switch turns on the #2 HYD PUMP FAIL caution message on the MFD when second stage system pressure is below 2000 ±50 psi, and sends a signal to a logic module that pressure is lost in the second stage system.

2-127. Utility Module.

The utility module connects hydraulic pressure from the backup pump to the No.1 and No.2 transfer modules, the second stage of the tail rotor servo, the APU accumulator, and rescue hoist. A pressure switch on the module senses the backup pump operating and turns on the BKUP HYD PUMP ON advisory message on the MFDs. If the flow rate through the module to the APU accumulator goes over 1.5 gpm, a velocity fuse shuts off flow.

2-128. Logic Modules.

Two logic modules are used to control the operation of the hydraulic systems. The logic modules continually monitor the operation of the hydraulic systems by inputs received from pressure switches, fluid level switches on the pump modules, and inputs received from control switches in the hydraulic system. The outputs of the logic modules will either turn on caution/advisory messages on the MFDs notifying the pilot of a failure, and/or turn off one or more valves due to a system malfunction. All switching functions of the hydraulic logic modules are automatic, except as shown by a asterisk which indicates crewmember action (Figure 2-18).

2-129. Reservoir Fill System.

A handpump and manual selector valve are on the right side upper deck of the helicopter for system servicing. Refer to Figure 2-34 for servicing. The three hydraulic system reservoir levels can be seen from the fill pump location. The handpump reservoir contains a sight gage above the handpump crank. In addition to servicing the three hydraulic system reservoirs, the handpump reservoir serves as the rotor brake system reservoir. A 1-quart level mark indicates a requirement for refill. Refer to Section XV this chapter for servicing.

2-130. Rescue Hoist Priority Valve.

The pressure line between the utility module and rescue hoist contains a priority valve that isolates the rescue hoist in case of a reduction in hydraulic power supply. The priority valve open when hydraulic pressure is 2200 psi ±50, and closes when hydraulic pressure drops below 2050 psi. This prevents starvation of essential flight control systems if the backup system is needed while operating the rescue hoist.

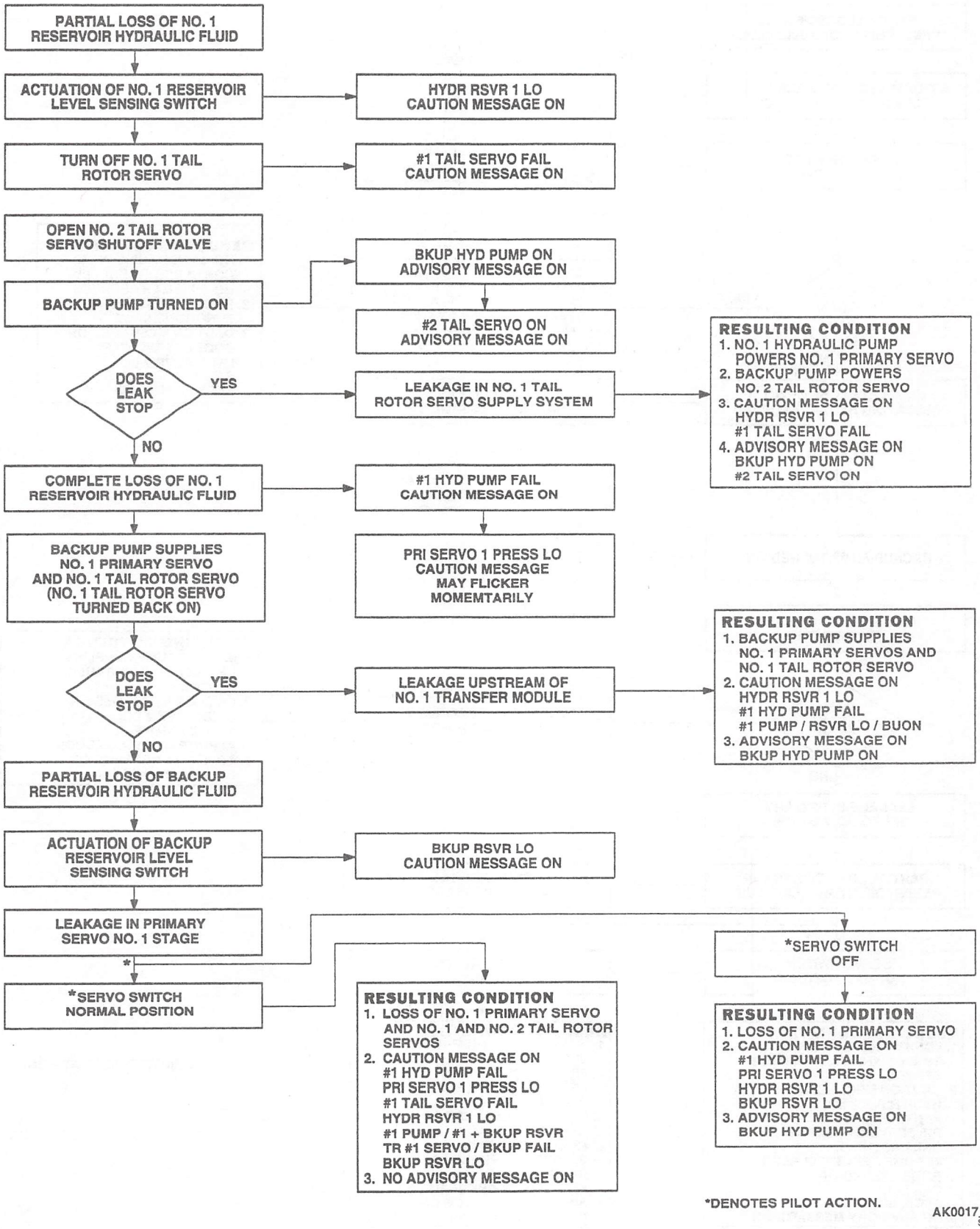

Figure 2-18. Hydraulic Logic Module Operation Principle (Sheet 1 of 2)

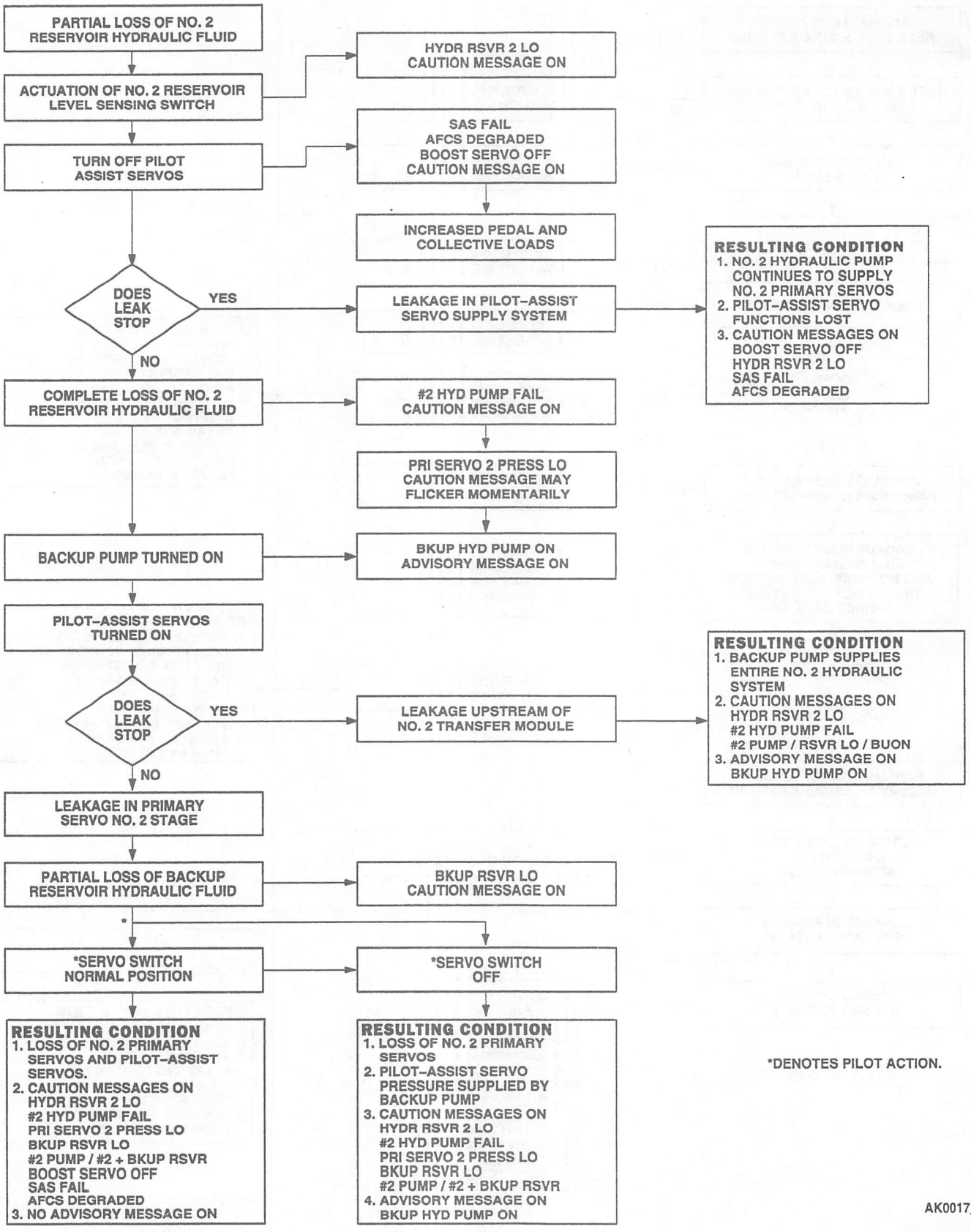

Figure 2-18. Hydraulic Logic Module Operation Principle (Sheet 2 of 2)

2-131. Pneumatic Subsystem.

A pneumatic subsystem operating from bleed-air furnished by the main engines, the APU, or an external pneumatic power source, is used to drive the main engine starter, and heating system operation. Bleed-air from the main engines is used for engine inlet anti-icing subsystem operation. The heating subsystem uses bleed-air supplied by the main engines during flight, and on the ground by the main engines, APU, or external source. The subsystem contains check valves at each bleed-air source, and a shutoff valve at each main engine.

Section VII POWERTRAIN SYSTEM

2-132. Powertrain.

The powertrain consists of inputs from two engines, a main transmission, intermediate gear box, tail gear box and connecting drive shafting. Power from the engines is transmitted to the main transmission module through input modules. The main transmission is mounted on top of the cabin between the two engines (Figure 2-1). It mounts and powers the main rotor head, changes the angle of drive from the engines, reduces rpm from the engines, powers the tail rotor drive shaft and drives the accessory modules. The main transmission consists of five modules: two input modules, main module, and two accessory modules.

2-133. Input Module.

The input modules are mounted on the left and right front of the main module and support the front of the engines. They contain an input bevel pinion and gear, and a free wheel unit. The free wheel unit allows engine disengagement during autorotation, or in case of a nonoperating engine, the accessory module will continue to be driven by the main rotor. The input module provides the first gear reduction between engine and main module.

2-134. Accessory Module.

One accessory module is mounted on the forward section of each input module. Each accessory module provides mounting and drive for an electrical generator and a hydraulic pump package. A rotor speed sensor is mounted on the right accessory module and provides signals for the RTUs that is converted to a digital readout and vertical display on the MFDs engine instrument display. An additional rotor speed sensor is mounted on the left accessory module which provides input signals to the DEC for improved transient droop response.

2-135. Main Module.

The main module contains the necessary gearing to drive the main rotor and tail rotor systems. It provides a reduction in speed from the input module to the main rotor shaft and the tail drive shaft.

2-136. Main Transmission Lubrication System.

The transmission incorporates an integral wet sump lubrication system that provides cooled, filtered oil to all bearing and gears. In addition, the ac generators on the accessory modules receive oil for cooling. Oil under pressure is supplied through internally cored oil lines, except for the pressure and return lines of the oil cooler. Refer to servicing diagram for oil specification and servicing (Table 2-8). The lubrication system includes two lubrication pumps that are combination pressure and scavenge types operating in parallel. The main transmission may run at cruise flight for 30 minutes with loss of all oil. Main transmission oil pressure may fluctuate when the helicopter is known to be in a nose-up attitude (i.e., slope landings or hover with an extreme aft CG). Momentary fluctuations in oil pressure may occur during transient maneuvers or steady nose-up hover. Even small pitch attitude change during hover above 6° will cause pressure fluctuations. Momentary fluctuations causing transmission pressure to drop into the yellow range from 20 to 30 psi are acceptable during the above flight conditions. Refer to Chapter 5 for system operating conditions and limitations. Pressure and regulating and bypass valves protect the lubrication system by returning excess high pressure oil back to the inlet side of the pump. A two-stage oil filter and various strainers in the sump prevent contamination. The oil filter has a visual impending bypass indicator (red button) that protrudes when the first stage filter becomes contaminated. When the button pops the filter element must be replaced to reset. A thermal lockout prevents button popping when oil is cold and thick. The oil cooler uses a blower driven by the tail rotor drive shaft to cool oil before it enters the various modules. The oil cooler has a thermostatic bypass valve that directs oil flow around the cooler when the oil temperature is below 71 ±1°C. Other warning and monitoring sensors for the main transmission are the MN XMSN OIL HOT, MN XMSN PRESS HI, MN XMSN PRESS LO, AND MAIN XMSN CHIP caution messages. Sensors will display a message on the MFDs when transmission oil temperature and/or pressure values are outside of their limits or a metal particle has be detected in the oil supply. An oil pressure sensor causes the MN XMSN PRESS LO caution message to go on when the pressure drops to 14 ±2 psi. The transmission oil temperature warning system is triggered by an oil temperature sensor at the oil cooler input to the main module, near the tail takeoff drive shaft flange. A caution message, MN XMSN OIL HOT goes on when transmission oil temperature reaches 140°C. Temperature for the gage is sensed between the sump and the pump. Pressure readings are taken at the main module manifold. Electrical power for the warning systems, except chip detection, is from the No.2 dc primary bus, through the MAIN XMSN circuit breaker on the pilot's circuit breaker panel.

2-137. Transmission Oil Temperature Display.

The transmission oil temperature is displayed on the power train display page on the MFDs (Figure 5-3). Refer to Chapter 5 for limitations. Power to the temperature sensors and MN XMSN OIL HOT caution message is provided by the No.1 and No.2 ac primary buses through the No.1 RTU and No.2 RTU circuit breakers and the No.2 dc primary bus through a circuit breaker marked MAIN XMSN on the copilot and pilot's circuit breaker panels.

2-138. Transmission Oil Pressure Display.

The transmission oil pressure is displayed on the power train display page on the MFDs (Figure 5-3). Refer to Chapter 5 for limitations. Power to the pressure sensors and MN XMSN PRESS LO caution message is provided by the No.1 and No.2 ac primary buses through the No.1 and No.2 RTU circuit breakers and the No.2 dc primary bus through a circuit breaker marked MAIN XMSN on the copilot and pilot's circuit breaker panels.

2-139. Chip Detector/Fuzz Burn-Off System.

The main transmission chip detector is connected to a 30-second time delay relay which will energize when a chip has been present for approximately 30 seconds. The 30-second time delay relay ensures that a caution message is not displayed for transient conditions or due to normal wear particles that could wash away or burn off. All other chip detectors will activate its respective caution message immediately. The fuzz burn-off feature will be deactivated when the oil temperature at the affected gear box causes the MN XMSN OIL HOT message to go on. However, magnetic detection will remain to turn on the MAIN XMSN CHIP caution message. The power train display page (Figure 5-3) along with any MFD display will identify the respective area in which a chip particle is detected. If a chip particle is washed away or burns off, the WCA page and caution message area on the MFDs will continue to display the caution for 15 seconds; however, the chip indication on the power train page will extinguish immediately.

2-140. Transmission Chip Detector System.

The transmission chip detector system consists of fuzz suppression chip detectors on the left and right input, left and right accessory modules, and the main gear box module. Five chip detectors provide warning of chips in any of five areas of the main transmission system. A chip caution message (MAIN XMSN CHIP, LH AGB CHIP, RH AGB CHIP, #1 INPUT CHIP, or #2 INPUT CHIP) will appear on the MFDs when the respective module chip detector is activated by metal particles. Refer to Chapter 3 for access to the chip detectors display page. Detectors in each module are wired in parallel to constantly monitor for metal contamination. Each chip detector incorporates a self-sealing provision so that it can be removed for visual inspection without loss of oil. A fuzz burn-off feature eliminates false warning due to fuzz and small particles. When a chip is detected and will not burn off, the metal particle triggers the detection system and a chip caution message will go on. The magnetic plugs of the chip detector system will attract ferrous metal chips at any of the detector locations. A chip caution message will be displayed on the MFDs whenever a particle is detected. If a chip message is acknowledged during flight, the pilot or maintenance person must check the MFD caution summary or MFD power train page (Figure 3-18 or 5-3) before removing power, to determine the location of the chip. The chip detector for the main module sump rests in the lowest point of the oil system. The transmission chip detector system is powered through the RTUs.

2-141. Tail Drive System.

Six sections of drive shaft connect the main module to the tail rotor gear box. The shafts drive the oil cooler blower and transmit torque to the tail rotor. Each shaft is dynamically balanced tubular aluminum. Multiple disc (flexible) couplings between sections provide misalignment capability for in-flight deflections. The shafts are ballistically tolerant if hit by a projectile and are suspended at four points along the tail cone in viscous-damped bearings mounted to fuselage support brackets.

2-142. Intermediate Gear Box.

Mounted at the base of the pylon is the oil-lubricated intermediate gear box (Figure 2-34). It transmits torque and reduces shaft speed from the main gear box to the tail gear box. The intermediate gear box may run at cruise flight for 30 minutes, with loss of all oil. An internal metal fuzz suppression chip/temperature sensor detects metal particles and gear box overtemperature conditions that activates the INTMD XMSN CHIP/TEMP caution message on the MFDs.

2-143. Tail Gear Box.

The oil-lubricated tail gear box (Figure 2-34) at the top of the tail pylon transmits torque to the tail rotor head. The gear box mounts the tail rotor, changes angle of drive and provides a gear reduction. It also enables pitch changes of the tail rotor blades through the flight control system. The gear box housing is magnesium. The tail gear box may run at cruise flight for 30 minutes with loss of all oil. An internal fuzz suppression metal chip/temperature sensor detects

metal particles and gear box overtemperature conditions that activates the TAIL XMSN CHIP/TEMP caution message on the MFDs.

2-144. Intermediate and Tail Gear Box Chip/ Temperature Systems.

The intermediate and tail gear boxes contain identical chip/temperature sensors that indicate in the cockpit when the gear box temperature is too high, or a chip is present. The chip detectors incorporate a fuzz burn-off feature which eliminates false warning due to fuzz and small particles. When a chip is detected and will not burn off, a chip caution message on the MFDs will illuminate. The oil temperature sensor is a bimetal strip that reacts to temperatures. When the oil temperature reaches 140°C, a switch will close and cause a TAIL XMSN CHIP/TEMP or INTMD XMSN CHIP/TEMP caution message on appear on the MFDs. Power to the intermediate and tail gear box chip/ temperature system is provided by the RTUs.

Section VIII MAIN AND TAIL ROTOR GROUPS

2-145. Rotor System.

The aircraft is configured with a single four-blade main rotor and a 20° canted, four-blade tractor tail rotor. The fully articulated main rotor head incorporates elastomeric bearings. The tail rotor is a hingeless crossbeam rotor of composite construction.

2-146. Main Rotor System.

The main rotor system consists of four subsystem: main rotor blades, hub, flight controls and the bifilar vibration absorber. Four titanium-spar main rotor blades attach to spindles which are retained by elastomeric bearings which permit the blades to flap, lead, and lag. Lag motion is controlled by hydraulic dampers and blade pitch is controlled through adjustable control rods which are moved by the swash plate. Lead stops are installed to cushion the main rotor blades when the rotor brake is applied with rotors turning. When the rotor is not turning, the blades and spindles rest on hub mounted droop stops. Upper restraints called anti-flapping stops retain flapping motion caused by the wind. Both stops engage as the rotor slows down during engine shutdown. Blade retaining pins can be pulled from the blade spindle joint and the blades folded along the rear of the fuselage. The bifilar vibration absorber reduces rotor vibration at the rotor. The absorber is mounted on top of the hub and consists of a four arm plate with attached weights. Main rotor dampers are installed between each of the main rotor spindles modules and the hub to restrain hunting (lead and lag motions) of the main rotor blades during rotation and to absorb rotor head starting loads. Each damper is supplied with pressurized hydraulic fluid from a reservoir mounted on the side of each damper. The reservoir has an indicator that monitors the reserve fluid. When the damper is fully serviced, the indicator will show full gold.

2-147. Main Rotor Blades.

Four main rotor blades use a titanium spar for their main structural member. The structure aft of the spar consist of fiberglass skin, Nomex honeycomb filler and a graphite/ fiberglass trailing edge. The leading edge of each blade has a titanium abrasion strip, the outboard portion of which is protected by a replaceable nickel strip. Electro-thermal blankets are bonded into the blades leading edge for deicing. A blade inspection method (BIM®) indicator (Figure 2-19), is installed on each blade at the root end trailing edge to visually indicate when blade spar structural integrity may be degraded. If a spar crack occurs, or a seal leaks, nitrogen will escape from the spar. When the pressure drops below minimum, the indicator will show red bands. A manual test lever is installed on each BIM® indicator to provide a maintenance check. The blades are attached to the rotor head by two quick-release expandable pins, that require no tools to either remove or install. To conserve space, all blades can be folded to the rear and downward along the tail cone. When mooring, the blades can be tied down with a fitting on the bottom of each blade.

2-148. Main Rotor Gust Lock.

The gust lock prevents the blades from rotating when the helicopter is parked. The gust lock is designed to withstand torque from one engine only at idle, and thus allow engine maintenance checks independent of drive train rotation. The locking system consists of a locking handle at the rear of the cabin (Figure 2-5), a GUST LOCK ON caution message on sensor switch, and a locking device and teeth on the rotor brake disc of the main transmission. The lock shall only be applied when the rotor system is stationary; it can only be released when both engines are shut down. Power to the gust lock sensor switch is provide by the No.1 dc primary bus through a circuit breaker marked LIGHTS ADVSY on the copilot's circuit breaker panel.

2-149. Rotor Brake System.

The rotor brake system (Figure 2-4 and 2-20) is designed to hold the rotor during engine start and with both engines at IDLE and to provide rotor shutdown. The system consists of a reservoir, master cylinder, gage, relief valve assembly, accumulator, pressure switch, rotor brake caution message detection, brake assembly, and disc. When the rotor brake is applied, the rotor brake interlock in the engine control quadrant prevents the PCLs from being moved out of the idle detent with the rotor brake on. When the rotor brake lever is moved toward the apply position, pressure is built up in the lines and applied to the brake assembly. At the same time, pressure is applied to the rotor brake accumulator and a pressure switch to turn on the ROTOR BRAKE ON advisory message and set the ground idle quadrant lock. Back pressure in the accumulator is held by a spring as long as the rotor brake lever is in the applied position. For limited internal pressure leaks, the accumulator spring pressure will maintain the applied pressure to the brake pucks until the brake is released by returning the rotor brake lever to the off position, venting pressure back to the master cylinder reservoir. The rotor brake should not be applied with engine(s) operating. The brake disc is mounted on the tail drive shaft output of the main gear box. The rotor brake caution message system is powered by the dc essential bus through a circuit breaker marked RTR BRAKE on the upper console circuit breaker panel.

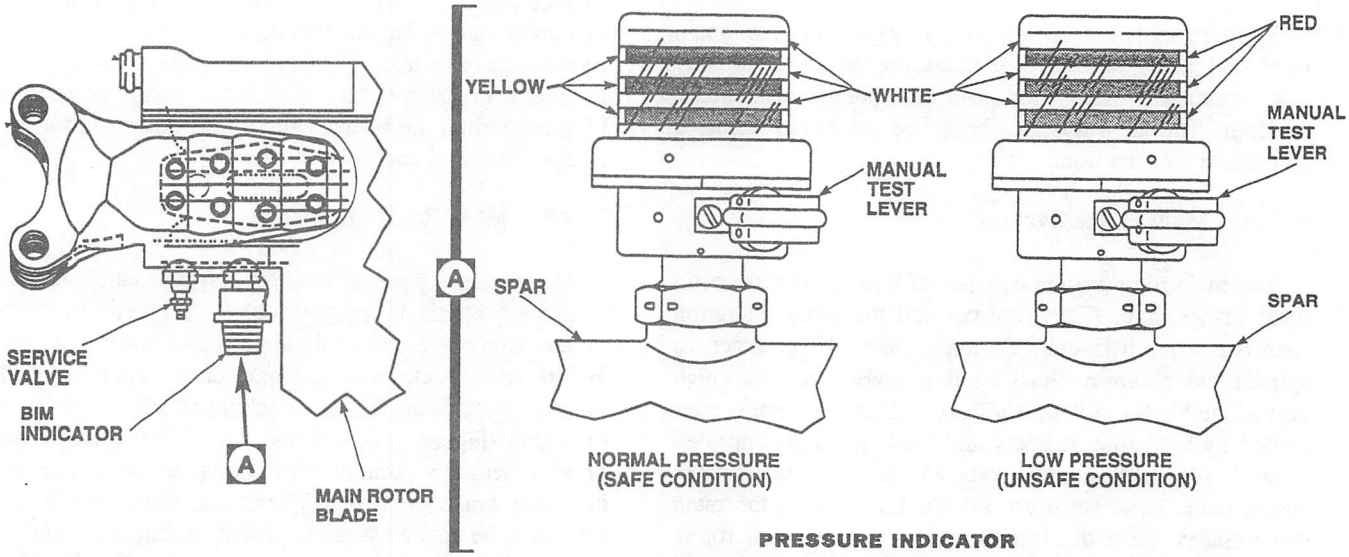

Figure 2-19. Main Rotor Blade and BIM® System

2-150. Rotor Brake Master Cylinder.

The rotor brake master cylinder, on the right side of the overhead console (Figure 2-4 and 2-20) provides pressure to the rotor brake assembly. With the master cylinder in the detent position (rotor brake lever off), the system is vented back to the reservoir. The handpump reservoir serves as the rotor brake reservoir. A T-shape rotor brake lever lockpin is provided to prevent inadvertent release once the brake has been applied. To set the pin, after the rotor brake lever is forward, rotate the pin 90° and push the pin inward until it seats into a hole on the lever arm. To release the pin, pull and rotate 90°. The lever arm is then free to release the pressure on the system.

2-151. Tail Rotor System.

A crossbeam tail rotor blade system provides anti-torque action and directional control. The blades are constructed of graphite and fiberglass. Blade flap and pitch change motions are provided by deflection of the flexible graphite fiber spar. This feature eliminates the need for bearings and lubrication. The spar is a continuous member running from the tip of one blade to the tip of the opposite blade. Electrothermal blankets are bonded into the blade leading edge for deicing. The tail rotor head and blades are installed on the right side of the tail pylon, canted 20° upward. In addition to providing directional control and anti-torque reaction, the tail rotor provides 2.5% of the total lifting force in a hover. A spring-loaded feature of the tail rotor control system will provide a setting of the tail rotor blades to about 10.7° (left pedal) for balance flight at cruise power setting in case of complete loss of tail rotor control.

2-152. Tail Rotor Quadrant.

The tail rotor quadrant contains microswitches to turn on the TR QDRNT FAIL caution message if a tail rotor cable becomes severed. Spring tension allows the quadrant to operate in a normal manner. Electrical power to operate the warning system is provided from No.1 dc primary bus through a circuit breaker marked T RTR SERVO WARN on the copilot's circuit breaker panel.

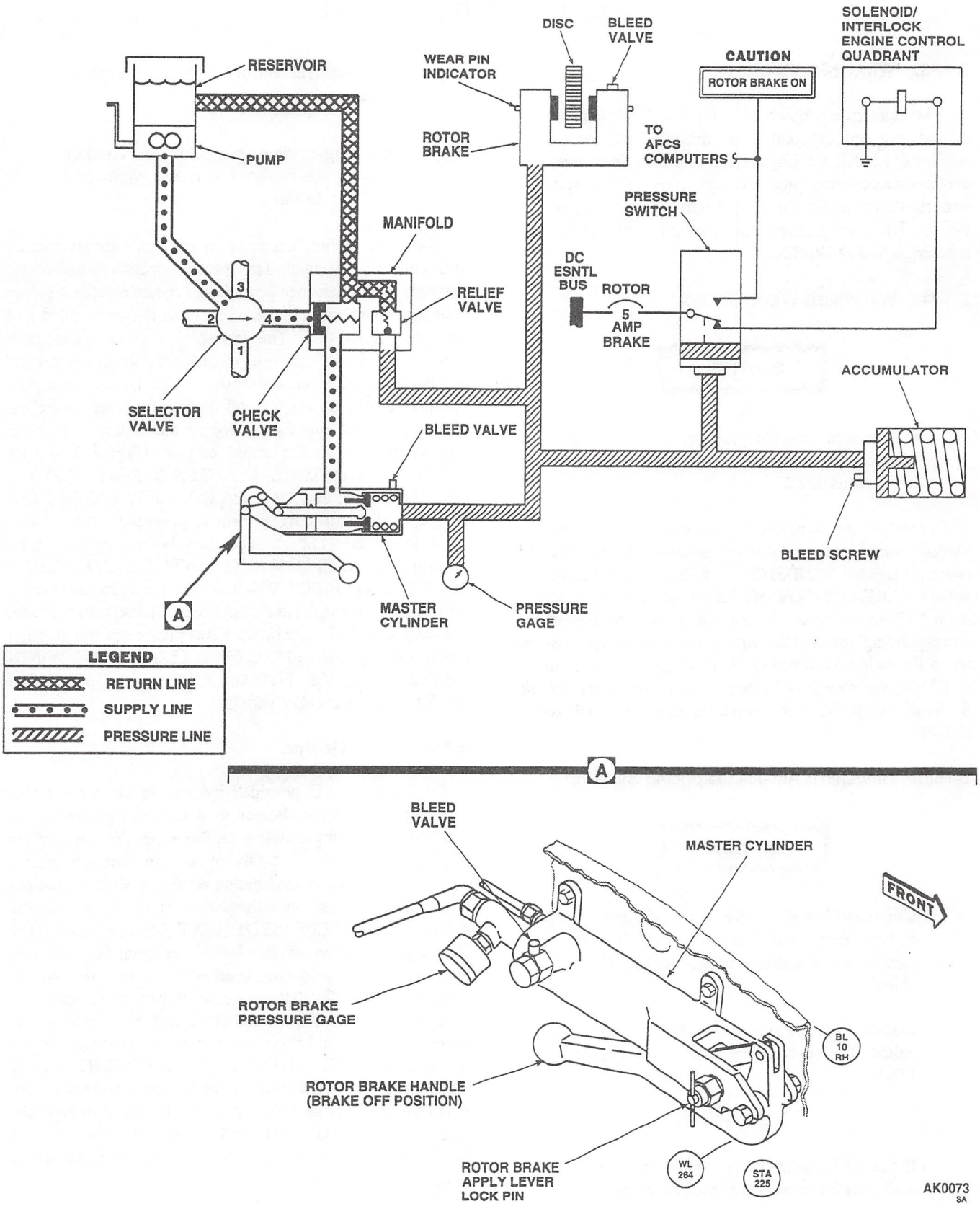

Figure 2-20. Rotor Brake System Diagram

Section IX UTILITY SYSTEMS

2-153. Windshield Wipers.

Two electrically-operated windshield wipers are installed, one on the pilot's windshield and one on the copilot's windshield (Figure 2-1). Both wiper arms are driven by a common motor through flexible drives and converters. Power to the windshield wiper system is provided by the No.1 ac primary bus through a circuit breaker marked WSHLD WIPER.

2-154. Windshield Wiper Control.

CAUTION

To prevent possible damage to windshield surface, do not operate windshield wipers on a dry windshield.

Control of the windshield wipers is through a spring-loaded rotary switch on the upper console (Figure 2-6). The switch is labeled WINDSHIELD WIPER, with marked positions PARK-OFF-LOW-HI. When the switch is turned from OFF to LOW or HI, the wipers will operate at the corresponding speed. The wipers will stop at any position when the switch is turned OFF. When the switch is turned to PARK, the wipers will return to the inboard windshield frame and stop. When the switch is released, it will return to OFF.

2-155. Windshield Anti-ice/Defogging System.

CAUTION

Continued use of a faulty windshield anti-ice system may result in structural damage (delamination and/or cracking) to the windshield.

Do not allow ice to accumulate on the windshield, as ice shedding can cause engine FOD.

NOTE

If the APU generator is the sole source of ac-generated power, the backup pump and the windshield anti-ice cannot be used simultaneously.

With single main generator and backup pump on, the copilot and center windshield anti-ice is disabled.

The pilot, copilot, and center windshields are electrically anti-iced and defogged. Transparent conductors embedded between the laminations provide heat when electrical power is applied. The temperature of each panel is controlled to a heat level about 43°C. The windshield anti-ice system fault monitoring circuit prevents windshield burnout when the windshield surface heat is above 43°C. If heat increases, the monitor circuit will turn off the system. Three switches, one for the pilot, one for the copilot and one for the center windshield, are on the upper console (Figure 2-6) with markings of WINDSHIELD ANTI-ICE: PILOT, OFF and ON; CTR, OFF and ON; and COPILOT, OFF and ON. Power to the anti-icing system is provided by the No.1, No.2 ac primary and ac secondary buses through circuit breakers marked CPLT WSHLD ANTI-ICE, CTR WSHLD ANTI-ICE, and PILOT WSHLD ANTI-ICE located on the pilot and cabin overhead circuit breaker panels. In addition, the No.1 and No.2 dc primary buses provide power through circuit breakers marked CPLT WSHLD ANTI-ICE, WINDSHIELD ANTI-ICE PLT and CTR on the pilot's and copilot's circuit breaker panels.

2-156. Pitot Heater.

Pitot tube heat is provided by heating elements within each pitot tube head. Power to both heating elements is controlled by a single switch on the upper console marked PITOT HEAT, OFF and ON. When the switch is placed ON, current flows to the heating elements. Current sensors in the circuits sense the current flow and keep the caution messages marked LFT PITOT HEAT FAIL and RT PITOT HEAT FAIL turned off. If a heating element fails, the current sensor will detect no current flow, and turn on the caution message for that pitot tube. Power to the pitot tube heaters is provided from the No.1 and No.2 primary ac buses for the left and right pitot tubes through circuit breakers marked LEFT PITOT HEAT and RIGHT PITOT HEAT, respectively. Power to the caution messages is provided by the No.1 and No.2 primary dc buses through circuit breakers marked NO.1 ENG ANTI-ICE WARN and NO.2 ENG ANTI-ICE WARN on the copilot's and pilot's circuit breaker panels.

2-157. Engine and Engine Inlet Anti-Icing Systems.

CAUTION

The engine can incur FOD by improper use of these systems and the other anti-ice/deice systems. For example, ice shedding off the windshield can cause FOD damage to the engines.

Do not rely on the ice detector for the rotor blade deice system for a signal to turn on the engine anti-ice systems. Temperature/ pressure conditions in an engine inlet can cause the inlet to accumulate ice before the ice detector indicates the presence of ice.

a. The engine is anti-iced by two systems; the first described in paragraph b. is called an engine anti-ice system and a second described in paragraph c. called the engine inlet anti-icing system. Both of these systems are turned on by the ENG ANTI-ICE NO.1 and NO.2 switches (Figure 2-6).

b. Engine anti-icing is a combination of bleed-air and heated engine oil. Anti-icing is controlled by a solenoid-operated air valve. The engine anti-ice valve opens during starting and will remain open at low power settings until the engine is approximately 88% NG/30% TQ (variable, determined by the temperature sensed by T2), with anti-ice OFF. The engine anti-ice system is designed so that in the event of an electrical failure the valve reverts to the anti-icing mode and turns on an advisory message indicating ENG 1 AI ON or ENG 2 AI ON. Axial compressor discharge air is bled from stage 5 of the compressor casing, routed through the anti-icing/bleed valve, and delivered to the front frame through ducting. Within the swirl frame, hot air is ducted around the outer casing to each swirl vane, splitter lip, and inlet guide vanes. The hot air is directed within each vane by a series of baffles. Hot engine oil passing within the scroll vanes in the main frame prevents ice buildup. Water, snow, and solids are carried out through the inlet particle separator discharge system. Switches marked ENG ANTI-ICE, NO.1 and NO.2, OFF and ON, control engine and inlet anti-ice. At the ON position, compressor bleed-air is supplied continuously. Power to the anti-icing system is provided by the No.1 and No.2 primary dc buses through circuit breakers marked NO.1 ENG ANTI-ICE and ANTI-ICE WARN and NO.2 ENG ANTI-ICE and ANTI-ICE WARN on the copilot and pilot' circuit breaker panels.

c. The engine air inlets are anti-iced by bleed-air from the engines. Four advisory messages on the warning, caution, and advisory pages marked ENG 1 AI ON, ENG 2 AI ON, ENG 1 INLT AI ON, and ENG 2 INLT AI ON are provided for the engines. When power is initially applied to the aircraft, ENG 1 AI ON and ENG 2 AI ON advisory messages will illuminate; however, with engine running these messages will illuminate only when the ENG ANTI-ICE NO.1 and ENG ANTI-ICE NO.2 switches are placed ON. When the anti-ice system is operating and an engine is started, the inlet anti-ice valve for that engine will close. ENG 1 INLT AI ON and ENG 2 INLT AI ON advisory messages operate from temperature sensed at the engine inlet fairing. When the temperature reaches about 93°C, the temperature switch will turn on the appropriate engine inlet anti-ice on advisory message. If this message goes on with the ENG ANTI-ICE NO.1 and NO.2 switch placed in the OFF position, it indicates that heat is being applied to that engine inlet and a malfunction exists. Inlet anti-icing will turn on if dc primary power failure occurs; dc electrical power is applied to keep the valve closed. However, when temperatures are within 4 to 13°C or above, a pneumatic/ mechanical operation controlled by a temperature sensor will not allow this valve to open if the ENG ANTI-ICE NO.1 and NO.2 switches are ON. At engine power levels of 10% TQ per engine and below, full inlet anti-ice capability cannot be provided due to engine bleed limitations. Power to the valves is normally provided from the No.1 and No.2 dc primary buses through circuit breakers marked NO.1 and NO.2 ENG ANTI-ICE on the copilot and pilot's circuit breaker panels, respectively. During engine start, power to the No.1 engine inlet anti-ice valve is provided by the dc essential bus through a circuit breaker marked NO.1 ENG START on the upper console. ENG 1 INLT AI ON and ENG 2 INLT AI ON advisory message sensors receive power from No.1 and No.2 dc primary buses through circuit breakers marked NO.1 ENG ANTI-ICE WARN and NO.2 ENG ANTI-ICE WARN, respectively.

2-158. Rotor Blade Deice System.

The rotor blade deice system (Figure 2-21) consists of the following: BLADE DEICE control panel, BLADE DE-ICE TEST panel, system controller, power distributor, main and tail sliprings, main and tail blade heating elements, droop stop heaters, caution lights, outside air temperature (OAT) sensor, and an icing rate meter subsystem. The blade deice system provides improved mission performance in icing conditions by applying controlled electrical power to integral heating elements in the main and tail rotor blades, causing the ice bond layer to melt, allowing symmetrical ice shedding. Droop stop heaters apply heat to the droop stop hinge pins, to prevent icing and permit proper operation. The heaters are electrically powered continuously whenever the blade deice system is operating, either with the power switch ON, or the system in the TEST mode.

The blade deice system, excluding element-on-time (EOT) failure may be ground checked using the APU generator. To prevent generator overload when only the APU generator is operating, an interlock system is installed to inhibit blade deice test if the backup pump is operating. If the backup pump should go on during the test cycle, the MR DEICE FAIL caution message will go on immediately, alerting the crew to an invalid test attempt. The test cycle must then be initiated again. The OAT sensor, installed below the windshield, provides a signal to the controller for heating EOT of the rotor blades. The signal is developed by a passive OAT sensor using a platinum resistance temperature detector as the sensing element. The lower the OAT sensor resistance, the longer EOT will be. To reduce power requirements, the blades are deiced in cycles. Power to the blade deice system is provided from the No.1 ac and No.2 dc primary buses through circuit breakers marked ICE DETECT, TR DE-ICE PWR, ICE DET, and DE-ICE CNTRLR on the cabin overhead circuit breaker panel. Main blade deice power is routed through current limiters in the deice junction box. When one main generator is inoperative, deice power can be supplied by the APU generator.

2-159. Blade Deice System Operation.

The ice detector is operational anytime power is applied to the helicopter. The ice detector senses ice accumulation on a vibrating probe by a change in probe frequency. The frequency change is processed by the ice rate meter. The ice rate meter (Figure 2-21) provides a visual display of icing intensity, T (trace), L (light) blue, M (moderate) yellow, and H (heavy) red. Also, the ice rate meter sends a signal to the ICE DETECTED caution message when the BLADE DEICE panel POWER switch is off, informing the pilot of the requirement to turn on the system. When the system has been turned on by placing the POWER switch ON, the ice detector aspirator heater is turned on, and the ICE DETECTED caution message is turned off. If the MODE switch is at AUTO, the rate meter sends an ice rate signal to the controller. The controller processes the ice rate signal to produce heater off time, and the OAT signal to produce the heater EOT. The controller sends command signals through the main rotor sliprings to the system distributor which responds to controller signals by switching power in sequence to the main rotor blade heater zones. Tail rotor blade power is switched directly by the controller and sent through the tail rotor sliprings to the tail rotor blades. A tail blade distributor is not required since the power is applied to the four tail blades simultaneously. The deice control panel contains a rotary switch which allows automatic or manual control of blade heater off time. In AUTO (automatic), the ice rate signal is passed on to the controller, which results in off-time variations proportional to the ice rate. In MANUAL, T, L, or M, fixed signals are transmitted to the controller, resulting in fixed off time. Ice rate subsystem malfunctions are indicated by appearance of a FAIL flag on the rate meter face, requiring operation of the blade deice system in one of the three manual modes. MANUAL mode should also be used when the rate meter has no indicated malfunction, but any of these three conditions has occurred: (1) pilot has determined by his judgment of ice intensity that the ice rate system is inaccurate, (2) torque required has increased to an unacceptable level, and (3) helicopter vibration has increased to an unacceptable level. During a single main generator failure, blade deice will be dropped until the APU is started and the APU generator switch is placed at ON. Even though the APU generator switch is ON and providing power to the blade deice system, the APU ON advisory message will not be on because one main generator is operating.

2-160. Blade Deice System Control Panel.

All controls for operating the rotor blade deice system are on the BLADE DEICE control panel (Figure 2-21). Controls are described as follows:

CONTROL	FUNCTION
POWER switch	
TEST	Electrically test main and tail rotor deice system for one test cycle.
ON	Turns on power to blade deice controller and turns off ICE DETECTED caution message.
OFF	Turns off deice system.
TEST IN PROGRESS	Green light goes on during test cycle. At end of test cycle, light should go off.
MODE Selector	
AUTO	System off time is controlled by ice rate signal.
MANUAL	Gives pilot manual control of system off time.
T	Sets a fixed off time for trace icing.
L	Sets a fixed off time for light icing.

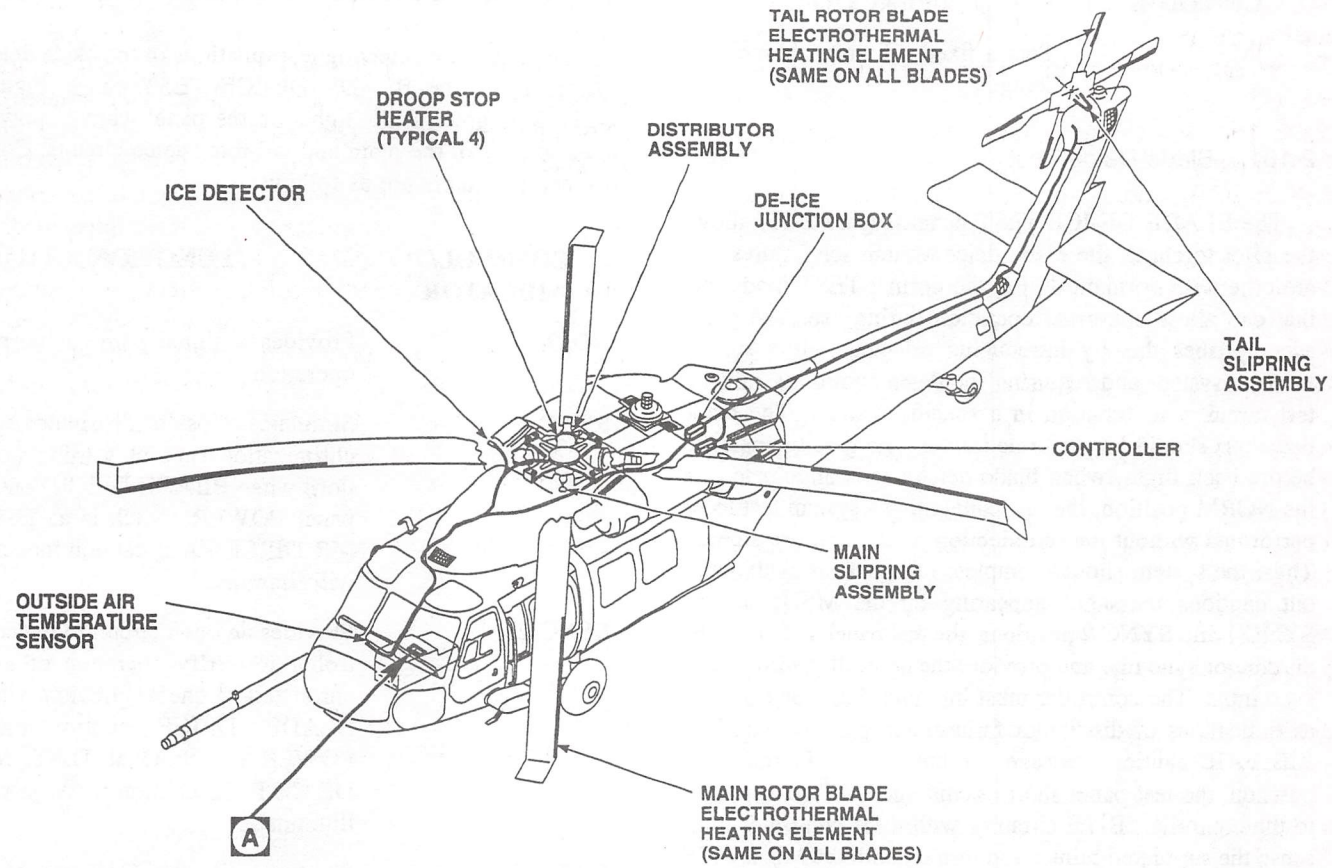

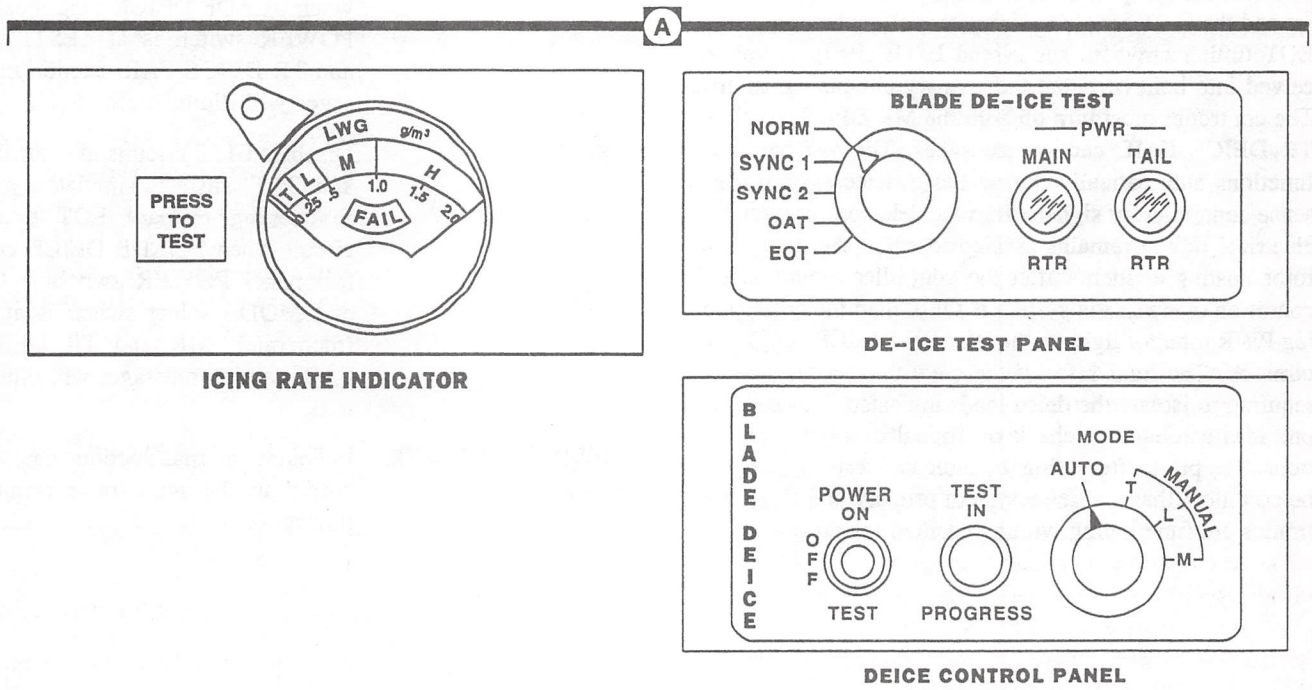

Figure 2-21. Rotor Blade Deice System

CONTROL	FUNCTION
M	Sets a fixed off time for moderate icing.

2-161. Blade Deice Test.

The BLADE DE-ICE TEST panel (Figure 2-21) allows the pilot to check the blade deice system for failures that are otherwise dormant during the normal TEST mode, but that can allow abnormal operation during use. The panel accomplishes this by introducing selected failure signals into the system and requiring the deice controller built-in-test circuitry to function in a specific manner. The blade deice test should be performed during the ground checkout before each flight, when blade deice use is anticipated. In the NORM position, the test panel allows system test to be performed without the introduction of false failure signals. Thus, the system should complete its checkout cycle without cautions messages appearing on the MFDs. In the SYNC 1 and SYNC 2 positions, the test panel interrupts the distributor sync line and provides the controller with a false sync input. The controller must interpret these false signals as indications of distributor failure, and produce MR DE-ICE FAIL caution message for both cases. In the OAT position, the test panel short circuits the OAT sensor input to the controller. BITE circuitry within the controller must sense the simulated failure and turn on both the MR DEICE FAIL and TR DEICE FAIL caution messages. In the EOT position, the test panel biases BITE circuitry in the controller and the OAT sensor to simulate malfunctioning primary EOT timing circuits. The biased BITE circuit is thus deceived into believing that the primary circuits are in error. The controller must turn on both the MR DEICE FAIL and TR DEICE FAIL caution messages. The test panel also functions automatically during blade deice system use to sense contradictory signals from the deice power circuits. If electrical power remains applied to either the main or tail rotor heating elements after the controller signals a FAIL condition or when the system is OFF, then the corresponding PWR monitor light on the BLADE DE-ICE TEST panel turns on. The light informs the crew that further action is required to isolate the deice loads indicated. The test panel provides a reliability check of critical deice system functions. The pilot, after doing the indicated tests properly, can be confident that the deice system primary and BITE electronics are functioning within specified tolerances.

2-162. BLADE DE-ICE TEST Panel.

The control for selecting test functions of the blade deice system is on the BLADE DE-ICE TEST panel (Figure 2-21). Two green PWR lights on the panel warn of power malfunctions of the main and tail rotor deice circuits. Control and indicators are as follows:

CONTROL/ INDICATOR	FUNCTION
NORM	Provides a signal path for normal operation.
SYNC 1	Simulates a loss of distributor synchronization (not in starting position) when BLADE DEICE control panel POWER switch is at TEST. MR DEICE FAIL caution message will illuminate.
SYNC 2	Provides an open circuit to the controller to verify operation of synchronization check circuitry when BLADE DEICE control panel POWER switch is at TEST. MR DEICE FAIL caution message will illuminate.
OAT	Short circuits the OAT sensor to check BITE circuit sensing a fault when BLADE DEICE control panel POWER switch is at TEST. MR and TR DEICE FAIL caution messages will illuminate.
EOT	Disables BITE circuits in controller and OAT sensor to simulate a malfunctioning primary EOT timing circuit when BLADE DEICE control panel POWER switch is ON and MODE select switch is at M (moderate). MR and TR DEICE FAIL caution messages will illuminate.
PWR MAIN RTR light	Indicates a malfunction has occurred in the main rotor primary power.

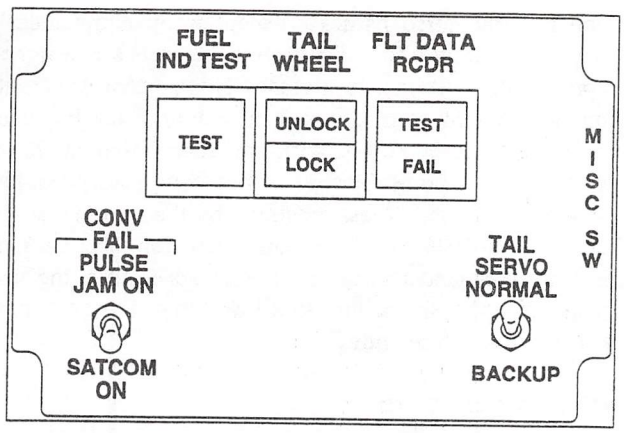

Figure 2-22. Miscellaneous Switch Panel

CONTROL/ INDICATOR	FUNCTION
PWR TAIL RTR light	Indicates a malfunction has occurred in the tail rotor primary power.

2-163. Miscellaneous Switch Panel.

The MISC SW panel located on the lower console (Figure 2-7 and 2-22). This panel controls operation of the tail wheel lock and tail rotor servo, provides test functions for the fuel readouts and flight data recorder, and power to the pulse jammer radar or SATCOM radio when one converter fails. The following controls and indicators are on the MISC SW panel:

CONTROL	FUNCTION
FUEL IND TEST Pushbutton	Verifies operation of fuel quantity digital readouts. Fuel values on engine instrument page decrease when TEST button is depressed.
TAIL WHEEL Pushbutton	Lighted switch, LOCK illuminates when tail wheel is locked and UNLOCK illuminates when tail wheel is unlocked.
FLT DATA RCDR Pushbutton	Press to test, TEST illuminates during test cycle. FAIL illuminates when flight data recorder is inoperative.
TAIL SERVO Switch	
NORMAL	Selects the first stage tail rotor servo for operating the tail rotor.
BACKUP	Selects the second stage tail rotor servo for operating the tail rotor.
CONV FAIL Switch	**NOTE** In the event of a converter failure, the CONV FAIL switch must be placed at the PULSE JAM ON position for the pulse jammer to operate. If use of the pulse radar jammer is anticipated, the CONV FAIL switch should be place at the PULSE JAM ON position to prevent loss of pulse jammer operations if a converter fails.
PULSE JAM ON	Selects the pulse radar jammer for operation when one converter has failed.
SATCOM ON	Selects the power amplifier for SATCOM radio operation when one converter has failed.

2-164. Blackout Curtains.

Curtains are provided to cover the cabin windows and the opening between the pilot's compartment and the cabin. Velcro tape is bonded to the cabin structure and the curtains with an adhesive. Loops are attached to the curtains to aid removal. Curtains are provided as a kit.

2-165. Wire Strike Protection System.

The system is a simple, lightweight, passive system with no motorized or pyrotechnic components used to cut, break, or deflect wires that may strike the helicopter in the frontal area between the tires and fuselage, and between the fuselage and main rotor in level flight. Protection is provided against horizontally strung wire at 60° - 90° to the flight path by cutting or deflecting 1x7 strand steel cable up to 3/8 inch in diameter having a ultimate strength of up to 11,000 pounds. The system consists of cutters and deflectors (Figure 2-1) located on the fuselage and landing gear supports. They are: upper cutter on the rear of the sliding fairing, the pitot cutter/deflector on the front of the sliding fairing,

windshield post and wiper deflectors, door hinge deflector, step extension and step deflector (left side only), landing gear joint deflector, main landing gear cutter/deflector, and tail landing gear deflector.

2-166. Flight Data Recorder.

Provision for a flight data recorder system is installed in the aft transition avionics compartment. Flight data input to the recorder is sent from different locations throughout the helicopter. The flight data recorder will begin recording data as soon as AC and DC essential power is supplied to the helicopter. Electrical power to operate the data recorder system is provided from the DC ESNTL BUS through a circuit breaker marked FDR on the upper console.

2-167. Troop/Troop Commander Seats.

Cabin troop seats (Figure 2-23) will accommodate up to fourteen troops including the crew chief, gunner, and troop commander. A troop commander seat is installed between the gunners seats, which faces forward only. Each seat has a lap belt and torso harness (except troop commander's seat), for restraint in four directions. The seats are designed to protect the occupant in a crash. This is done by an attenuating system consisting of an energy-absorbing telescopic leg brace combined with two rotary attenuators on the seat back support cables. The troop commander seat has a seat belt only and is less crashworthy than normal seats. Refer to Chapter 6 for troop seat installation. The back of the troop commander's seat must be detached from the suspension rings on the ceiling to allow entry. The seat must be reattached before sitting.

2-168. Door Locks.

Key door locks are installed on each of the cabin and cockpit compartment doors. A common key is used to lock and unlock the cockpit and cabin doors from the outside to secure the helicopter. Each crew chief/gunner's sliding window is locked from the inside only. Addition door locks are installed on the nose avionics, transition, and AN/ALQ-136 access doors.

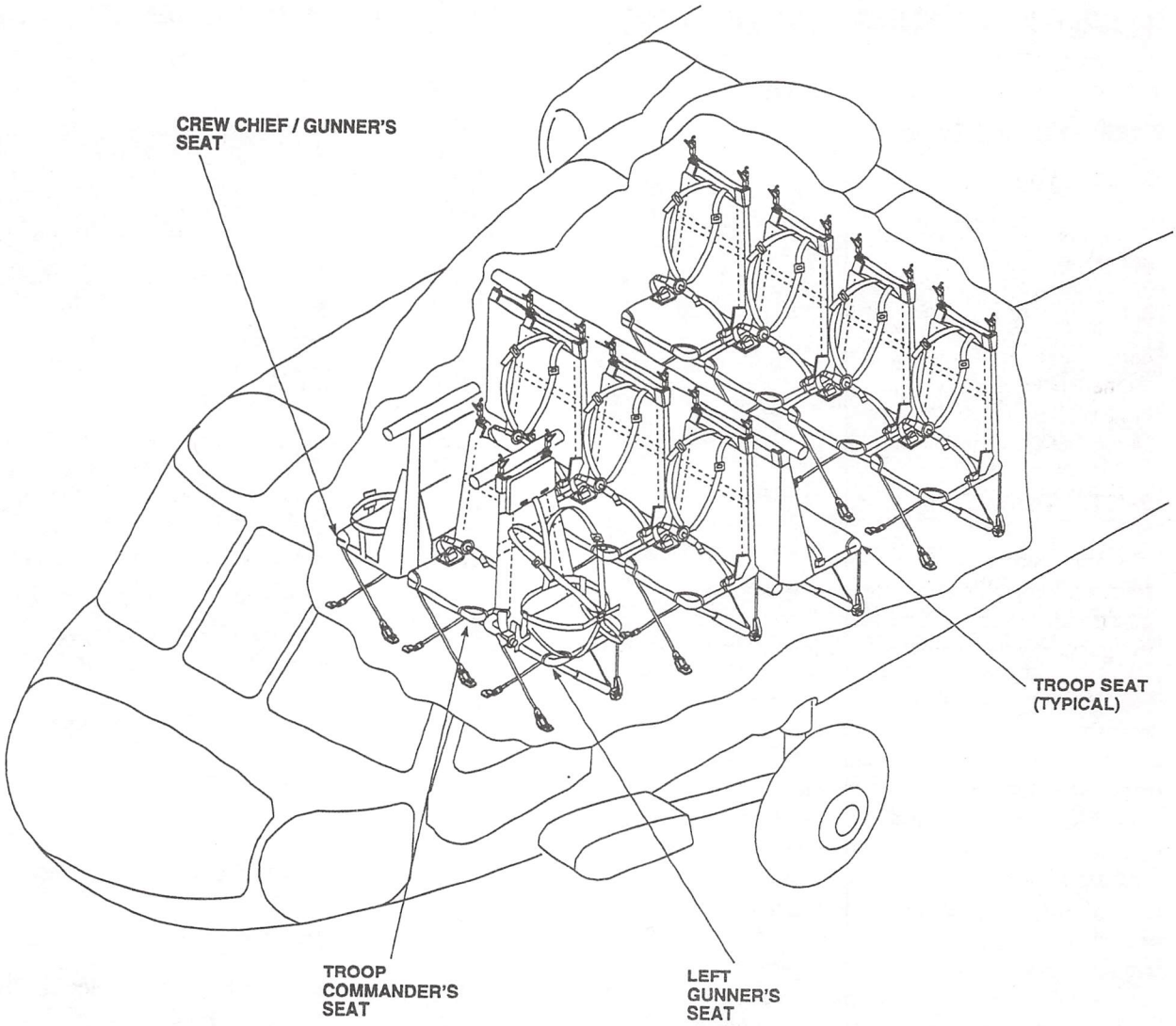

Figure 2-23. Troop Seats (Typical Arrangement)

Section X HEATING, VENTILATION, COOLING, AND ENVIRONMENTAL CONTROL UNIT

2-169. Heating System.

The heating system is equipped with a winterized heater subsystem. The subsystem consists of a heated air source, cold air source, mixing unit, temperature sensing unit, overtemperature sensor, controls, ducting and registers. The heating system is a bleed-air system and bleed-air is supplied in flight by the main engines, and on the ground by the main engines or the APU. An external connector allows connection of an external ground source in to the pneumatic system, that can provide heat when connected. The winterized heater subsystem has a high bleed-air flow mixing valve and a modulation valve. The mixing valve has the capacity to keep the interior temperature of the helicopter at 4°C with ambient temperatures down to -54°C. The mixture sensor controls air mixing to allow control of temperature used for cabin heat. Bleed-air is mixed with ambient air to get the desired temperature selected by the variable HEATER temperature control on the upper console (Figure 2-6). Bleed-air is regulated with the modulation valve for downstream mixing with ambient air when the HEATER control switch is ON. Overtemperature is prevented by a overtemperature sensor that de-energize a solenoid valve when bleed-air temperature reaches 93 ±3°C in the mixing chamber. At the inlet to the mixing valve, a second temperature sensor controls the winterization valve to limit the amount of outside air that is allowed into the mixing chamber when bleed-air temperature is below 93 ±3°C. The temperature sensors control current flow to the on-off solenoid and the winterization solenoid to hold them energized, allowing bleed-air to flow to the mixing chamber. When an engine anti-ice switch is placed ON or a dc power failure occurs, the winterization solenoid will de-energize. An interlock system between engine anti-ice system and the heater winterization solenoid valve prevents engine overbleed by reducing bleed-air flow to the heater when an engine anti-ice switch is ON. Power to the electrical components of the heating system is by the No.1 dc primary bus through a circuit breaker marked AIR SOURCE HEAT/START.

2-170. Heat and Ventilation Controls.

A variable control air mixing valve assembly is used to control the temperature of air for cabin heating in the helicopter. Bleed-air from the engine, APU, or external source is mixed with ambient air to obtain the desired temperature determined by the setting of the sensor in the downstream air flow. Regulation of the diaphragm position is by a solenoid. Should the HEAT control switch (Figure 2-6) be turned OFF, or dc power fail, bleed-air will shut off. The valve also has a thermal protective switch that de-energizes the solenoid if mixed air temperature is over 93 ±3°C. The mixture temperature sensor downstream of the mixing valve regulates flow output temperature. The sensor is regulated from the cockpit through a control linkage at the overhead console. The temperature control is marked HEATER OFF, MED, and HI. Ventilation is controlled through a panel on the upper console marked VENT BLOWER. When the switch is placed ON, the vent blower pulls outside air into the aircraft.

2-171. Normal Operation.

1. APU or engine - start. (Refer to paragraph 8-21 or 8-22.)
2. AIR SOURCE HEAT/START switch - as required. ENG if engine is operating; OFF for heat from external power unit.
3. HEATER ON OFF switch - ON.
4. VENT BLOWER switch - OFF for maximum heat.
5. HEATER variable control - as desired.

2-172. Ventilation System.

The helicopter is ventilated by an electrically-operated blower system controlled through the VENT BLOWER control panel on the upper console (Figure 2-6). The VENT BLOWER switch is marked OFF and ON. When ON, the blower forces ambient air into the cabin ducts. The No.2 ac primary bus powers the blower through a circuit breaker marked HEAT VENT. It is also controlled by dc power from the No.2 dc primary bus through the VENT BLOWER switch protected by a circuit breaker marked HEAT VENT. Ram air vents for cooling the cockpit area are on each side of the upper console and at the front of the lower console (Figure 2-4) and are controlled by turning the nozzle to control the opening. Placing the VENT BLOWER switch to the ON position will turn on the vent blower motor on.

2-173. Avionics Cooling System.

Cooling fans are provided for air circulation in the nose compartment, aft transition area, radar detector/jammer, Inertial Navigation Unit (INU), and cabin avionics racks. Thermal switches in the power circuits will turn on or off the respective fan, except for the INU fan, as the ambient

temperature reaches the switch activation/deactivation level. Power for the fan motors is provided by the No.1 and No.2 ac primary buses through circuit breakers on the cabin overhead, lower center console, and copilot's auxiliary circuit breaker panels marked AVIONICS COOLING AFT, R RACK (3 CBs), L RACK (2 CBs), INU FAN, AVIONICS COOLING CONSOLE, AVIONICS COOLING EQPT, and RDR JAM FAN. Power for the thermal on/off circuits is provided by the No.1 and No.2 dc primary buses through circuit breakers on the cabin overhead and pilot's circuit breaker panels marked AVIONICS COOLING NOSE and AVIONICS COOLING AFT.

Section XI ELECTRICAL POWER SUPPLY AND DISTRIBUTION SYSTEMS

2-174. Electrical Power Systems.

Alternating current (ac) is the primary source of power. The primary electrical system consists of two independent systems, each capable of supplying the total helicopter power requirements. The prime source of each system is a 115/200 vac generator. A subsystem feeds two independent ac primary buses, two ac essential buses, and an ac secondary bus. A portion of each ac primary bus load is converted to 28 volts direct current (vdc) by two 200 ampere ac/dc converters. The 28 vdc is distributed by two independent dc primary buses and a dc essential bus. Emergency power is provided by a generator driven by the auxiliary power unit (APU). The APU generator is capable of supplying all flight-essential ac and dc bus loads. In addition, the APU generator can supply power to the blade deice system if one main generator should fail. Should a second generator fail, the blade deice load will be dropped and the APU generator will power the remaining ac bus loads. An electric power priority feature allows either the No.1 and No.2 main generator to automatically supersede the APU generator, which automatically supersedes external power. A 24-volt battery provides backup dc power.

2-175. DC Power Supply System.

Primary dc power is obtained from two converters (transformer-rectifiers) with a battery as the secondary power source. There is no external dc power connector (Figure 2-24).

2-176. Converters.

Two 200-ampere converters normally powered by the No.1 and No.2 ac primary buses, converts ac power into dc power and reduces it to 28 volts. The converter output is applied to the No.1 and No.2 dc primary buses whenever ac power is applied to the ac primary buses. If one converter's output is lost, the converter load will be transferred to the operating system, and a caution message marked #1 CONV FAIL or #2 CONV FAIL will go on. Power to the caution message sensor is provided by the battery bus through a circuit breaker marked AC/CONV WARN.

2-177. Battery.

A 24-volt dc 5.5 ampere hour 20-cell battery provides secondary or emergency dc power. The battery is in the cabin section behind the lower console. It supplies dc power to the BATT and BATT UTIL buses (Figure 2-24) for operating dc essential equipment during primary dc malfunction. Power to the battery bus is controlled by the BATT switch on the upper console. It has marked positions OFF and ON. The battery utility bus is connected directly to the battery. During No.1 and No.2 dc primary source malfunction, the dc essential bus is powered by the battery bus as long as the battery is at least 35% charged and the battery switch is on. When only battery power is available, the battery life is about 22 minutes day and 14 minutes night for a battery 80% charged. The BATT switch should be ON when either external power, APU generator, or main generator power is applied to the helicopter. This will recharge the battery. When the battery is the sole source of dc power, the BATT switch should be turned off immediately upon obtaining a BATT LO CHARGE caution message. A malfunction of both dc primary sources will activate caution messages marked #1 CONV FAIL and #2 CONV FAIL. If the BATT switch is left ON, the battery will be completely discharged in less than 3.5 hours. If the maintenance light and both cockpit utility lights are left on, the battery will be completely discharged in less than 7 hours. Power to the caution message sensor is provided by the battery bus through a circuit breaker marked ESNTL WARN EXT PWR CONTR on the lower center console.

2-178. DC Monitor Bus.

The No.1 and No.2 dc monitor buses are energized normally by the No.1 and No.2 converters when the generators are operating or external power is applied (Figure 2-24). If either converter should fail, the buses will be automatically dropped from the system.

2-179. Battery Charger/Analyzer.

A charger-analyzer system restores the battery charge and determines the condition of the battery. The system charges the battery through a converter whenever ac power is available on the helicopter and the BATT switch is ON. The analyzer system monitors battery charge and activates the BATT LO CHARGE caution message on the MFDs and BATT FAIL light on the upper console when the charge is 40 ±5% of battery capacity. If battery charge continues to lower, 35 ±5% of battery capacity, the dc essential bus will be disconnected from the battery. At 35% capacity, the battery can provide two APU starts. Another analyzer circuit monitors battery temperature. When the internal temperature reaches 70°C, or if a battery cell dissimilarity condition exists, the BATTERY FAIL caution message and BATT FAIL capsule on the upper console will illuminate. Then the charger/analyzer should automatically disconnect the battery from the charging circuit. As a backup, placing the BATT switch to OFF removes input power to the charger/analyzer. By placing the battery switch

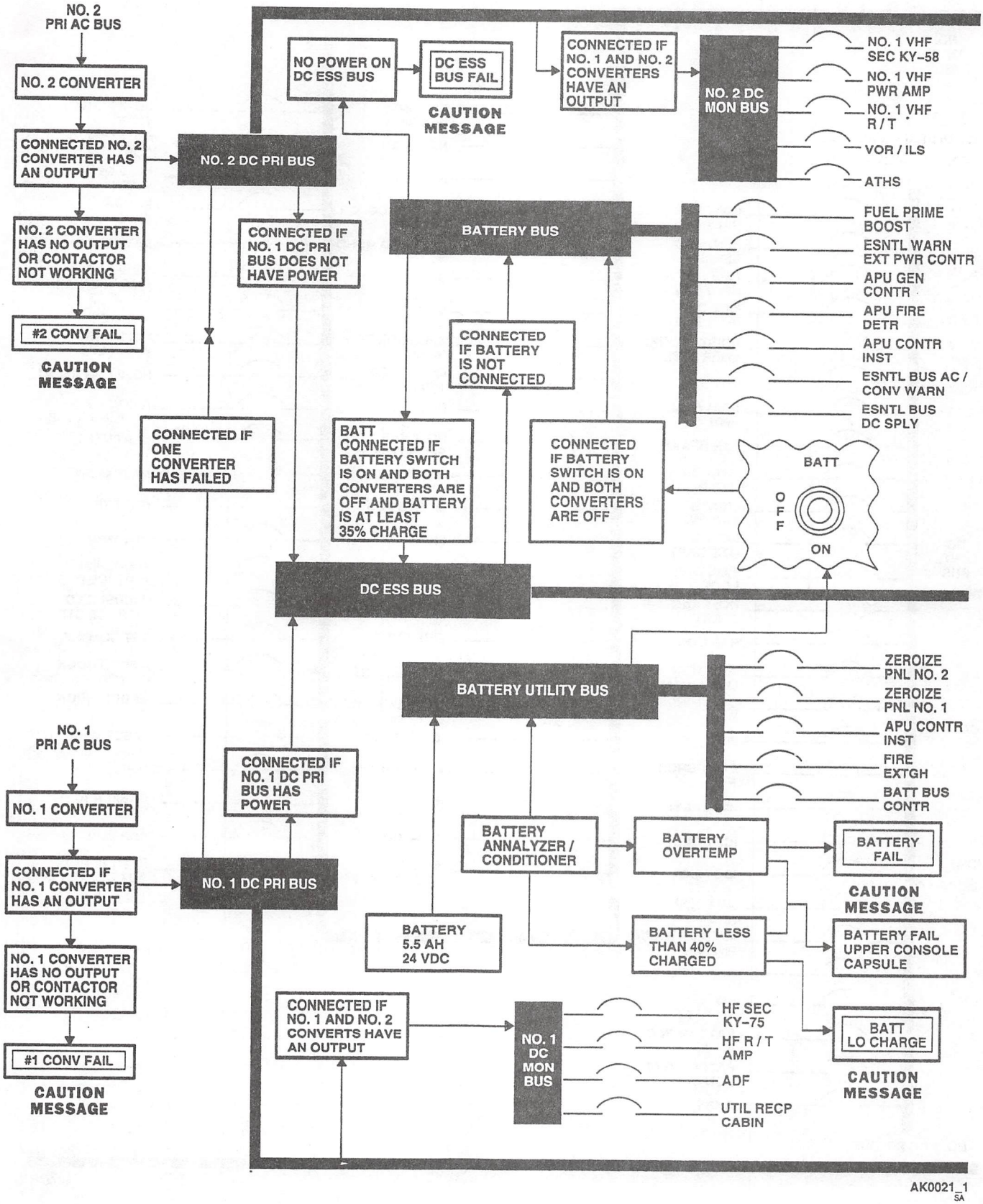

Figure 2-24. DC Power System - General Block Diagram (Sheet 1 of 3)

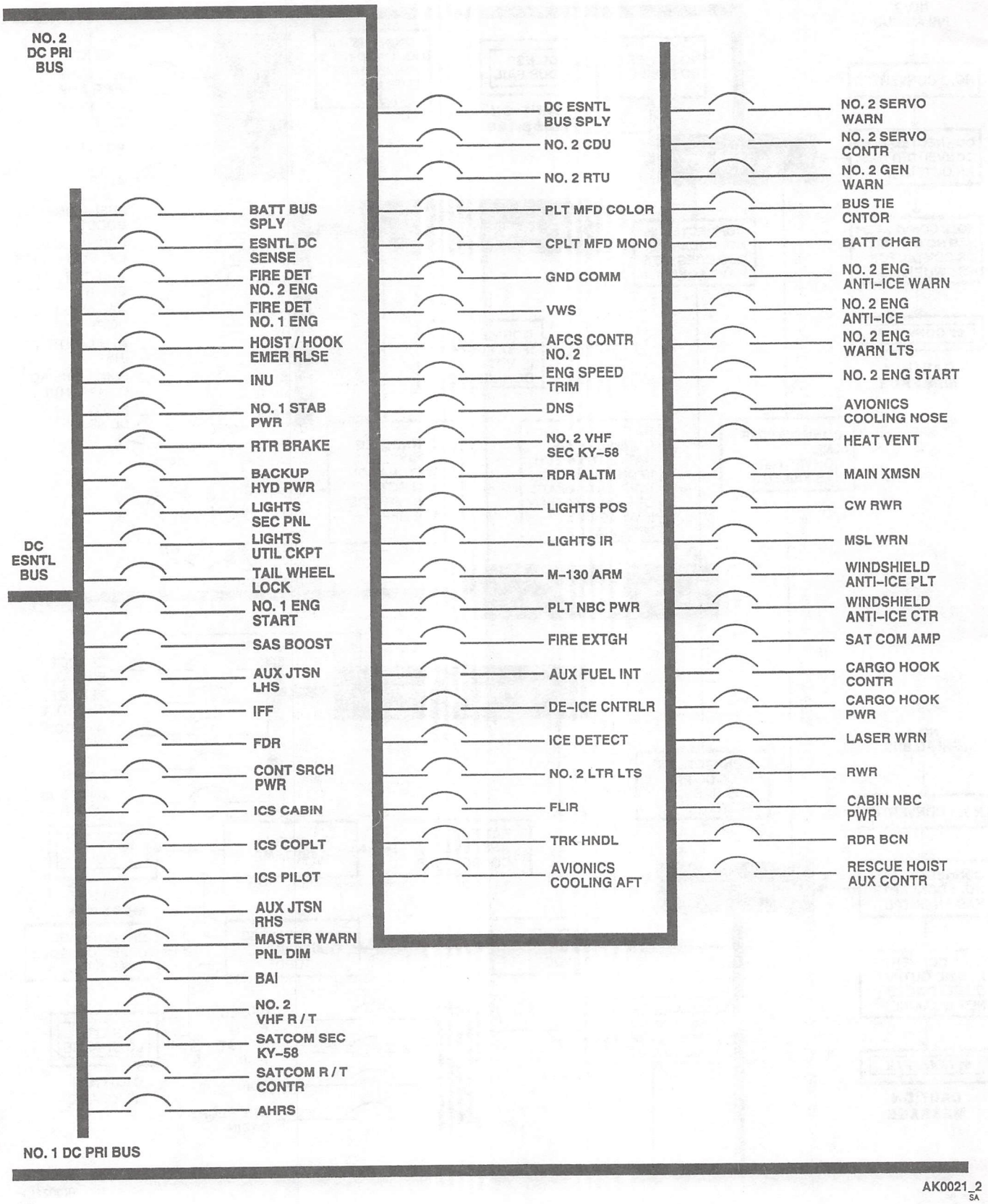

Figure 2-24. DC Power System - General Block Diagram (Sheet 2 of 3)

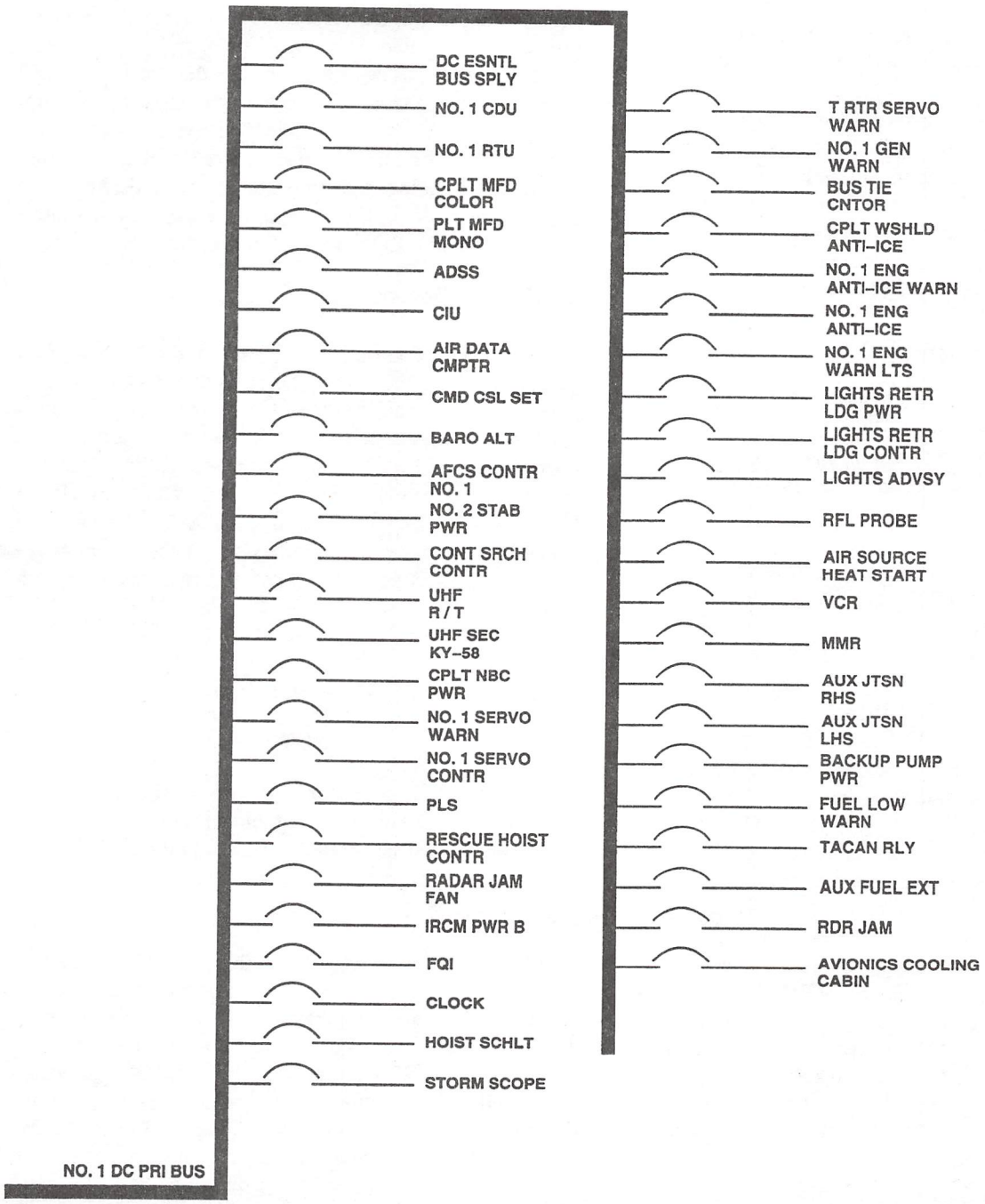

AK0021_3
5A

Figure 2-24. DC Power System - General Block Diagram (Sheet 3 of 3)

to OFF, the increasing temperature may be checked. Power to the battery charger/analyzer is provided by the No.2 dc and No.2 ac primary buses through circuit breakers marked BATT CHRG on the pilot' circuit breaker panel.

2-180. DC and AC Circuit Breaker Panels.

Seven circuit breaker panels (Figure 2-25) protects the power systems. One is above and to the rear of the pilot and copilot, one is in the cabin overhead, one is on the lower console, one in the copilot overhead adjacent to the upper console, and two are on the upper console. The circuit breakers provide both ac and dc protection. Popping of a circuit breaker indicates too much current is being drawn by the component(s) in which that circuit breaker protects. Unnecessary recycling of circuit breakers, or using circuit breakers as a switch should be avoided.

2-181. AC Power Supply System.

NOTE

When a #1 GEN BEARING or #2 GEN BEARING caution message remains on for more than 1 minute, make an entry on the DA Form 2408-13-1.

Two primary ac power system (Figure 2-26) delivers regulated three phase, 115/200 vac, 400 Hz. Each system contains a 30/45 kilovolt-ampere generator mounted on and driven by the transmission accessory gear box module, a current transformer, a generator control unit, and current limiter; all components are interchangeable between system. System outputs are applied to the No.1 and No.2 ac primary buses. The #1 GEN FAIL or #2 GEN FAIL caution message will go on, whenever that generator output is interrupted. In addition, the AC ESS BUS OFF caution message will illuminate when there is no power to the No.2 ac essential bus. Individual generator controls are on the upper console (Figure 2-6), with marked positions of TEST, OFF RESET, and ON. A generator main bearing caution sensor is installed on each main generator to activate a caution message marked #1 GEN BEARING or #2 GEN BEARING which indicates a worn or failed bearing. The caution message will remain on until power is removed. The auxiliary bearing will allow 10 additional hours of operation after the message goes on. Therefore, it should not be a cause for mission abort. Power to the caution system is provided by the No.1 and No.2 dc primary buses through circuit breakers marked NO.1 GEN WARN and NO.2 GEN WARN, respectively.

2-182. Generator Control Units.

The No.1 and APU generator control units are located on the upper left cabin, and the No.2 generator control unit is located on the upper right cabin. They continuously monitor and regulate generator ac output to provide voltage regulation, overvoltage protection, undervoltage protection, feeder fault protection, current limiting, and underfrequency protection. Voltage and current regulation, overvoltage, undervoltage, feeder fault, and current limiting protection are provided during all flight and ground operations. Underfrequency protection for the No.1 and No.2 generator control units is provided only during ground operation. If an overvoltage or undervoltage occurs, the protection circuit disables and disconnects the generator from the ac load. During flight operations, the underfrequency protection circuits in the No.1 and No.2 generator control units are intentionally disabled through the WOW switch.

2-183. AC Secondary Bus.

The ac secondary bus is powered by the No.1 or No.2 generators, when the generators are operating and their outputs are acceptable (Figure 2-26). Current limiters protect the system from excessive current draw. If a single generator fails and the back up pump is operating, the ac secondary bus is dropped and can be powered by the APU. If the No.1 and No.2 generators are off, the APU generator will supply power to the ac secondary bus if the output is acceptable. The ac secondary bus can also receive power from an external power source when the No.1, No.2, and APU generators are off.

2-184. Auxiliary AC Power System.

NOTE

If the APU generator is the sole source of ac generated power, all equipment may be operated; except when the backup pump is on, the windshield anti-ice is prevented from being used.

The auxiliary ac power system (Figure 2-26) is a backup ac power source providing electrical power for ground checkouts. The system consists of a 115 vac three-phase, 400 Hz 35kVA, air-cooled generator mounted on and driven by the APU, a current transformer, and a generator control unit. If the primary ac generators are not operating, the auxiliary ac power output will be applied through conductors to the No.2 primary ac bus, and through conductors and current limiters to the No.1 primary ac bus. The APU generator control switch on the upper console (Figure 2-6),

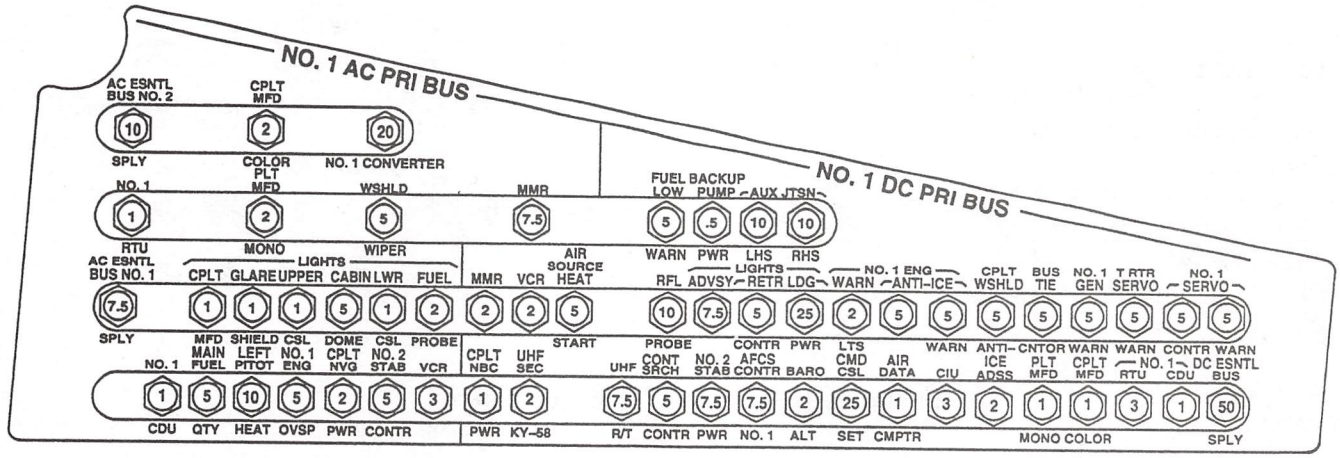

COPILOT CIRCUIT BREAKER PANEL

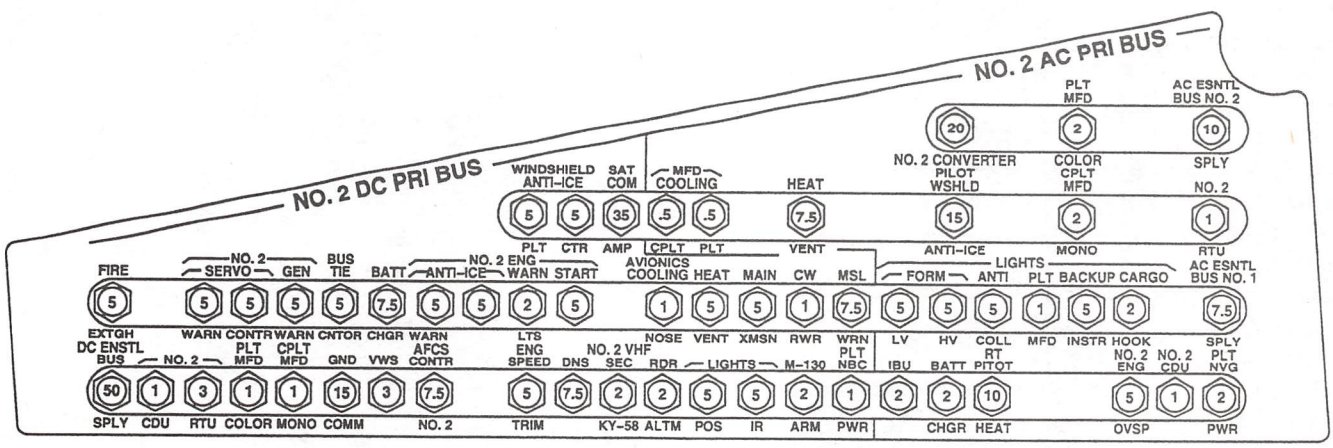

PILOT CIRCUIT BREAKER PANEL

AK0023_1
5A

Figure 2-25. DC and AC Circuit Breaker Panels (Sheet 1 of 3)

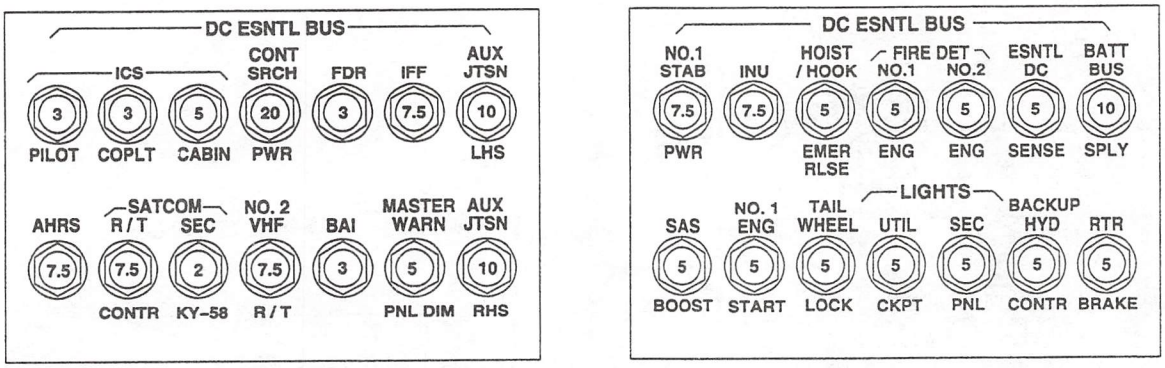

UPPER CONSOLE CIRCUIT BREAKER PANEL

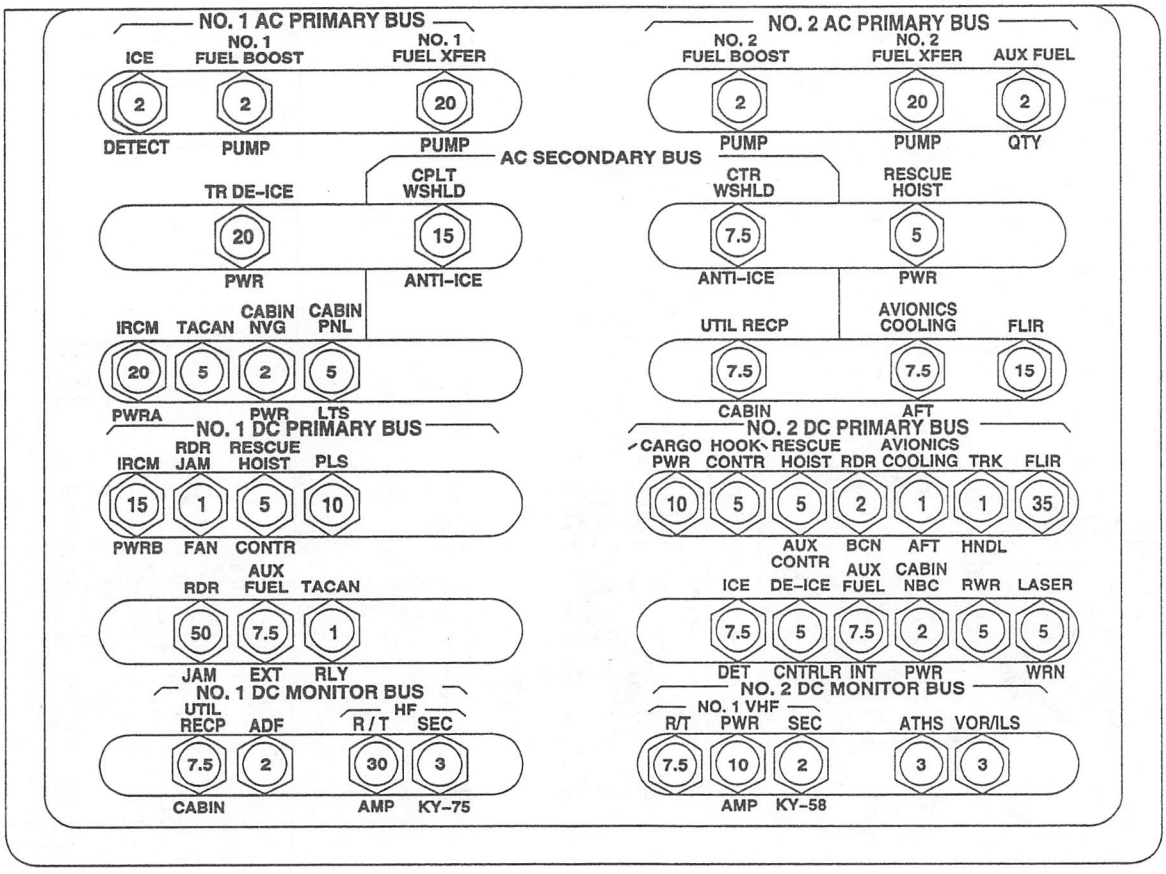

CABIN OVERHEAD CIRCUIT BREAKER PANEL

AK0023_2
SA

Figure 2-25. DC and AC Circuit Breaker Panels (Sheet 2 of 3)

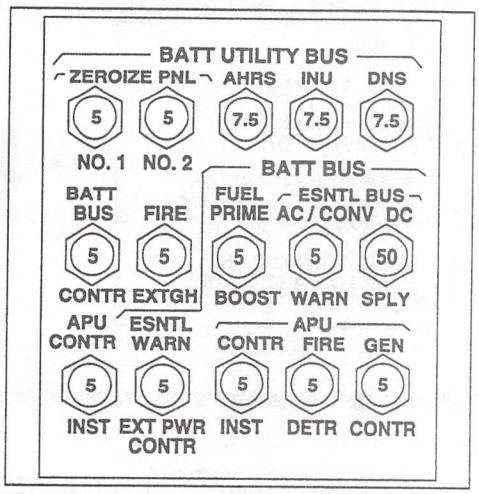

LOWER CONSOLE
CIRCUIT BREAKER PANEL

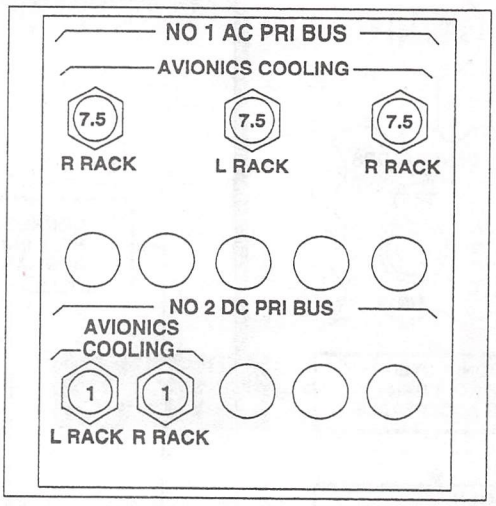

LOWER CONSOLE
CIRCUIT BREAKER PANEL

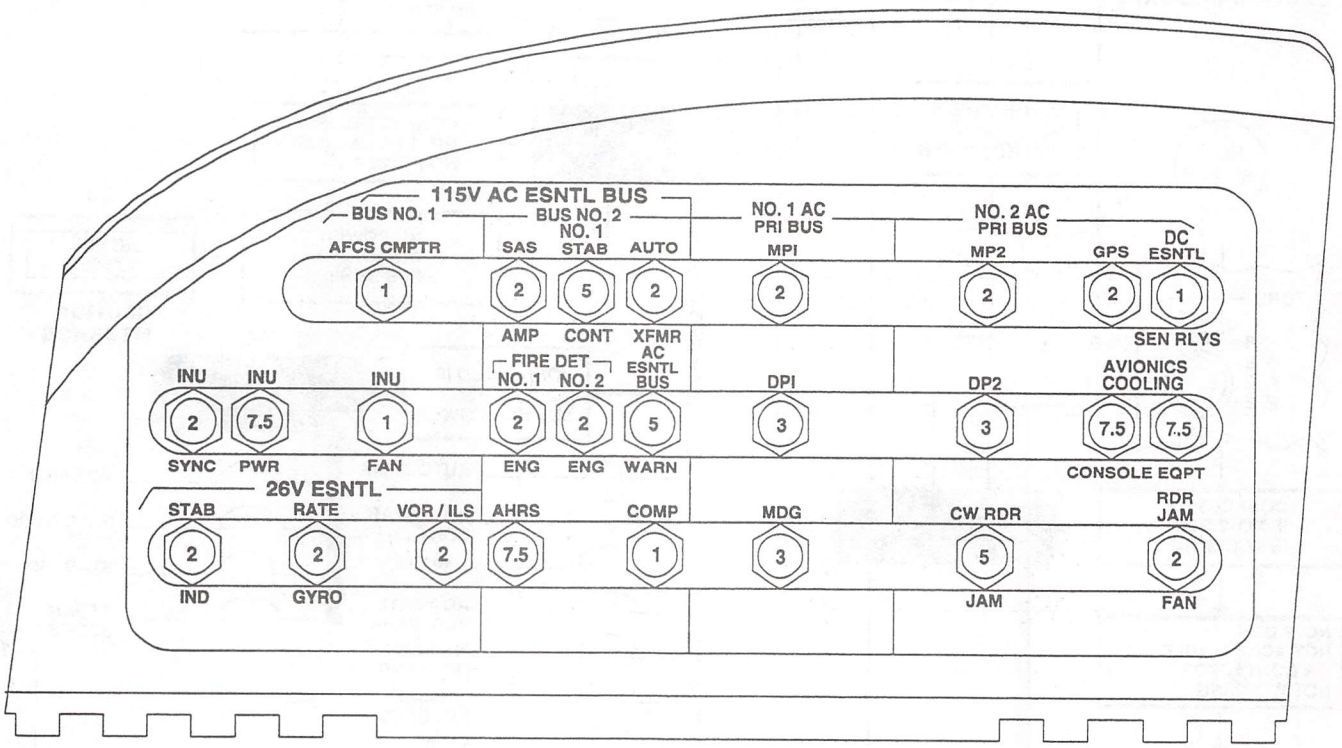

COPILOT'S AUXILIARY CIRCUIT BREAKER PANEL

AK0023_3
SA

Figure 2-25. DC and AC Circuit Breaker Panels (Sheet 3 of 3)

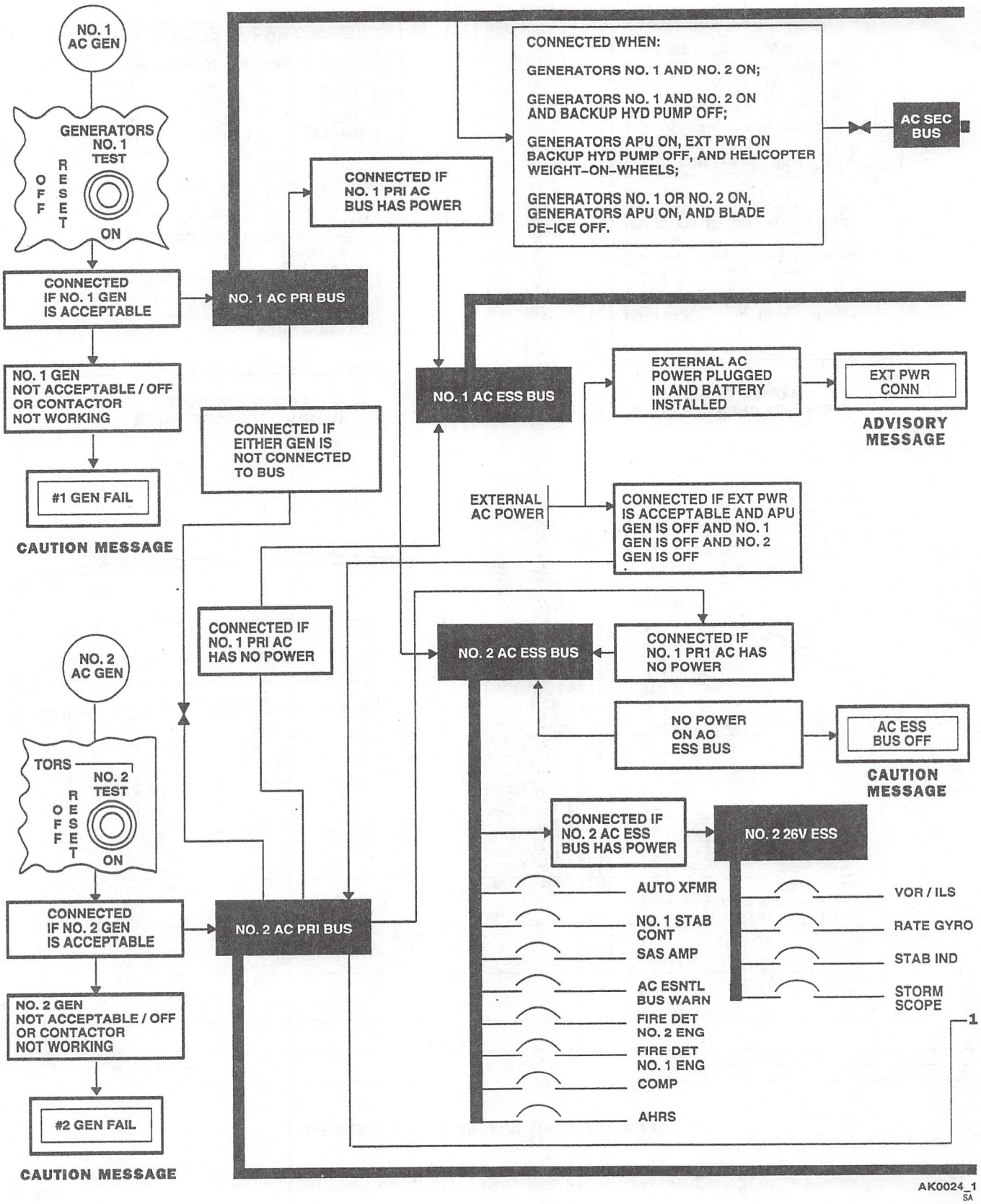

Figure 2-26. AC Power System - General Block Diagram (Sheet 1 of 3)

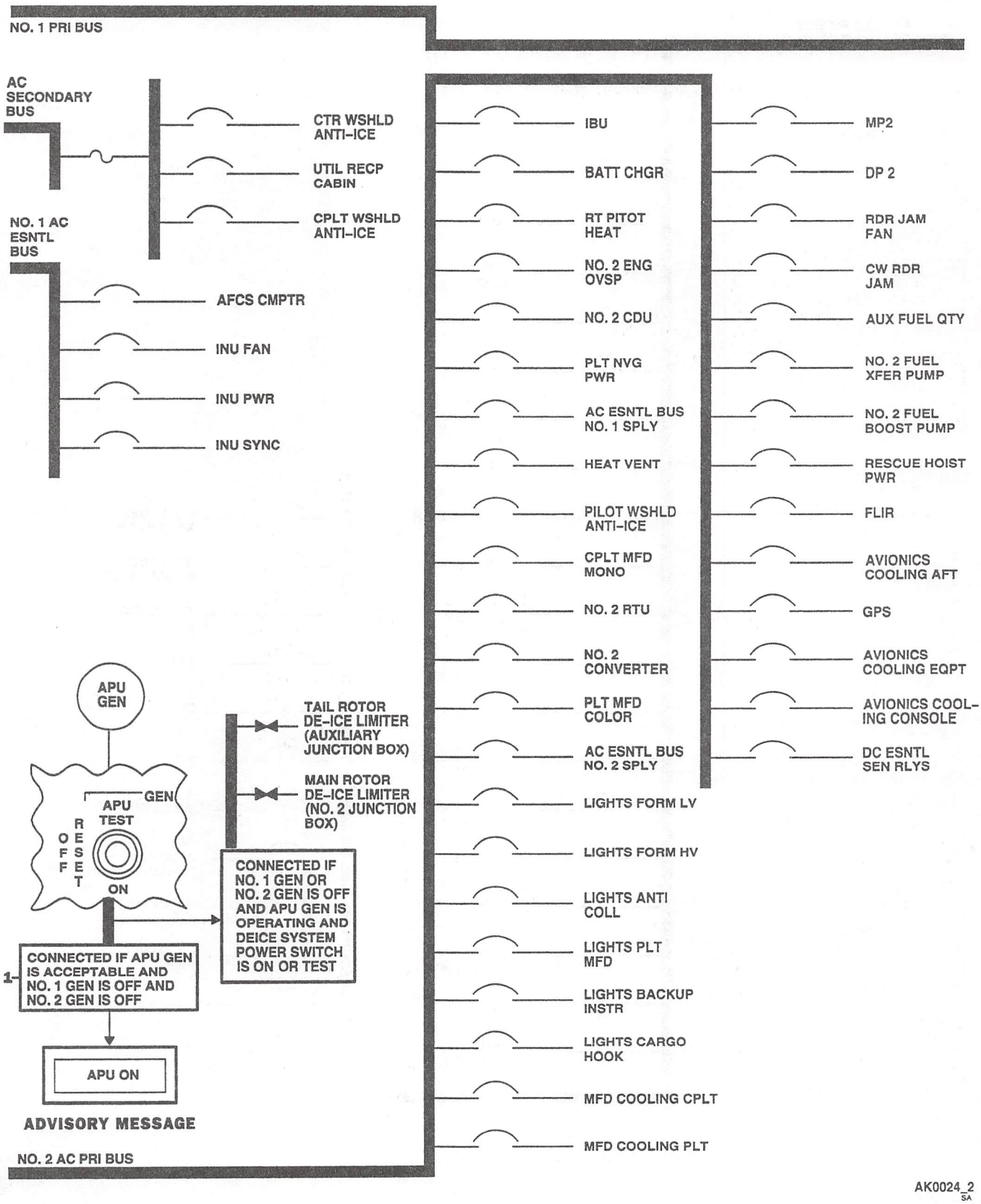

Figure 2-26. AC Power System - General Block Diagram (Sheet 2 of 3)

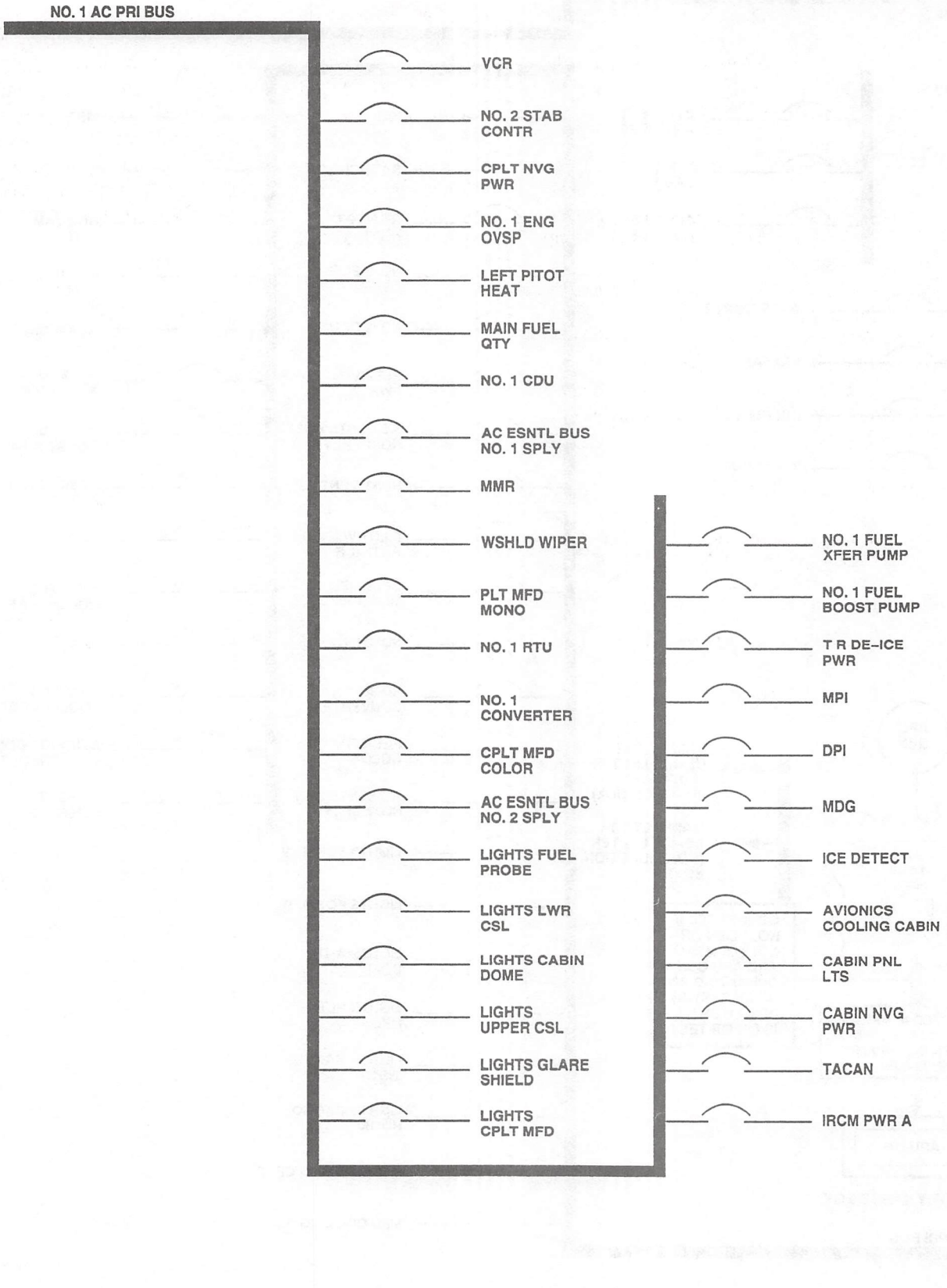

Figure 2-26. AC Power System - General Block Diagram (Sheet 3 of 3)

is marked TEST, OFF RESET, and ON. An APU ON advisory message on the MFDs and the ON light under the APU switch will go on when ac power is supplied and the APU generator switch is in the ON position, and the APU generator is operating. An APU ON advisory light on the upper console will be on anytime the APU is on.

2-185. Generator Control Switches.

Each generator is controlled by a three-position generator switch on the upper console (Figure 2-6). The switch ON position energizes the generator and permits connection of generator ac output to the ac loads. The switch TEST position permits testing of the generator ac output without connecting to the generator loads. The switch OFF RESET position de-energizes the generator and permits generator recycling if the generator is disabled and disconnected from its loads. The control switch is manually placed to OFF RESET and then back to ON.

2-186. External AC Power System.

CAUTION

Do not connect a source of dc power to the external ac connector.

An external ac power connector, on the right side of the helicopter (Figure 2-1), accepts ground source of 115 vac, three-phase, 400 Hz power. The system is controlled by a switch on the upper console (Figure 2-6) marked EXT PWR, RESET, OFF, and ON. External power will be introduced into the system if acceptable external power (proper phase rotation, frequency, and voltage) is connected, EXT PWR power switch is ON, and no other generating source is operating. An EXT PWR CONN advisory message on the MFDs will go on when external power is connected to the helicopter.

Section XII AUXILIARY POWER UNIT

2-187. Auxiliary Power Unit (APU) System.

NOTE

When an APU failure occurs, the BITE indicators for the APU ESU must be checked before attemping an APU restart.

Before attempting an APU restart, shut off APU CONTR switch before BATT switch. If not, an internal latch failure will not allow a restart and BITE indicators will be black (which indicates a reset or ready for service condition).

The APU system (Figure 2-27) consists of an APU, accessories, controls, a monitoring system, and a starting system. The APU system provides pneumatic power for main engine starting and cabin heating, and electrical power for ground and emergency in-flight electrical operations. APU system accessories include a prime/boost pump, hydraulic accumulator, hydraulic handpump, hydraulic start motor, and ac generator. The hydraulic accumulators and handpump, in the aft mid-section cabin ceiling (Figure 2-5), provide the hydraulic pressure for driving the APU starter. If the APU does not start, the hydraulic accumulator can be recharged by pumping the hydraulic handpump. The hydraulic utility module and backup pump, on the left forward deck within the main rotor pylon, will automatically recharge the depleted hydraulic accumulator for the next APU start. The APU controls are in the cockpit on the upper console. Cockpit monitoring of the APU is provided by caution/advisory messages on the MFDs and the upper console APU lights (APU FAIL, TEMP HI, and ACCUM LO). An indicator panel in the cabin monitors APU faults and will indicate reason for APU shutdown on BITE indicators (Figure 2-5). BITE indicators are incorporated in the APU electronic sequence unit (ESU). The start sequence indicators illuminate during the start cycle and do not relate to any shutdown fault. Fifteen of the sixteen operation indicators provide distinct reasons for APU shutdown. Indicators can be monitored during APU operation without interrupting normal operating systems. Upon actuation of the APU CONTR switch, a 1 to 3-second delay will be encountered before the start sequence is initiated. This is due to the fact that the ESU performs a test on all line replaceable units (LRUs) on the APU. The start delay should not be misinterpreted as an intermittent start condition. In addition, if an LRU is found to be inoperable during the pre-start test, the APU will not allow the hydraulic accumulator to actuate and initiate a start attempt. During a start, the ESU compares input signals from speed, time, and temperature sensors on the APU to specified values stowed in the ESU memory, and performs functional steps as a result of the comparison. The system also provides for APU protective shutdown in case of turbine overspeed, underspeed, high exhaust temperature, low oil pressure, or loss of electrical power or sequence failure. Each major sequence step will have a visual indication of go/no-go. During operation major predetermined parameters, exhaust temperature, turbine speed and oil pressure are sampled at least every 50 milliseconds. If any one of the predetermined values are exceeded, the APU will shut down, and appropriate BITE indication is made. If a momentary malfunction occurs (i.e., a power interruption other than switching of the APU CONTR switch), the APU will shut down and the APU CONTR switch must be moved to OFF and then ON, to regain the APU. There is also a go/no-go output signal to the RTUs to turn on the APU ON advisory message when the APU is operating. Power to the APU and ESU is provided from the BATT and BATT UTIL BUS through circuit breakers marked APU CONTR INST on the lower center console.

2-188. APU.

The APU (GTCP36-150) consists of a gas turbine shaft power section, a reduction gear drive, and appropriate controls and accessories (Figure 2-27). The accessory gear box provides an axial pad output drive for the APU ac generator, rpm pad for mounting the APU start motor, and rpm drive pad for the APU fuel assembly. A magnetic pickup mounted on the accessory gear box senses engine speed. The APU is lubricated by a self-contained oil system.

2-189. APU Controls.

CAUTION

Inadvertently moving the BATT from OFF to ON and back to OFF during APU coastdown may possibly cause the APU to attempt restart, resulting in an overtemperature or overspeed shutdown.

The APU controls on the upper console (Figure 2-6) consists of a CONTR switch and an APU fire extinguisher T-handle switch. An APU CONTR switch, marked OFF and ON (lighted ON position), controls the operation of the APU. Placing the switch to the ON position, starts the APU and allows it to operate. The APU is off when the switch is OFF. APU FAIL caution light (upper console) will be on

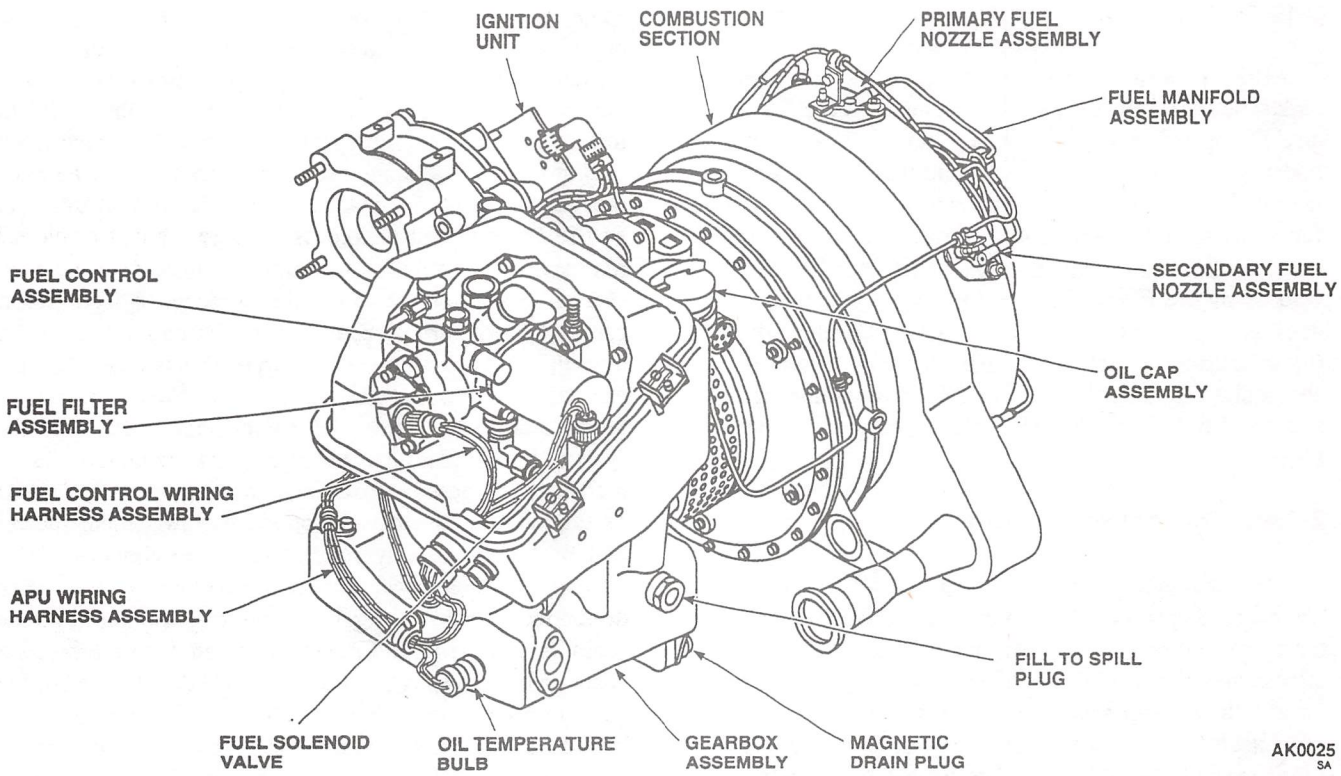

Figure 2-27. Auxiliary Power Unit (APU)

any time the APU automatically shuts down. The APU TEMP HI light and APU OIL HOT caution message will be on when the APU oil temperature is above normal range. During ground operation at high ambient temperatures the APU TEMP HI light and APU OIL HOT caution message may go on. If this occurs, the APU should be shut down immediately to prevent damage. After a 30-minute cooling period, the oil level should be checked. If OK, the APU may be restarted. The control system receives electrical power from the BATT BUS through the circuit breaker marked APU CONTR INST on the lower console. When illuminated, the APU T-handle warns the pilot/copilot of a fire in the APU compartment. When the T-handle is pulled, it turns off fuel to the APU, sends a stop signal to the ESU, arms the fire extinguisher system, and sets the extinguisher direction control valve to the APU. During APU starts using battery power and the fire extinguisher system is required, FIRE EXTGH RESERVE switch must be used. The T-handle microswitch receives electrical power from the BATT BUS through a circuit breaker marked APU FIRE DETR on the lower console circuit breaker panel.

2-190. APU Fuel System.

The fuel control system includes a fuel pump and metering section. The fuel pump is protected by an integral inlet filter. Fuel pump output flow passes through a filter screen before entering the metering assembly. Fuel pump discharge pressure is limited by an ultimate relief valve which, when activated, bypasses fuel flow back to the pump inlet. Fuel metering is accomplished by the torque motor metering valve as a function of an electrical signal from the ESU. For accurate fuel metering, a constant pressure drop across the metering valve in maintained by the differential pressure regulating valve. The fuel solenoid valve is energized by the ESU following the initiation of APU start. This allows fuel to flow to the engine. The fuel control assembly subsequently provides fuel according to a preprogrammed schedule to effect efficient acceleration. The fuel solenoid valve will close completely without visible leakage from the minimum operating fuel pressure to 110% of the maximum operating fuel pressure.

2-191. APU Fuel Supply System.

APU fuel is supplied to the APU from the left main fuel tank. The FUEL PUMP switch must be at APU BOOST for all APU operation, except engine priming. The APU prime/boost shutoff valve is a two-position, open-closed unit mounted on the APU compartment firewall where it also functions as a firewall shutoff valve. The valve is pilot-operated from the upper console FUEL PUMP switch as well as by the FIRE EXTGH APU T-handle. If the APU does not start and the APU ACCUM LO advisory light (upper console) is not on, the manual override lever on the accumulator manifold should be pulled to attempt another start, and held until the APU has reached self-sustaining speed.

2-192. Accumulator Recharge.

The accumulator recharge cycle starts when the APU has reached operational speed and the APU-driven generator comes on the line. The pressure switch for the accumulator causes the APU ACCUM LO light and message to go on and the backup system pump to develop pressure. The APU accumulator pressure should be at least 2800 psi before attempting an APU start. The accumulator is recharged from the backup pump which runs for 90 seconds after the accumulator low-pressure switch is actuated. When the winterization kit is installed, an additional identical accumulator is installed in parallel with the original accumulator. Discharge and recharge of the added accumulator is the same, except a 180-second recharge cycle for the two accumulators will take place when the accumulator pressure switch senses low accumulator pressure. Both accumulators are charged or discharged simultaneously. If the accumulators do not fully charge during the first 180 seconds of the backup pump operating cycle, the pump will continue to operate in 180-second segments, or until the BACKUP PUMP PWR circuit breaker is pulled, or 115 vac power is removed. The backup system pump shuts down after recharge, unless required for other purposes. Should the accumulator pressure drop, the backup system pump restarts to replenish the accumulator charge. The rate of accumulator charge is limited to protect the backup system from possible depletion due to ballistic damage to the APU start system. Should the APU not start, the accumulator may be recharged by these methods, after placing the APU CONTR switch to OFF. An electric ground cart powering the backup hydraulic pump or a hydraulic ground cart connected to the backup hydraulic system through the ground test quick-disconnects or by using the handpump in the aft upper cabin. The APU CONTR switch should not be turned ON again or the BATT switch turned OFF until the ESU BITE indicators have been checked. The handpump may also be used to top off the accumulator charge if the charge has dropped due to a low temperature condition. A pressure gage mounted slightly aft of the handpump on the cabin ceiling near the left cabin door indicates the accumulator charge level (Figure 2-5). Check valves prevent draining of the accumulator charge through the system.

Section XIII LIGHTING

2-193. Interior Lighting.

The interior lighting system consists of cockpit flood lights, utility lights, and cabin dome lights (Figure 2-5). The lighting system gives the pilot a choice of selecting either white or NVG compatible blue-green lighting for the cockpit dome lights, instrument panel glare shield lights, utility lights, and cabin dome lights.

2-194. Night Vision Goggles (NVG) Lighting System.

The NVG compatible lighting system provides interior NVG compatible, blue-green lighting. Exterior lighting provides cargo hook well area electro-luminescent lighting, infrared formation lighting, and attachable/detachable controllable searchlight filtered lighting. A dimming feature is incorporated in the searchlight system to provide dimming through a switch on the collective marked SRCH LT, BRT DIM. The position and formation lights have IR emitters installed within close proximity to the regular installed lights to enhance outside viewing with night vision goggles.

2-195. Cockpit Floodlights and Glare Shield Lighting.

Cockpit floodlights are controlled by a switch marked BLUE, OFF, and WHITE (Figure 2-6). Power is supplied by the dc essential bus through a circuit breaker marked LIGHTS SEC PNL on the upper console circuit breaker panel. Two lights installed in the instrument panel glare shield provide secondary lighting for the instrument panel. The lights are mechanically dimmed by a control on the upper console labeled GLARESHIELDS with marked positions, OFF and BRT. Power to the glare shield lights is provided from the No.1 ac primary bus through a circuit breaker marked LIGHTS GLARE SHIELD.

2-196. Flight Instrument Lights.

Instrument lights are controlled by three rotary controls (INST LTS CPLT MFD, INST LT BACKUP, and INST LT PILOT MFD). The primary flight instrument lights are divided into pilot and copilot groups. These lights are controlled by individual rotary intensity controls marked: INST LTS CPLT MFD, OFF and BRT; and INST LT PILOT MFD, OFF and BRT. The backup instrument lights operate in the same manner as the primary flight instrument lights. The intensity of the instruments lights is controlled by a rotary control marked INST LT BACKUP, OFF and BRT. Lighting of the instruments is provided by instrument bezels with blue-green lights. The radar altimeter and master warning panel lights incorporate dimming controls on the instrument panel marked RAD ALT DIMMING and MA WARN DIMMING. The aviator night vision imaging system (ANVIS) has an ANVIS DISPLAY SYMBOLOGY panel located on the lower center console for adjusting the illumination intensity of the flight symbology data that is displayed on the pilots helmet sight reticles. The MFDs instrument display system has NVG compatible information lighting. Power to the instrument lights is provided by the No.2 ac primary bus through circuit breakers marked LIGHTS PLT MFD and LIGHT BACKUP INSTR, and the No.1 ac primary bus through a circuit breaker marked LIGHTS CPLT MFD. These circuit breakers are located on the pilot's and copilot's circuit breaker panel, respectively.

2-197. Lighted Switches Dimmer.

A dimmer control labeled LIGHTED SWITCHES (Figure 2-6) is provided on the upper console to reduce illumination level of the following panels lighted switches: pilot and copilot AUX ICS panels, MISC SW panel, AFCS CONTROL panel, STABILATOR panel, FUEL BOOST PUMP CONTROL panel, FUEL MGT panel, ZEROIZE/EMERGENCY panel, and HOVER TRIM CONTROL panel.

2-198. Master Warning Panel Bright/Dim Test Switch.

WARNING

When operating in the NVG mode, if ac power is lost for more than 7 seconds, the MASTER CAUTION PRESS TO RESET lights will default to full bright when power is restored.

A switch marked LTS INDICATOR (Figure 2-6) on the upper console allow the pilots to test and adjust intensity of the master warning panel lights. Placing the switch to TEST will illuminate all indicator lights on the master warning panels. Placing the switch to BRT/DIM will allow the MA WARN DIMMING controls on the instrument panel to adjust the illumination level of the respective master warning panel. The switch is placed to NORM for normal operation.

2-199. Upper and Lower Console Lights.

Lighting of the upper and lower consoles is controlled by dimmer controls marked CONSOLE LT, UPPER and LOWER, located on the upper console. These controls adjust the illumination level of the panels excluding lighted

switches. Power to the dimmers is provided by the No.1 ac primary bus through circuit breakers marked LIGHTS UPPER CSL and LIGHTS LWR CSL on the copilot's circuit breaker panel. All other lower console panels are illuminated by the lower console auxiliary utility light next to the copilot's seat.

2-200. Utility Lights.

All utility lights are capable of illuminating blue-green or white light. An auxiliary utility light located at the left rear of the pilot's seat is used to illuminate some panels on the lower console for night flight. Make certain cockpit utility lights are off when not in use. Power to the cockpit utility lights is provided by the dc essential bus through a circuit breaker marked LIGHTS UTIL CKPT.

2-201. Cabin Dome Lights.

Dome lights are provided for the cabin (Figure 2-5). A rotary switch is located on the HOVER TRIM CONTROL panel in the cabin marked DOME LIGHTS that turns on the dome lights and adjust their intensity. Power to the cabin dome light system is provided by the No.1 ac primary bus through a circuit breaker marked LIGHTS CABIN DOME.

2-202. Maintenance Light.

A portable 20-watt floodlight in the cabin is used for maintenance work. The light has a 20-foot cord that allows use within the cabin and around the main transmission. A switch on the rear end of the light with marked position DIM, OFF, and BRIGHT controls the light intensity. Another maintenance light receptacle in the aft tail cone allows the light to be used around the tail section. The maintenance light is stowed in a bag at the back of the pilot's seat. Power to the maintenance light receptacles is provided by the dc essential bus through a circuit breaker marked LIGHTS UTIL CKPT.

2-203. Exterior Lights.

2-204. Searchlight.

The searchlight (Figure 2-1) is mounted on the right bottom of the nose section and is controlled from either collective pitch stick; however, the pilot can override the copilot. The copilot's SRCH LT switch is able to control the searchlight only if the pilot's SRCH LT switch is not currently being used. The 450 watt light can be moved forward through a 120° arc from the stow position. It can also be turned 360° in either a right or left direction on its axis. The light is operated by a four position searchlight control switch (Figure 2-15). Directional control of the light is provided by pressing the switch toward EXT (extend), RETR (retract), L (left), and R (right). When the switch is pressed ON, the lamp will go on and arm the directional control switch. The SEARCH LIGHT ON advisory message will illuminate on the MFDs when the searchlight is turn on. Placing the control switch to EXT causes the light beam to move forward at a rate of about 12° per second. If the switch is placed to RETR, the light will retract at a rate of about 30° per second to the stowed position in the searchlight well. Refer to Chapter 5 for extend/retract limitations. When the light is fully retracted, the light is automatically turned off. An infrared filter can be installed on the controllable searchlight to enhance viewing objects outside the helicopter when wearing the night vision goggles. With the IR filter installed, maximum wattage lamp to be used is 250 watt. An OUTPUT switch on the searchlight dimmer under the copilot's seat, is placed at NORM when dimming feature on searchlight is desired. When in BYPASS position, the searchlight can not be dimmed. The IR filter shall not be used with a 450 watt lamp installed. The dimming feature of the controllable searchlight provides a variable light level from 250 to 0 watts to the pilot and copilot through a switch on each collective grip marked SRCH LT, BRT DIM to controls power to the light. When the light is on, the BRT DIM switch may be moved to select the desired light level. When the desired level is reached, the switch is released to the center position. Power to light and control the searchlight is provided by the No.1 dc primary and dc essential bus through circuit breakers marked CONT SRCH CONTR and CONT SRCH PWR on the copilot and upper console circuit breaker panels, respectively.

2-205. Hoist Searchlight.

A second searchlight has been added to the helicopter that is controlled by the hoist operator to illuminate areas directly beneath the helicopter. It is mounted on the bottom of the helicopter in front of the cargo hook in line with the externally-mounted hoist. The hoist operator will be able to control the hoist searchlight with the SCH LT switch on the crew hover grip. Pressing the SCH LT switch will turn the hoist searchlight on or off. An NVG compatable light, labeled SEARCH LIGHT POWER, is located adjacent to the crew hover grip to indicate power is applied. When the hoist searchlight is powered on, moving the SCH LT switch (forward, rearward, left, or right) will cause the hoist searchlight to move or turn at 12° per second. The 450 watt light can be moved forward through a 120° arc from the stow position. It can also be turned 360° in either a right or left direction on its axis. An infrared filter can be installed on the hoist searchlight to enhance viewing objects outside the helicopter when wearing the night vision goggles. With

the IR filter installed, maximum wattage lamp to be used is 250 watt. The DIM/BRT switch on the crew hover grip enables the hoist operator to vary the intensity of the hoist searchlight.

2-206. Landing Light.

One 600-watt landing light is mounted on the left side beneath the nose section and is controlled from both collective pitch stick grips (Figure 2-15). The light can be extended 107° from the stowed position. A dual function switch is used to operate the light. Depressing the LDG LT switch turn on or off the light and pressing the switch toward EXT and RET controls light position. When the light is on, the LANDING LIGHT ON advisory message appear on the MFDs. When the switch is at the EXT position, the light will continue to extend until reaching its limit and power is removed. When the switch is held at RET the light retracts to the stowed position. When the light reaches its stowed position, power is automatically removed from the motor. When the LDG LT switch, PUSH ON/OFF is pushed OFF, the lamp and LANDING LIGHT ON advisory message will go off. Refer to Chapter 5 for extend/retract limitations. During extension, the travel speed is about 12° per second, and during retract, about 30° per second. Power to light and control the landing light is provided by the No.1 dc primary bus through circuit breakers marked LIGHTS RETR CONTR and LDG PWR on the copilot's circuit breaker panel.

2-207. Anticollision Lights.

WARNING

White strobe lights may cause a safety hazard on the ground where other flight crews and ground personnel may be affected by the brilliance and pulse of the light. In such cases the white light should not be on until the aircraft is ready for take off.

This light system contains four strobes in two separate units, one beneath the aft fuselage and one on top of the aft pylon section (Figure 2-1). The lights are controlled by two switches on the upper console (Figure 2-6) labeled ANTI COLLISION LIGHTS, UPPER, BOTH, LOWER and DAY, OFF, NIGHT. The system consists of a dual power supply and two interchangeable day/night anticollision lights. The dual supply system provides separate outputs for the aft fuselage light and the pylon mounted light. Each anticollision light assembly contains two lamps, the upper lamp within a red lens for night operation and the lower within a clear lens for day operation. Proper operation is selected by placing the switch to DAY or NIGHT. The desired strobe(s) is selected by placing the switch to UPPER, LOWER, or BOTH. If at BOTH, the lower fuselage and the aft pylon lights will alternately flash 60 to 80 flashes per minute. If the selector switch is placed to UPPER or LOWER, that light will flash at 30 to 40 flashes per minute. To discontinue operation of the anticollision light(s), the DAY NIGHT switch is placed to OFF. Power to the anticollision light system is provided from the No.2 ac primary bus through a circuit breaker marked LIGHTS ANTI COLL.

2-208. Position Lights.

NOTE

Visibility of the landing gear support position lights is partially blocked in the forward quadrant by the AN/AAR-47 antennas.

Position lights (Figure 2-1) are outboard of the left and right landing gear support and top tail pylon. The lights are red on the left, green on the right, and white on the tail. Control of the position lights is through the upper console panel containing two switches marked POSITION LIGHTS, DIM, OFF, BRT, and STEADY, FLASH. When the intensity switch is placed to DIM or BRT, all three lights go on at once. If the STEADY FLASH switch is placed to FLASH, the three lights will flash. The STEADY position causes the lights to remain on continuously. Infrared position lights are installed within close proximity of the standard position lights. Both standard and IR position lights are installed on the external tank supports (ETS) outer edges. When NVG operations are required, IR lights may be used to enhance viewing outside the helicopter. IR lights are selected through a toggle switch on the upper console (Figure 2-6) marked NAV LTS, NORM and IR. Position lights are to be selected through a switch marked POSITION LIGHTS, DIM, OFF, or BRT, and mode of operation through a switch marked STEADY or FLASH. Power to the position lights is provided by the No.2 dc primary bus through a circuit breaker marked LIGHTS POS. Power to the IR lights is provided by the No.2 dc primary bus through a circuit breaker marked LIGHTS IR. Both circuit breakers are located on the pilot's circuit breaker panel.

2-209. Formation Lights.

These lights (Figure 2-1) are on top of the main pylon cowling, tail drive shaft cover, and horizontal stabilator. The system consists of four green electro-luminescent lights. The lights are controlled by a single rotary selector switch marked FORMATION LT, with marked positions

OFF and 1 through 5. Position 5 is the brightest. This switch shares operation with the IR position lights when operating in a NVG environment. Dimming of the IR lights is done with the FORMATION LT control, as used with the electro-luminescent formation lights. Selection of position 1 through 4 causes the IR formation lights to illuminate at the same intensity. Position 5 causes the lights to illuminate brighter. Power to the formation lights is provided by the No.2 ac primary bus through two circuit breakers marked LIGHTS FORM, LV and HV.

2-210. Refueling Probe Light

The nose mounted refueling probe light (Figure 2-1) provides lighting of the probe during aerial refueling. The probe light (40 watt bulb) is controlled by a variable potentiometer on the FUEL MGT panel marked PROBE LIGHT which varies between OFF and BRT. The probe light is turned on by moving the PROBE LIGHT potentiometer from OFF and the intensity of the of the light is increased as the potentiometer is moved toward BRT. An IR filter lens cap can be used during NVG operations. The light receives power from the No.1 ac primary bus through a circuit breaker marked LIGHTS FUEL PROBE.

2-211. Cargo Hook Light.

An electro-luminescent light is installed over the cargo hook to aid external load operations at night. This light is controlled by a switch on the upper console marked CARGO HOOK LT. Power to the cargo light is provided from the No.2 ac primary bus through a circuit breaker marked LIGHTS CARGO HOOK on the pilot's circuit breaker panel.

Section XIV FLIGHT INSTRUMENTS

2-212. Pitot-Static System.

Electrically-heated Pitot tubes with static ports are mounted on the canopy aft and above the pilot and copilot cockpit doors. There are two static ports on each probe and they are cross coupled right-to-left and left-to-right; however, the Pitots act independently. The Pitot-static tube on the right provides pressure data to the barometric altimeter and the airspeed indicator on the instrument panel, and the Pitot-static tube on the left provides pressure data to the air data computer. In addition, the right and left Pitot-static tubes provide pressure data respectively to the air data and airspeed transducers which operate the stabilator, autopilot, and pitch bias actuator. Refer to Section IX for Pitot tube heater system.

2-213. Backup Attitude Indicator.

NOTE

BAI should remain in the caged position until converters are on-line.

During shipboard operations, the BAI should be uncaged after takeoff and the aircraft is within 4.25 degrees of vertical and lateral accelerations are less than 0.074 g. Under the noted conditions, the BAI should fully align within 2 minutes; otherwise, the BAI may not fully align if uncaged outside of these parameters.

A backup attitude indicator (BAI) is installed on the instrument panel to indicate helicopter pitch and roll attitudes (Figure 2-8 and 2-28). The BAI has a self contained attitude gyro which provides pitch and roll data for the sphere. It also indicates turn rate and slip information. A warning flag may be visible for about 1 minute after ac power has been applied to the circuit while the gyro is coming up to speed. Power to the BAI is provided by the dc essential bus through a circuit breaker marked BAI on the upper console circuit breaker panel. The function of each control/indicator is as follows:

CONTROL/ INDICATOR	FUNCTION
Sphere	Represents the visual horizon as seen outside of the aircraft and simulates aircraft pitch and roll changes.

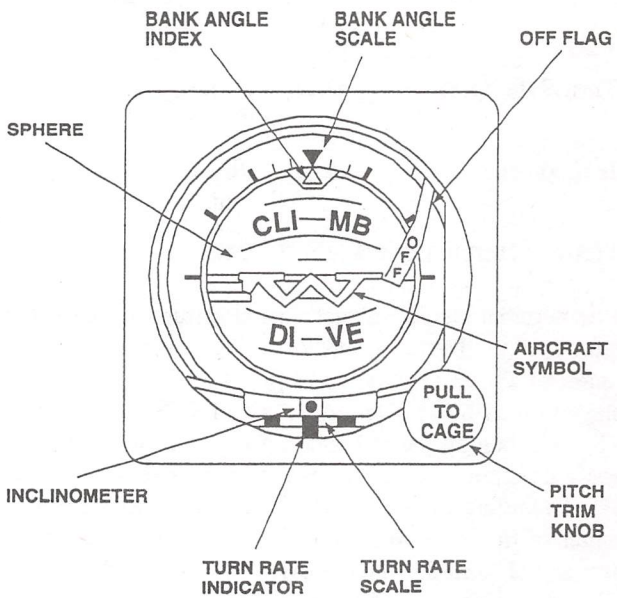

Figure 2-28. Backup Attitude Indicator

CONTROL/ INDICATOR	FUNCTION
Bank Angle Index	Pointer for bank angle scale to indicate aircraft angle of bank.
Bank Angle Scale	Indicates aircraft angle of bank (thin marks are 10° apart, thick marks are 30° apart).
OFF Flag	Indicates unreliable pitch and roll inputs or the BAI is inoperative.
Aircraft Symbol	Indicates aircraft present position in reference to other BAI indications.
Pitch Trim Knob	Rotating the knob counter clockwise or clockwise will move the lever position on the sphere 10° above or 10° below aircraft symbol. Pulling and rotating the knob clockwise will lock the gyro in the caged position.

CONTROL/ INDICATOR	FUNCTION
Turn Rate Scale	Indicates aircraft rate of turn (4 minute turn - 1 pointer width either side of center; 2 minute turn - 2 pointers width either side of center).
Turn Rate Pointer	Indicator for turn rate scale to indicate aircraft turn rate.
Inclinometer	Indicates direction of slip or skid (centered indicates balance flight).

2-214. Turn Rate Indicating System.

A 4-minute and 2-minute turn rate (turn and slip) indicator is at the bottom center of the BAI and at the bottom center of a vertical situation display (VSD) page when displayed on an MFD (Figures 2-28 and 3-53). The BAI and VSD symbology pages contain a moving turn rate needle and a fixed turn rate scale for indicating rate and direction of turn. During straight flight the needle is positioned at the center of the scale. When the helicopter turns, the rate-of-turn signal from the INU or AHRS is indicated by the direction in which the turn indicator moves on a VSD page. Turn rate signals to the BAI is provided by the AFCS yaw rate gyroscope. Amount of deflection is proportional to the rate-of-turn. A one-needle width deflection from center represents a turn of 1.5° per second (4-minute turn) and a two-needle width deflection represents a turn of 3° per second (2-minute turn). The BAI turn rate indication and VSD pages also contain a slip indicator that shows uncoordinated turns. Power to the rate gyro system and BAI is provided by the No.2 26V ac essential and 115V ac essential buses through circuit breakers marked RATE GYRO and SAS AMP on the copilot's auxiliary circuit breaker panel.

2-215. Airspeed Indicator.

The airspeed indicator (Figure 2-8 and 5-1) is installed on the instrument panel is a differential pressure instrument that measures the difference between impact pressure and static pressure. System error is noted on two placards below the instrument panel on each side of the lower console. Instrument range markings and limitations are contained in Chapter 5, Section II, System Limits.

2-216. Magnetic Heading Indicator.

The magnetic heading indicator (MHI) is mounted in the lower center section of the instrument panel (Figure 2-8 and 2-29). The instrument consists of a fixed outer dial and an inner rotating compass card. The compass card is slaved to the AHRS magnetic heading synchro output. The OFF

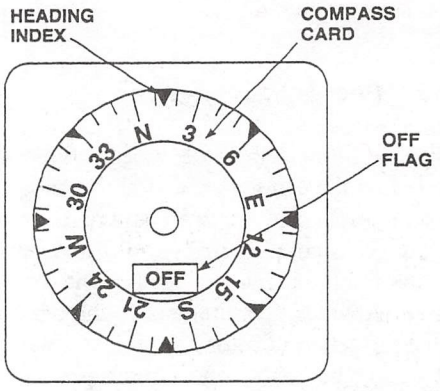

AK0027
SA

Figure 2-29. Magnetic Heading Indicator (MHI)

flag will appear when the compass card heading information is unreliable. Power to the MHI is provided by the No.2 ac essential bus through a circuit breaker marked COMP on the copilot's auxiliary circuit breaker panel. The following indicators are located on the MHI:

INDICATOR	FUNCTION
Compass Card	Indicates aircraft magnetic heading. Number under heading index represents the magnetic heading in which the nose of the aircraft is pointing.
Heading Index	Pointer for compass card to identify the aircraft's magnetic heading.
OFF Flag	Magnetic heading indicator is unreliable or inoperative.

2-217. Altimeter/Encoder AAU-32A.

The altimeter is installed on the instrument panel (Figures 2-8 and 2-30). The altimeter encoder functions as a barometric altimeter for the pilots and a backup barometric altitude sensor for the AN/APX-100 transponder in mode C. The system is equipped with a continuously operating vibrator to improve altitude measuring accuracy. The operating range of the altimeter is from -1000 feet to 50,000 feet. The face of the instrument has a marked scale from zero to nine in 50-foot units. The operating indicators and controls are a 100-foot pointer, 100-foot drum, 1,000-foot drum, 10,000-foot drum, barometric pressure set knob, barometric pressure scale window and warning flag. The warning flag is only used in conjunction with the encoder. A counter window next to the sweep hand contains the three digital drums that rotate to indicate the altitude of the

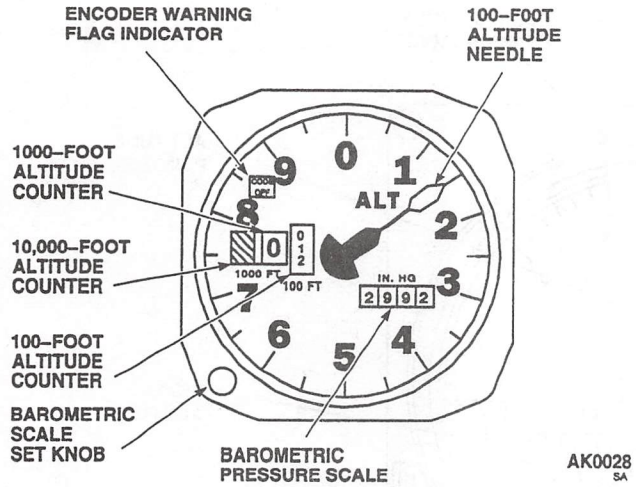

Figure 2-30. Barometric Altimeter Encoder

helicopter. Another window in the upper left section of the instrument face indicates the normal code operation. When the system fails to transmit signals to the transponder, a flag marked CODE OFF will appear in the window. A window on the lower right section of the instrument face indicates barometric pressure setting. The barometric pressure set knob is on the lower left corner of the indicator bezel. Power to the encoder system is provided by the No.1 dc primary bus through a circuit breaker marked BARO ALT. Maximum allowable altimeter error is 70 feet.

2-218. Radar Altimeter Set.

CAUTION

The PUSH-TO-TEST function on the radar altimeter is not inhibited while in flight. Pressing the PUSH-TO-TEST knob when radar altitude hold is active will deactivate radar altitude hold and engaged barometric altitude hold.

The radar altimeter system, AN/APN-209(D), provides instantaneous indication of actual terrain clearance height. Altitude is displayed on the radar altimeter indicator and by the MFDs when altitude information has been selected for the declutter mode in use (Figure 2-31 and 3-57). The radar altimeter indicator has an altitude pointer that indicates altitude on a linear scale from 0 to 200 feet (10 feet per unit) and a second-linear scale from 200 to 1500 feet (100 feet per unit). In addition, a digital readout is provided for a more accuracy altitude reading on the radar altimeter indicator. The MFDs display a bar scale and a digital readout of radar altimeter information up to 1000 feet when selected as part of the declutter configuration (paragraph 3-112) in use. The radar altimeter is powered on when aircraft power is applied. Rotating the LO SET and HI SET PUSH-TO-TEST control knobs clockwise or counterclockwise permit the pilot to select any desired altitude limit between 0 and 1500 feet, as indicated by the low and high set bugs. Whenever the altitude pointer descend pass the low-altitude set limit, the LO altitude warning light will illuminate. If the aircraft altitude descend below the value entered on page 1 of the CDU default pages, an "ALTITUDE LOW" voice warning message will be heard. In addition, whenever the altitude pointer ascend above the high-altitude set limit, the HI altitude warning light will illuminate. Pressing the PUSH-TO-TEST HI SET control provides a testing feature of the system at any time and altitude. When the PUSH-TO-TEST knob is pressed, the radar altimeter altitude pointer and MFDs bar scale will move between 900 feet and 1100 feet, both digital readout values are between 900 and 1100 feet, and the OFF flag removed from view on the radar altimeter indicates satisfactory system operation. Releasing the PUSH-TO-TEST SET control knob restores the system to normal operation. If the system lose power or become unreliable, the OFF flag will appear and the altitude pointer will go behind the dial mask, to prevent the pilot from obtaining erroneous readings. Flight operations above 1600 feet do not require that the system be turned off. The altitude pointer will go behind the dial mask but the transmitter will continue to operate. Power to operate the AN/APN-209(D) is provided by the No. 2 dc primary through a circuit breaker marked RDR ALTM on the pilot's circuit breaker panel.

2-219. Radar Altimeter Antennas.

Two identical radar altimeter antennas (Figure 3-6) are on the cockpit section under the avionics compartment. One is for the transmitter and the other is for the receiver. The antennas are flush-mounted in the fuselage on the bottom of the helicopter.

2-220. Radar Altimeter Controls and Functions.

Control of the radar altimeter set is provided by the LO SET and HI SET PUSH-TO-TEST knobs on the front of the radar altimeter indicator, page 3 of the equipment status pages, and page 1 of the CDU default pages. Refer to paragraph 3-37 for power on and test activation. The following controls and indications are located on the radar altimeter indicator:

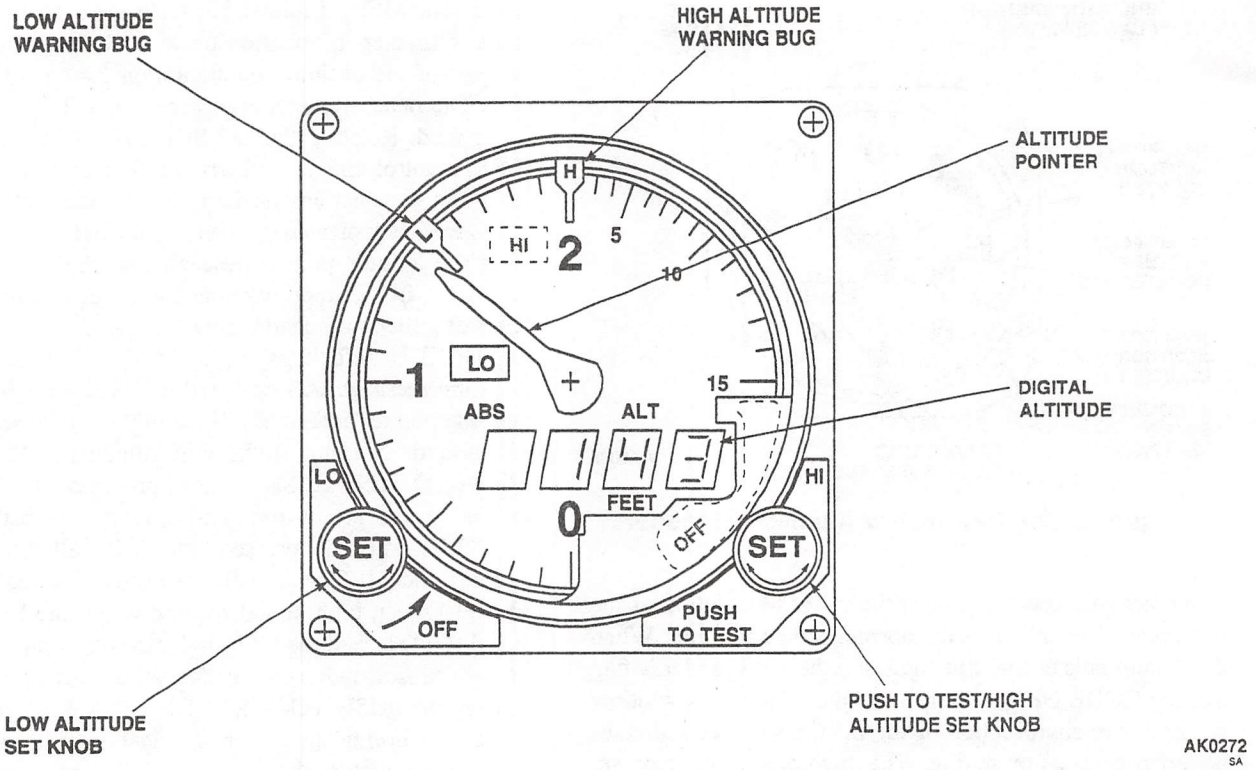

Figure 2-31. Radar Altimeter Set

CONTROL/ INDICATOR	FUNCTION
Low altitude bug	Indicates the trip point of the LO warning light.
High altitude bug	Indicates the trip point of the HI warning light.
LO SET knob	Sets low altitude bug.
HI SET PUSH-TO-TEST knob	Sets high altitude bug and actuates the built-in test function for the radar altimeter.
Altitude pointer	Provides an analog indication of absolute altitude from zero to 1500 feet.
Digital readout	Digit readout of absolute altitude from 0 to 1500 feet.
LO warning light	Illuminates whenever altitude pointer goes below low altitude bug setting.
HI warning light	Illuminates whenever altitude pointer goes above high altitude bug setting.
OFF flag	Moves into view whenever radar altimeter loses power or becomes unreliable.

2-221. Radar Altimeter Operation.

a. Starting Procedure.

(1) Ensure power is turned on via page 3 of the equipment status pages (paragraph 3-37).

(2) LO SET knob - Rotate to set low altitude bug to 80 feet.

(3) HI SET knob - Rotate to set high altitude bug to 800 feet.

(4) Indicator pointer - Behind mask above 1500 feet.

b. Track Operation. After about 5 seconds of warmup, the radar altimeter will go into track mode with these indications:

(1) OFF flag - Not in view.

(2) Altitude pointer - 0 ± 5 feet.

(3) Digital readout - 0 to +3 feet.

(4) LO warning light - illuminated.

(5) HI warning light - off.

c. HI SET knob - Press and hold. The altimeter will indicate a track condition as follows:

(1) OFF flag - Not in view.

(2) Altitude pointer - 1000 ± 100 feet.

(3) Digital readout - 1000 ± 100 feet.

(4) LO warning light - off.

(5) HI warning light - illuminated.

(6) HI SET knob - Release. The altimeter will return to indications in step b, Track Operation.

(7) Reset the low and high set limits as desired.

2-222. Standby Magnetic Compass.

A magnetic compass is installed above the instrument panel on the right center windshield frame (Figure 2-4). The compass is used as a standby instrument for heading references. A compass correction card with deviation errors is installed on the right side of the upper console.

2-223. Free-Air Temperature (FAT) Indicator.

The free-air temperature indicator is a direct reading instrument marked FREE AIR, and reads in degrees Celsius. Two FAT indicators are installed through the overhead windows (Figure 2-4).

2-224. Liquid Crystal Chronometer.

The LC-6NV is a precision, six-digit, five-function aircraft clock/timer with simple three-button operation. The chronometer (clock) is located on the center section of the instrument panel (Figures 2-8 and 2-32). It has a liquid crystal display for readability under bright daylight conditions. Backlighting is provided for night operation. The display operates on 28 volts dc power. Power to the clock is provided by the No.1 dc primary bus through a circuit breaker marked CLOCK on the copilot's circuit breaker panel. The clock contains an internal AAA alkaline battery

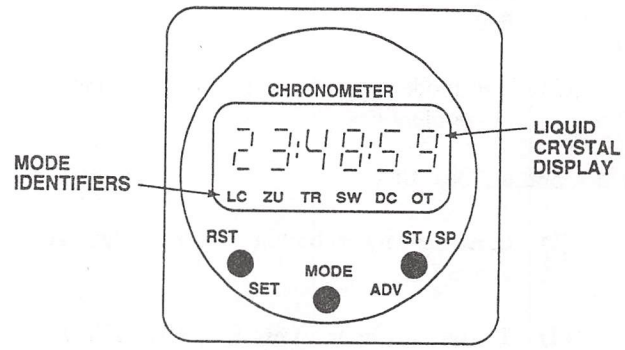

Figure 2-32. Liquid Crystal Chronometer.

to maintain time when aircraft power is off. The internal battery is replaced as needed. The trip/flight timer mode is connected to the right WOW switch. It counts flight time from takeoff to landing and cannot be reset in flight. The following controls and indicators are on the chronometer:

CONTROL/ INDICATOR	FUNCTION
RST	Stopwatch reset.
SET	Time set.
MODE Selector	Selects desired mode of operation.
ADV	Time set advance.
ST/SP	Stopwatch start/stop.
Mode Annunciator	Indicates the current mode of the chronometer.
LC	Local time, 12-hour clock.
ZU	Zulu, Greenwich Mean, or coordinated universal time, 24-hour clock.
TR	Trip or flight timer.
SW	Stopwatch.
DC	Count-down counter.
OT	Reserved for future use.

2-225. Chronometer Operation.

a. Mode selection.

(1) The MODE button is pressed to select the desired operation.

(2) Pressing the MODE button will advance the annunciator until the desired operation is identified.

(3) The mode annunciator is displayed above the mode identifier.

b. Setting local time.

(1) Press the MODE button until the annunciator is above LC.

(2) To set the hour, press the RST SET button once, then press and hold down the ST/SP ADV button until the correct hour is displayed. While holding the ST/SP ADV button, the digits will advance twice pere second for five seconds, then ten times per second.

(3) To set the minutes, press the RST SET button again so that the minutes and seconds are displayed. Always set to the next minute, and count down the seconds from the selected time standard (time/clock reference used to set the chronometer). The digits advance at the same rate as above. The seconds will indicate 00. When the next whole minute is reached, press the RST SET button. The hour and next whole minute is displayed and holding.

(4) When the time reference reaches the time set into the chronometer, press the ST/SP ADV button to start the clock.

c. Setting zulu time.

(1) Press the MODE button until the annunciator is above ZU.

(2) Perform substep (2) of b. above to set the hour.

(3) When the correct hour is displayed, press the RST SET button twice so as not to change the minutes and seconds. The chronometer should return to the full time display.

(4) Press the ST/SP ADV button to start the clock.

d. Trip/Flight timer.

(1) Press the MODE button until the annunciator is above TR.

(2) Press the ST/SP ADV button, verify that the display shows zero.

(3) The trip/flight timer will activate upon takeoff and stop when the helicopter touches down.

(4) The trip/flight timer cannot be reset during flight.

e. Stopwatch.

(1) Press the MODE button until the annunciator is above SW.

(2) Press the ST/SP ADV button to set the time to zero.

(3) Press the ST/SP ADV button once to start the counter.

(4) Press the ST/SP ADV button again to stop the counter.

NOTE

The clock may be used in other modes while the stopwatch function is active. Elapsed time will continue until cleared by pressing the RST SET button in the SW mode.

(5) The ending time will be displayed until the RST SET button is pressed again, which clears the elapsed time.

f. Count-down counter.

(1) Press the MODE button until the annunciator is above DC.

(2) Press the RST SET button twice. Hour display will show zero.

(3) Press and hold the ST/SP ADV button until the desired hour is displayed.

(4) To set the minutes, press the RST SET button once, then press and hold the ST/SP ADV button until the desired minutes are displayed.

(5) To set the seconds, press the RST SET button once, the seconds display will show zero. Press and hold the ST/SP ADV button until the desired seconds are displayed.

(6) Press the RST SET button, the count-down counter is now set.

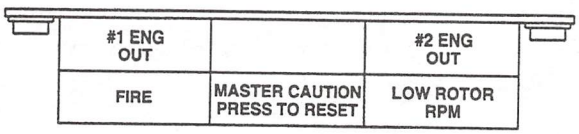

AK0029 SA

Figure 2-33. Master Warning Panel

NOTE

The clock may be used in other modes while the count-down function is active. When the count-down reaches zero, the display will flash. This alarm can be stopped by pressing the ST/SP ADV button or it will stop after one minute automatically. When the counter gets to zero, it reverses and starts counting up. Therefore, it may also be used as an elapsed timer.

(7) Press the ST/SP ADV button, the display will start counting down.

2-226. Master Warning Panel.

Two master caution lights (Figures 2-8 and 2-33) marked MASTER CAUTION PRESS TO RESET are located on the master warning panels of the instrument panel; they light whenever a caution light or message goes on. These lights alert the pilots to direct their attention to the MFDs and/or master warning panels. The master caution lights should be reset at once to alert the pilots if a second condition or malfunction occurs while the first condition is still present. The master caution light can be reset from either pilot position. Four red warning lights, also on the master warning panel, require immediate action if they go on. The markings are #1 ENG OUT, #2 ENG OUT, FIRE, and LOW ROTOR RPM. The LOW ROTOR RPM warning light will flash at a rate of three to five flashes per second if rotor rpm drops below 96% NR. In addition, if NR drops below 96% or NG drops below 55%, a low frequency tone will precede voice messages. The low rotor audio, VWS message, and LOW ROTOR RPM lights are inhibited on the ground through the right landing gear weight-on-wheels switch. The engine out audio, VWS message, ENG OUT lights are not inhibited. The engine out audio, VWS message, ENG OUT lights will go on at 55% NG speed and below. Refer to paragraph 2-37 for description of the FIRE warning lights. Power for the master caution lights is provided from the No.1 dc primary bus through a circuit breaker marked LIGHTS ADVSY. The following indicators are located on the master warning panels:

INDICATOR	FUNCTION
#1 ENG OUT *	NG 1 is at or below 55%.
#2 ENG OUT *	NG 2 is at or below 55%.
LOW ROTOR RPM *	NR is at or below 96% with weight off wheels.
FIRE	A fire detector has actuated a fire warning circuit.
MASTER CAUTION PRESS TO RESET	A caution message on the MFD and/or master warning panel has been actuated by a failed system.
	NOTE: Indicators with asterisk (*) also activate a voice warning message.

2-227. Voice Warning System (VWS).

The VWS provides an audio message for several warning, caution, and advisory messages. The system repeats an audio warning or caution until the message is acknowledged by the pilot. Once the message is acknowledge, the warning or caution will be suppressed. There are three voice announcement formats for the twelve messages. Priority 1 message consists of a 2 second intermittent 250 Hz tone, a 0.5 second gap, the voice message, a 1 second gap, the voice message, and 1 second gap. Priority 2 messages consist of a 2 second continuous 250 Hz tone, a 0.5 second gap, the voice message, a 1 second gap, the voice message, and 1 second gap. Priority 3 through 10 messages consist of the voice message, a 0.5 second gap, the voice message, a 1 second gap, the voice message, and 1 second gap. After acknowledging the voice message by the pilot (MASTER CAUTION PRESS TO RESET or cyclic VOICE ACK button pressed), the voice message will stop. If simultaneous voice messages were activated, the next highest priority voice message will start after acknowledging the present message. Each voice message that was activated must be acknowledged individually. If the pilots fail to acknowledge the voice message, the message will be repeated continuously. Table 2-6 list all VWS messages and the priority

Table 2-6. Voice Warning System Messages

MESSAGE	PRIORITY	FAULT/CONDITION
ALTITUDE LOW	4	Aircraft has descended below altitude set as minimum on the CDU default page RALT SET key.
BING BONG	12	Time set for the countdown timer has expired or the alarm clock is at the time set on the CDU timer page.
CW RADAR JAMMING	8	AN/ALQ-162(V)2 actively jamming.
CW RADAR LOCK	7	AN/ALQ-162(V)2 has detected a CW emitter source, a possible CW guided missile incoming.
ENGINE 1 OUT	2	NG 1 is at or below 55%.
ENGINE 2 OUT	2	NG 2 is at or below 55%.
LOW ROTOR	2	NR is at or below 95%.
PULSE JAMMING AFT	9	AN/ALQ-136(V)2 aft jammer is jamming.
PULSE JAMMING FORWARD	9	AN/ALQ-136(V)2 forward jammer is jamming.
STABILATOR	1	Automatic control of stabilator angle has failed. Pilot must control stabilator with the manual slew switch on the cyclic.
TERRAIN AHEAD	3	A terrain ahead point has been detected by the MMR that exceeds the available hard ride climb angle.

NOTE: When a VWS message with a priority between 5 and 12 is being heard, any APR-39A(v)1 voice message that is activated will also be heard. However, VWS messages between 1 and 4 will not allow an APR-39A message to be heard until all VWS messages are acknowledged.

assigned to each message. Power to the VWS is provided by the No.2 dc primary bus through a circuit breaker marked VWS on the pilot's circuit breaker panel.

2-228. Warning, Caution, Advisory, and Annunciator Systems.

The warning, caution, advisory, and annunciator systems inform the pilots when changes occur in equipment operational status, equipment failures, flight hazards, and flight system information. Warnings, cautions, advisories, annunciators, and operator messages are displayed via MFDs, VWS, master warning panels, AFCS CONTROL panel, BLADE DE-ICE TEST panel, upper console (APU lights), and radar warning indicator. The MFDs will display most of the warnings, cautions, and advisories (WCA) as they occur; however, a few WCAs are displayed by the respective panel only. If simultaneous MFD caution or advisory messages occur, the system will display the highest priority message first. After acknowledging a message, if simultaneous messages occurred, the next highest priority message will be displayed. Voice messages can be acknowledged with the cyclic VOICE ACK button or the MASTER CAUTION PRESS TO RESET. MFD cautions, advisories, and operator messages are acknowledged by the MFD ACK key; however, some messages are automatically acknowledged when the respective system page is accessed. For instance, if an engine temperature message is being displayed, accessing the power train page will acknowledge this message. Annunciator messages cannot be acknowledge by the MFD ACK key, when the conditions which cause the annunciator message to appear no longer exist, the message will be removed from the display. Warning messages are removed when the condition that caused the warning no longer exist. Table 2-7 list all WCA, annunciator, and operator messages that may appear on the MFDs. Figure 3-18 identifies cautions that are displayed on the MFD WCA pages.

Table 2-7. WCA and Annunciator Messages

MESSAGE (WARNING)	FAULT/CONDITION
HYD FAIL	Either condition below will activate the HYD FAIL warning message: Hydraulic fluid level has dropped below 60% of full capacity in both No.1 and backup hydraulic system reservoirs, the No.1 hydraulic pump output pressure is below 2000 ±50 psi, and the second stage pressure is shut off or has dropped below 2000 ±50 psi or the servo pilot valve is jammed. Hydraulic fluid level has dropped below 60% of full capacity in both No.2 and backup hydraulic system reservoirs, the No.2 hydraulic pump output pressure is below 2000 ±50 psi, and the first stage pressure is shut off or has dropped below 2000 ±50 psi or the servo pilot valve is jammed.
OBSTACLE *	A climb angle is required that is greater than 90% of the maximum climb angle available or 12° climb profile, whichever is less. Warning is displayed during TF mode only.
MESSAGE (CAUTION)	**FAULT/CONDITION**
#1 & #2 HYD PUMP FAIL	No.1 and No.2 hydraulic pump output pressures are below 2000 ±50 psi.
#1 CONV FAIL	No.1 converter is inoperative.
#1 FUEL TANK LO	Left main fuel tank is nominally below 172 lbs.
#1 GEN BEARING	No.1 generator bearing has failed or worn excessively.
#1 GEN FAIL	No.1 generator is not supplying power to the electrical buses.
#1 HYD PUMP FAIL	No.1 hydraulic pump output pressure is below 2000 ±50 psi.
#1 INPUT CHIP	Left input module chip sensor has detected metal particles.
#1 NG 12 SEC CC. C	NG 1 is above 102%.
#1 NP SPEED HI	All of the following conditions must exist to activate the #1 NP SPEED HI caution message: TQ 1 is 10% or more than TQ 2. NG 1 is 5% or more than NG 2. NP 1 and NP 2 are matched within 5%. NR is at or above 103%.
#1 NP SPEED LO	All of the following conditions must exist to activate the #1 NP SPEED LO caution message: TQ 2 is 10% or more than TQ 1. NG 2 is 5% or more than NG 1. NP 1 is at or below 98%. NR is at or below 97%.
#1 PUMP/#1+BKUP RSVR	Both conditions must exist to activate the #1 PUMP/#1+BKUP RSVR caution message: No.1 hydraulic pump output pressure is below 2000 ±50. No.1 and backup hydraulic pump reservoir levels have dropped below 60% of full capacity.

Table 2-7. WCA and Annunciator Messages (Cont)

MESSAGE (CAUTION)	FAULT/CONDITION
#1 PUMP/BKUP FAIL	No.1 and backup hydraulic pump output pressures are below 2000 ±50 psi.
#1 PUMP/RSVR LO/BUON	All of the following conditions must exist to activate the #1 PUMP/RSVR LO/BUON caution message: No.1 hydraulic pump output pressure is below 2000 ±50 psi. No.1 hydraulic reservoir fluid level has dropped below 60% of full capacity. Backup pump pressure is being supplied at a pressure above 2350 psi.
#1 TAIL SERVO FAIL	Loss of first stage tail rotor servo pressure.
#2 CONV FAIL	No.2 converter is inoperative.
#2 FUEL TANK LO	Right main fuel tank is nominally below 172 lbs.
#2 GEN BEARING	No.2 generator bearing has failed or worn excessively.
#2 GEN FAIL	No.2 generator is not supplying power to the electrical buses.
#2 HYD PUMP FAIL	No.2 hydraulic pump output pressure is below 2000 ±50 psi.
#2 INPUT CHIP	Right input module chip sensor has detected metal particles.
#2 NG 12 SEC CC. C	NG 2 is above 102%.
#2 NP SPEED HI	All of the following conditions must exist to activate the #2 NP SPEED HI caution message: TQ 2 is 10% or more than TQ 1. NG 2 is 5% or more than NG 1. NP 1 and NP 2 are matched within 5%. NR is at or above 103%.
#2 NP SPEED LO	All of the following conditions must exist to activate the #2 NP SPEED LO caution message: TQ 1 is 10% or more than TQ 2. NG 1 is 5% or more than NG 2. NP 2 is at or below 98%. NR is at or below 97%.
#2 PUMP/#2+BKUP RSVR	Both conditions must exist to activate the #2 PUMP/#2+BKUP RSVR caution message: No.2 hydraulic pump output pressure is below 2000 ±50 psi. No.2 and backup hydraulic pump reservoir levels have dropped below 60% of full capacity.
#2 PUMP/BKUP FAIL	No.2 and backup hydraulic pump output pressures are below 2000 ±50 psi.
#2 PUMP/RSVR LO/BUON	All of the following conditions must exist to activate the #2 PUMP/RSVR LO/BUON caution message: No.2 hydraulic pump output pressure is below 2000 ±50.

Table 2-7. WCA and Annunciator Messages (Cont)

MESSAGE (CAUTION)	FAULT/CONDITION
	No.2 hydraulic reservoir fluid level has dropped below 60% of full capacity.
	Backup pump pressure is being supplied at a pressure above 2350 psi.
AC ESS BUS OFF	Power loss (115 vac, phase B) to the No.2 ac essential bus.
AFCS DEGRADED	Any function of the DAFCS is inoperative.
AHRS FAIL	AHRS is inoperative or not communicating over the 1553B data bus.
APU FAIL	APU was automatically shut down by the electrical sequence unit.
APU OIL HOT	APU temperature is above 162.8°C.
AVIONICS COOLING	At least one avionic compartment temperature is above 135 ±5°F.
BATT LO CHARGE	Battery charge state is below 40% of full charge state.
BATTERY FAIL	Battery has exceeded safe operating temperature or a battery cell dissimilarity exists.
BKUP PUMP FAIL	Backup pump has been commanded on for at least 10 seconds and the backup pump pressure is below 2000 ±50 psi.
BKUP RSVR LO	Backup pump hydraulic fluid level has dropped below 60% of full capacity.
BLNKR FAIL	Blanker is inoperative.
BOOST SERVO OFF	Loss of second stage hydraulic pressure to boost servo, or a boost servo jam.
CW JAM FAIL	CW jammer is inoperative.
CWWR FAIL	CW radar warning receiver is inoperative.
DC ESS BUS FAIL	Power loss (28 vdc) to the dc essential bus.
DISPNSR FAIL	Dispenser will not arm.
DRV SHAFT #1 FAIL	NP 1 is greater than NR by more than 3% and transmitted torque is below 10%.
DRV SHAFT #2 FAIL	NP 2 is greater than NR by more than 3% and transmitted torque is below 10%.
ENG 1 CHIPS	No.1 engine chip sensor has detected metal particles.
ENG 1 FUEL BYPASS	No.1 engine fuel filter has 7.5 psi across filter.
ENG 1 FUEL PRESS LO	No.1 engine pressure is below 8.5 ±0.5 psi between engine driven low pressure fuel pump and high pressure fuel pump.
ENG 1 OIL BYPASS	No.1 engine oil pressure differential is 60 to 80 psi.
ENG 1 OIL HOT	No.1 engine oil temperature is at or above 150°C.
ENG 1 OIL PRESS HI	No.1 engine oil pressure is above 100 psi.
ENG 1 OIL PRESS LO	Any of the following conditions will activate the ENG 1 OIL PRESS LO caution message:
	NG 1 is above 90% and No.1 engine oil pressure is below 35 psi.
	NG 1 is above 70% and No.1 engine oil pressure is below 20 psi.
	NG 1 is at or below 70% and No.1 engine oil pressure is below 18 psi.

Table 2-7. WCA and Annunciator Messages (Cont)

MESSAGE (CAUTION)	FAULT/CONDITION
ENG 1 STRT VLV OPEN	No.1 engine starter circuit is actuated.
ENG 2 CHIPS	No.2 engine chip sensor has detected metal particles.
ENG 2 FUEL BYPASS	No.2 engine fuel filter has 7.5 psi across filter.
ENG 2 FUEL PRESS LO	No.2 engine pressure is below 8.5 ±0.5 psi between engine driven low pressure fuel pump and high pressure fuel pump.
ENG 2 OIL BYPASS	No.2 engine oil pressure differential is 60 to 80 psi.
ENG 2 OIL HOT	No.2 engine oil temperature is at or above 150°C.
ENG 2 OIL PRESS HI	No.2 engine oil pressure is above 100 psi.
ENG 2 OIL PRESS LO	Any of the following conditions will activate the ENG 2 OIL PRESS LO caution message: NG 2 is above 90% and No.2 engine OIL PRESS is below 35 psi. NG 2 is above 70% and No.2 engine OIL PRESS is below 20 psi. NG 2 is at or below 70% and No.2 engine OIL PRESS is below 18 psi.
ENG 2 STRT VLV OPEN	No.2 engine starter circuit is actuated.
ENG TEMP HI	ENG TEMP 1 or ENG TEMP 2 is at or above 903°C.
FLIR FAIL	FLIR is inoperative or not communicating over the 1553B data bus.
GUST LOCK ON	Gust lock is in the lock position.
HI ROTOR RPM	NR is at or above 110%.
HYDR RSVR 1 LO	No.1 hydraulic reservoir fluid level has dropped below 60% of full capacity.
HYDR RSVR 2 LO	No.2 hydraulic reservoir fluid level has dropped below 60% of full capacity.
IAP DEGRADED	IAP has entered graceful degradation.
ICE DETECTED	Ice has been detected by the ice detector sensor.
	WARNING During hostile conditions, the IFF MODE 4 FAIL caution may indicate the aircraft has been identified as a hostile target.
IFF MODE 4 FAIL	IFF failed to respond to a mode 4 interrogation.
INTMD XMSN CHIP	Intermediate gear box chip sensor has detected metal particles.
INTMD XMSN HOT	Intermediate gear box oil temperature is above 140°C.
INU FAIL	INU is inoperative or not communicating over the 1553B data bus.
IRJAM FAIL	IR jammer is inoperative.
LFT PITOT HEAT FAIL	Left pitot heater element is inoperative.

Table 2-7. WCA and Annunciator Messages (Cont)

MESSAGE (CAUTION)	FAULT/CONDITION
LH AGB CHIP	Left hand accessory module chip sensor has detected metal particles.
MAIN XMSN CHIP	Transmission mid-section module chip sensor has detected metal particles.
MN XMSN OIL HOT	Main transmission oil temperature is at or above 140°C.
MN XMSN PRESS HI	Main transmission oil pressure is at or above 130 psi.
MN XMSN PRESS LO	Main transmission oil pressure is below 14 psi.
MR DEICE FAIL	A short or open in the main rotor deice system (which will disable the system).
MR DEICE FAULT	A partial failure of the blade deice system. Uneven shedding of ice can be expected.
MWR FAIL	MWR is inoperative
NO FUEL TRANSFER	During a manual transfer or while in the automatic fuel transfer mode and either main tank has less than 550 pounds of fuel.
PRI SERVO 1 PRESS LO	First stage pressure is shut off or has dropped below 2000 ±50 psi, or the servo pilot valve is jammed.
PRI SERVO 2 PRESS LO	Second stage pressure is shut off or has dropped below 2000 ±50 psi, or the servo pilot valve is jammed.
PULSE FAIL	RF jammer is inoperative.
RADAR FAIL	Multi-mode radar is inoperative or not communicating over the 1553B data bus.
RALT FAIL	Digital altitude data is unreliable.
RH AGB CHIP	Right hand accessory module chip sensor has detected metal particles.
ROTOR BRAKE ON	Rotor brake pressure is greater than 7.5 psi.
RT PITOT HEAT FAIL	Right pitot heater element is inoperative.
RTU1 FAIL	RTU1 is inoperative or not communicating over the 1553B data bus.
RTU2 FAIL	RTU2 is inoperative or not communicating over the 1553B data bus.
RWR FAIL	Radar warning receiver interface cannot apply power.
SAS FAIL	Either of the following conditions will activate the SAS FAIL caution message: Hydraulic pressure applied to the SAS actuator is below 2000 ±50 psi. SAS 1 and SAS 2 are disengaged.
STABILATOR FAIL *	Automatic control of stabilator angle has failed. Pilot must control the stabilator with the manual slew trigger on the cyclic or the MAN SLEW switch on the STABILATOR control panel.
TAIL XMSN CHIP	Tail rotor gear box chip sensor has detected metal particles.
TAIL XMSN HOT	Tail rotor gear box oil temperature is above 140°C.
TR #1 SERVO/BKUP FAIL	Both conditions must exist to activate the TR #1 SERVO/BKUP FAIL caution message: Pressure to the first stage tail rotor servo is below 2000 ±50 psi.

Table 2-7. WCA and Annunciator Messages (Cont)

MESSAGE (CAUTION)	FAULT/CONDITION
	Backup pump has been commanded on for at least 4 seconds and the backup pressure is below 2000 ±50 psi.
TR DEICE FAIL	A short or open in the tail rotor deice system.
TR QDRNT FAIL	Tail rotor cable is broken or disconnected.
	WARNING
	If the VWS fails, there will be no audio tones for stabilator failure, engine out, or low rotor condition.
VWS FAIL	VWS system is inoperative or one of the following voice warning drives has failed: (1) Altitude Low, (2) Missile Alert, (3) Bing Bong Warning, and (4)Terrain Ahead.

MESSAGE (ADVISORY)	FAULT/CONDITION
#2 TAIL SERVO OFF	Pressure to second stage tail rotor servo is below 2000 ±50 psi.
#2 TAIL SERVO ON	Pressure to second stage tail rotor servo is above 2350 psi.
10 MIN TEMP CC. CC	Either of the following conditions will activate the 10 MIN TEMP advisory message:
	Engine No.1 NG speed is at ground idle or above, engine No.1 ENG TEMP is 851°C or above.
	Engine No.2 NG speed is at ground idle or above, engine No.2 ENG TEMP is 851°C or above.
10 SEC TQ CC. C	Any of the following conditions will activate the 10 SEC TQ advisory message:
	Engine No.1 TQ is above 120% when airspeed is below 80 knots.
	Engine No.1 TQ is above 100% when airspeed is 80 knots or above.
	Engine No.2 TQ is above 120% when airspeed is below 80 knots.
	Engine No.2 TQ is above 100% when airspeed is 80 knots or above.
12 SEC NP RPM CC. C	NP1 or NP2 is above 105%.
12 SEC TEMP CC. C	Any of the following conditions will activate the 12 SEC TEMP advisory message:
	Engine No.1 NG speed is at ground idle or above, engine No.1 ENG TEMP is 903°C or above.
	Engine No.1 NG speed is below ground idle, engine No.1 ENG TEMP is 851°C or above.
	Engine No.2 NG speed is at ground idle or above, engine No.2 ENG TEMP is 903°C or above.
	Engine No.2 NG speed is below ground idle, engine No.2 ENG TEMP is 851°C or above.
2.5 MIN TEMP C. CC	Either of the following conditions will activate the 2.5 MIN TEMP advisory message:

Table 2-7. WCA and Annunciator Messages (Cont)

MESSAGE (ADVISORY)	FAULT/CONDITION
	Engine No.1 NG speed is at ground idle or above, engine No.1 ENG TEMP is 878°C or above.
	Engine No.2 NG speed is at ground idle or above, engine No.2 ENG TEMP is 878°C or above.
30 MIN NG RPM CC. C	Either of the following conditions will activate the 30 MIN NG RPM advisory message:
	Engine No.1 NG speed is 99% or above.
	Engine No.2 NG speed is 99% or above.
30 MIN OIL TMP CC:CC	Either of the following conditions will activate the 30 MIN OIL TMP advisory message:
	Engine No.1 oil temperature is at or above 135°C.
	Engine No.2 oil temperature is at or above 135°C.
30 MIN TEMP CC. CC	Either of the following conditions will activate the 30 MIN TEMP advisory message:
	Engine No.1 ENG TEMP is 810°C or above.
	Engine No.2 ENG TEMP is 810°C or above.
ADC FAIL	True airspeed, pressure altitude, air temperature, or indicated airspeed data is invalid or ADC inoperative.
ADF FAIL	LFADF is inoperative or unable to communicate over the 1553B data bus.
ADF TEST FAIL	IBIT detected a partial failure in the LFADF.
ADVISORY COUNT	Displays the number of active advisories.
AHRS DG/VG	AHRS has entered the DG/VG mode.
AHRS MODE AVAIL	AHRS navigation mode is recommended.
AHRS TEST FAIL	AHRS can only communicate on bus A or bus B of the 1553B data bus.
AIU FAIL	RTU 2 has detected an AIU failure.
AIU TEST FAIL	A partial detected in the AIU or RTU interface associated with the AIU.
ALTITUDE SOURCE CHG	An automatic switch of altitude sources has occurred.
APU ACCUM LO	APU accumulator pressure is low.
APU OFF	APU speed is 95% or below for 1.5 seconds.
APU ON	APU speed is above 95% for 1.5 seconds.
ATHS FAIL	ATHS in inoperative or unable to communicate over the 1553B data bus.
ATHS TEST FAIL	IBIT detected a partial failure in the ATHS.
ATTITUDE DISAGREE	A difference between INU and AHRS pitch or roll attitudes of more than 1 degree.
ATTITUDE SOURCE CHG	An automatic switch of attitude sources has occurred.
AZ RANGING USED	FLIR azimuth ranging is being used for cursor position keeping in air-to-ground ranging.

Table 2-7. WCA and Annunciator Messages (Cont)

MESSAGE (ADVISORY)	FAULT/CONDITION
BEACON FAIL	Beacon reference voltage is inoperative or RTU-beacon encode/decode command interface has failed.
BINGO FUEL XXX	Fuel remaining is less than 344 pounds for the current leg or flight.
BKUP HYD PUMP ON	Back-up pump pressure is above 2350 psi.
BUFFER 1 OVERFLOW	First buffer is to be filled with new data, but the buffer is not completely empty.
BUFFER 2 OVERFLOW	Second buffer is to be filled with new data, but the buffer is not completely empty.
CDU CP FAIL	Copilot's CDU is inoperative or unable to communicate over the 1553B data bus.
CDU CP TEST FAIL	IBIT detected a partial failure in the copilot's CDU.
CDU P FAIL	Pilot's CDU is inoperative or unable to communicate over the 1553B data bus.
CDU P TEST FAIL	IBIT detected a partial failure in the pilot's CDU.
CG OUT OF LIMITS XXX	Longitudinal CG falls outside of predefined limits.
CHAFF COUNT LO	Five or less chaff cartridges are in the dispenser.
CHAFF COUNT ZERO	There are no chaff cartridges left in the dispenser.
COMPUTER 1 PRIME	Backup computer 1 is becoming primary, computer 2 is no longer primary.
COMPUTER 2 PRIME	Backup computer 2 is becoming primary, computer 1 is no longer primary.
COMPUTER BATTERY LO	Mission processor batteries is at a very low power condition, replace batteries as soon as possible.
COMPUTER SYNC LOSS	Stage 3 of graceful degradation or backup MP needs to be reinitialized to bring MPs into synchronization.
CWJAM TEST FAIL	IBIT detected a partial failure in the RTU interface with the AN/ALQ-162(V)2.
DISPLAY UPDATE LOST	IAP processing is approaching capacity.
DOPPLER FAIL	Doppler is inoperative or unable to communicate over the 1553B data bus.
DOPPLER TEST FAIL	IBIT detected a partial failure in the Doppler.
DP CP FAIL	Copilot's display processor in inoperative or unable to communicate over the 1553B data bus.
DP CP HOT	Copilot's display processor power supply has exceeded temperature limit of 99°C.
DP CP TEST FAIL	IBIT detected a partial failure in the copilot's display processor.
DP P FAIL	Pilot's display processor in inoperative or unable to communicate over the 1553B data bus.
DP P HOT	Pilot's display processor power supply has exceeded temperature limit of 99°C.
DP P TEST FAIL	IBIT detected a partial failure in the pilot's display processor.
DTM TEST FAIL	IBIT detected a partial failure in the MAP's data transfer module.
DX LIMIT	Specified data tranfer rate exceeds the predefined extraction rate.
EIA ALIGN FAIL	INU EIA alignment has been aborted.

Table 2-7. WCA and Annunciator Messages (Cont)

MESSAGE (ADVISORY)	FAULT/CONDITION
ENG 1 AI ON	No.1 engine anti-ice/start bleed valve is open.
ENG 1 DEC	No.1 engine DEC has detected faults in the No.1 engine control system.
ENG 1 INLT AI ON	No.1 engine inlet anti-icing air temperature is at or above 93°.
ENG 2 AI ON	No.2 engine anti-ice/start bleed valve is open.
ENG 2 DEC	No.2 engine DEC has detected faults in the No.2 engine control system.
ENG 2 INLT AI ON	No.2 engine inlet anti-icing air temperature is at or above 93°.
ENG NP RPM LO	Either engine power turbine speed is at or below 95% with weight off wheels.
ENG TORQUE SPLIT	Both conditions must exist to activate the ENG TORQUE SPLIT advisory message: Difference between TQ 1 and TQ 2 is 10% or more. Difference between NP 1 and NP 2 is 5% or less.
EXCESS GROSS WT XXX	Gross weight exceeds 24,500 pounds for the current leg or flight.
EXCESS PWR RQD XXX	More TQ is required for the current mode of flight, additional TQ is not available.
EXCESS SPD RQD XXX	True airspeed required will be above its normal limit for the current leg or flight.
F/D MODE DISENG	Vertical velocity available or guidance data availability is unavailable for the current guidance mode.
FLARE COUNT LO	Five or less flare cartridges are in the dispenser.
FLARE COUNT ZERO	There are no flare cartridges left in the dispenser.
FLIR HOT	FLIR turret temperature is greater than 24°C (75°F) or signal electronics unit temperature is greater than 43°C (110°F).
FLIR TEST FAIL	IBIT detected a partial failure in the FLIR.
GPS 2 HOUR ALERT	GPS SA/AS keys stored within the GPS receiver will expire within two hours.
GPS ANNUAL KEY	Informs the pilots that the GPS receiver is using GUVs.
GPS CONTAINS KEYS	Informs the pilots that the GPS receiver contains keys.
GPS FAIL	GPS is inoperative or unable to communicate over the 1553B data bus.
GPS INIT FAIL	No data sent to GPS during initialization.
GPS KEY BAD	Informs the pilots that an external entry (CV or GUV) failed parity.
GPS KEY RCVD BAD	Informs the pilots that the CV user key was incorrect or the GUV user issue number was invalid.
GPS KEY VERIFIED	Informs the pilots that the CV user has not been verified or the GUV user does not contain a key for the current day.
GPS MISSION DURATION	Displays the number of days in the GPS receiver for mission(s).
GPS MODE AVAIL	GPS navigation mode is recommended.
GPS NAV FAIL	No data sent to GPS receiver during navigation.

Table 2-7. WCA and Annunciator Messages (Cont)

MESSAGE (ADVISORY)	FAULT/CONDITION
GPS TEST FAIL	IBIT detected a partial failure in the GPS.
GPS ZEROIZE ERROR	Informs the pilots that the SA/AS zeroize command to erase all keys could not be verified.
GUID MODE DISENG	Disengagement of active guidance mode.
HF FAIL	HF radio is inoperative or unable to communicate over the 1553B data bus.
HF OUT OF TUNE	HF antenna is not properly tuned.
HF SEC FAIL	KY-75 has failed cipher/plain mode check as commanded by RTU.
HF TEST FAIL	IBIT detected a partial failure in the HF.
ICS FAIL	Interface failure of one or more radio select indicators for RTU No.1 or RTU No.2.
ICS TEST FAIL	IBIT detected a partial failure in the No.1 or No.2 RTU interface with EMCON or MUTE enable of the audio junction box.
IFF FAIL	IFF unable to communicate on BUS A or BUS B of the 1553B data bus, or total loss of IFF functions (mode 4 disabled).
IFF SEC FAIL	IBIT detected a failure in the KIT-1C/TSEC.
IFF SEC TEST FAIL	IBIT detected a partial failure in the KIT-1C/TSEC.
IFF TEST FAIL	IBIT detected a partial failure in the IFF and/or KIT-1C/TSEC.
IMPOSS SPD RQD XXX	True airspeed is greater than 182 knots for the current leg or flight.
INTERCEPT IMPOS	Time to next moving waypoint exceeds the maximum specified time.
INU MODE AVAIL	INU navigation mode is recommended.
INU TEST FAIL	IBIT detected a partial failure in the INU.
LANDING LIGHT ON	Landing light has been turned on.
MAP FAIL	MDG unable to communicate on BUS A or BUS B of the 1553B data bus, or total loss of MAP/DTM data cartridge data or DTM door is open.
MAP HOT	Map has exceeded its temperature limit of 87°C.
MAP TEST FAIL	IBIT detected a partial failure in the map display generator.
MFD CPL FAIL	Copilot's left MFD in inoperative or unable to communicate over the RS 422 data link.
	NOTE If ambient temperature around the MFDs is greater than 55°C, the MFD will show MFD HOT advisory message on power up. This is normal and will clear once the fans cool the deflection deck(s).
MFD CPL HOT	Copilot's left MFD has deflection deck exceeded its temperature limit of 93 ±5°C.
MFD CPL TEST FAIL	IBIT detected a partial failure in the copilot's left MFD.
MFD CPR FAIL	Copilot's right MFD in inoperative or unable to communicate over the RS 422 data link.
MFD CPR HOT	Copilot's right MFD deflection deck has exceeded its temperature limit of 93 ±5°C.

Table 2-7. WCA and Annunciator Messages (Cont)

MESSAGE (ADVISORY)	FAULT/CONDITION
MFD CPR TEST FAIL	IBIT detected a partial failure in the copilot's right MFD.
MFD PL FAIL	Pilot's left MFD in inoperative or unable to communicate over the RS 422 data link.
MFD PL HOT	Pilot's left MFD has deflection deck exceeded its temperature limit of 93 ±5°C.
MFD PL TEST FAIL	IBIT detected a partial failure in the pilot's left MFD.
MFD PR FAIL	Pilot's right MFD in inoperative or unable to communicate over the RS 422 data link.
MFD PR HOT	Pilot's right MFD has deflection deck exceeded its temperature limit of 93 ±5°C.
MFD PR TEST FAIL	IBIT detected a partial failure in the pilot's right MFD.
MLV FULL	One hundred ninty-seven 4K blocks have been transmitted to the MLV.
MLV HALF FULL	Ninty-eight 4K blocks have been transmitted to the MLV.
MLV I/O FAIL	MLV is not responding to the MP.
MP1 FAIL	No.1 mission processor is inoperative or unable to communicate reliably on Channel 0 or Channel 1 of the 1553B data buses.
MP1 HOT	No.1 mission processor has exceeded its temperature limit of 93 ±4°C.
MP1 TEST FAIL	IBIT detected a partial failure in the No.1 mission processor or backup batteries have a low charge.
MP2 FAIL	No.2 mission processor is inoperative or unable to communicate reliably on Channel 0 or Channel 1 of the 1553B data buses.
MP2 HOT	No.2 mission processor has exceeded its temperature limit of 93 ±4°C.
MP2 TEST FAIL	IBIT detected a partial failure in the No.2 mission processor or backup batteries have a low charge.
MWR 47 TEST FAIL	IBIT detected a partial failure in the MWR 47 Subsystem.
NAVMODE CHANGE	Navigation mode has automatically changed due to a loss of availability of the current navigation mode.
NAV DEGRADED	Navigation mode has automatically changed due to a loss of the current mode.
OMEGA FAIL	Interface failure between RTU2 and OMEGA navigation unit or total loss of OMEGA functions. (Provisional)
PARKING BRAKE ON	PARKING BRAKE handle is pulled.
PLS FAIL	PLS unable to communicate on BUS A or BUS B of the 1553B data bus, or total loss of PLS functions.
PLS TEST FAIL	IBIT detected a partial failure in the PLS.
PRI/BOOST PUMP ON	FUEL PUMP switch is at APU BOOST or FUEL PRIME.
PULSE TEST FAIL	IBIT has detected a partial failure in the RF jammer.
RADAR HOT	Temperatures greater than the following has been detected: radar data processor greater than 85°C (185°F), pre-regulator unit greater than 116°C (241°F), radar antenna/receiver greater than 116°C (241°F), or the radar receiver unit greater than 116°C (241°F).

Table 2-7. WCA and Annunciator Messages (Cont)

MESSAGE (ADVISORY)	FAULT/CONDITION
RADAR TEST FAIL	IBIT detected a partial failure in the multi-mode radar.
RALT/BALT TRANS	Transition to barometric altimeter data from radar altimeter data during DHOV/GA guidance mode.
RALT TEST FAIL	IBIT detected a partial failure in the radar altimeter.
	NOTE The RECD MESS PENDING advisory will not reset until the current message has been reviewed; therefore, the pilots will be unaware of any other ATHS messages while a message is pending review.
RECD MESS PENDING	A message has been received from another ATHS.
ROTOR RPM HI	Main rotor rpm is at or above 103% and HI ROTOR RPM caution message is off.
RTU 1 TEST FAIL	IBIT detected a partial failure in the No.1 RTU.
RTU 2 TEST FAIL	IBIT detected a partial failure in the No.2 RTU.
RWR TEST FAIL	IBIT detected a partial failure in the No.1 or No.2 RTU interface with the self test initiate or mode signals of the AN/APR-39A(V)1.
SEARCH LIGHT ON	DC power is applied to the search light control relay.
SINCGARS FAIL	SINCGARS is unable to communicate on the 1553B data bus or total loss of SINCGARS functions.
SINCGARS SCAN LOCK	SINCGARS has locked on a channel while scanning.
SINCGARS TEST FAIL	SINCGARS can only communicate on bus A or bus B of the 1553B data bus.
SINC SEC FAIL	RTU 2 has detected a fault with SINCGARS secure.
SINC SEC TEST FAIL	IBIT has detected a partial failure in RTU 2 interface for the SINCGARS KY-58.
TACAN FAIL	TACAN unable to communicate reliably with RTU1 or total loss of TACAN functions.
TACAN TEST FAIL	IBIT detected a partial failure in the TACAN or RTU interface associated with the TACAN.
TIME SYSTEM	Indicates that there is no valid time and date data, and the pilot should not attempt to command the GPS receiver into the navigation mode until manual entry is performed.
TRN MODE AVAIL	SITAN navigation mode is recommended.
TRN NEEDS INIT	TRN has entered line of sight mode and requires re-initialization.
TRUE HDG DISAGREE	A difference between INU and AHRS heading of 2 degrees or more for 2 minutes.
UHF FAIL	UHF unable to communicate on the 1553B data bus or total loss of UHF functions.
UHF SEC FAIL	RTU 2 has detected a fault with UHF secure.
UHF SEC TEST FAIL	IBIT detected a partial failure in the No.2 RTU interface for the UHF KY-58.
UHF TEST FAIL	UHF unable to communicate on BUS A or BUS B of the 1553B data bus.
VCR FAIL	VCR unable to communicate with RTU or total loss of VCR functions, or VCR door is unlocked.

Table 2-7. WCA and Annunciator Messages (Cont)

MESSAGE (ADVISORY)	FAULT/CONDITION
VCR TEST FAIL	VCR door is open/unlocked or IBIT detected a partial failure in the VCR.
VHF AMP FAIL	VHF power amplifier unable to communicate on the 1553B data bus or total loss of VHF power amplifier functions.
VHF SEC FAIL	RTU 1 has detected a fault with VHF secure.
VHF SEC TEST FAIL	IBIT detected a partial failure in the No.1 RTU interface for the VHF KY-58.
VHF FAIL	VHF unable to communicate on the 1553B data bus or total loss of VHF functions.
VHF TEST FAIL	VHF can only communicate on BUS A or BUS B of the 1553B data bus.
VOR TEST FAIL	IBIT detected a partial failure in the VOR or RTU interface associated with the VOR.
VWS TEST FAIL	IBIT detected a partial failure in the VWS.
XMSN OIL PRESS HI	Main transmission oil pressure is at or above 65 psi, but is below 130 psi.
MESSAGE (ANNUNCIATORS)	**FAULT/CONDITION**
ADF	ADF mode is active.
AGR GIMBAL LIMIT	Air-To-Ground Ranging gimbal has reached its limits.
AGR LOCK ON	MMR has locked on to the FLIR designated target.
AGR RNG LIMIT	MMR has reached its range limit in the AGR mode.
AHRS/DPLR	AHRS/Doppler navigation mode is active.
AIR DATA	Air Data navigation mode is active.
APPR XXX ARM	Approach mode has been selected; however, the approach phase is not active for NRP XXX.
APPR XXX	Approach mode is active for NRP XXX.
ASE JAMMER ARMED	Radar jammers are armed.
ASE/CM ARMED	Radar jammers and chaff/flare dispensers armed.
BIS PAUSE ACTIVE	BIS PAUSE has been selected.
BIS MODE ACTIVE	BIS MODE has been selected.
CARGO HOOK ARMED	Some or all of the cargo hook control switches are activated for releasing of the cargo hook load.
CARGO HOOK OPEN	Cargo hook is open.
CHAFF/FLARE ARMED	Chaff/flare dispensers are armed.
CHAFF LAUNCHED	Chaff cartridge has been launched from dispenser.
CLIMB LIMITED	Aircraft climb angle potential is less than 6°, TF mode only.
CW RDR JAMMING	Indicates an ALQ-162 threat B alert.
CW RADAR LOCK	Indicates an ALQ-162 threat A alert.

Table 2-7. WCA and Annunciator Messages (Cont)

MESSAGE (ANNUNCIATORS)	FAULT/CONDITION
DECISION HEIGHT	Decision height has been reached for the ILS or ILS BC approach.
DHOV/GA	Depart hover/go around mode is active.
DOPPLER MEMORY	Doppler has been in memory for at least 2 minutes.
EMCON ACTIVE	EMCON has been selected for all emitters.
EXCESS DRIFT	Selected ground track (course) and present position ground track drift angle has exceeded the limits of the MMR antenna for reliable returns.
EXT PWR ON	External power is connected to the aircraft.
FLARE LAUNCHED	Flare cartridge has been launched from dispenser.
G/S CAPTURE	ILS glideslope captured, deviations can be displayed on MFDs.
G/S UNREL	Glideslope data is unreliable.
GPS/DPLR	GPS/DPLR navigation mode is active.
GPS/INU	GPS/INU navigation mode is active.
GPS	GPS navigation mode is active.
HOLD MEM ACTIVE	SINCGARS has ECCM data in holding memory.
HOIST ARMED	Some or all of the rescue hoist control switches are activated for shearing of the rescue hoist cable.
HOVER HOLD	Hover hold mode is active.
IDENT	Transponder Identification function has been activated.
ILS ARM	ILS mode has been selected; however, the ILS glideslope or localizer has not been captured (aircraft is not within range/azimuth).
ILS BC ARM	ILS BC mode has been selected; however, the ILS BC has not been captured (aircraft is not within range/azimuth/altitude parameters of ILS BC signal).
ILS BC	ILS BC mode is active.
ILS	ILS mode is active.
INNER MKR	Inner marker beacon signal is being received.
INU/DPLR	INU/DPLR navigation mode is active.
IRCM COOLDOWN	IRJAM has been powered off and is cooling down.
INU	INU navigation mode is active.
JAM WARNING	MMR has detected jamming signals which may result in false command cues (i.e., false climb cues).
LAT DIR INACTIVE	Lateral guidance mode is active and guidance data has been unavailable at least once since the mode became active.
LO SPEED TF	Ground speed is below 40 when terrain following mode is active.
LOC CAPTURE	ILS localizer captured, deviations can be displayed on MFDs.

Table 2-7. WCA and Annunciator Messages (Cont)

MESSAGE (ANNUNCIATORS)	FAULT/CONDITION
LOC UNREL	Localizer data is unreliable.
LON DIR INACTIVE	Longitudinal guidance mode is active and guidance data has been unavailable at least once since the mode became active.
LOOKAHEAD MODE	Map video lookahead mode has been selected on an MFD; therefore, map video cannot be displayed on any other MFD.
MANEUVER LIMIT	Aircraft has exceeded MMR antenna maneuver limits (roll rate, elevation (nose up or down), or turn rate limit).
MAYDAY	Transponder emergency mode is active.
MIDDLE MKR	Middle marker beacon signal is being received.
MISSED APPR	Excessive lateral or vertical deviation during an approach.
MODE 4 REPLY	IFF has responded to Mode 4 interrogations.
NRP CSE XXX	NRP mode (course to) is active for NRP XXX.
NRP XXX	NRP mode (direct to) is active for NRP XXX.
OBSTACLE LEFT	During TF operation, the radar has detected an obstacle to the left of the ground track vector.
OBSTACLE RIGHT	During TF operation, the radar has detected an obstacle to the right of the ground track vector.
OUTER MKR	Outer marker beacon signal is being received.
PLS	PLS mode is active.
PLS DME XXXX (XX. X)	Distance to PLS transmitter.
PULSE AFT JAM	Aft pulse jammer is jamming.
PULSE AFT LOCK	Aft threat detected, aft pulse jammer is not jamming.
PULSE FWD JAM	Forward pulse jammer is jamming.
PULSE FWD LOCK	Forward threat detected, forward pulse jammer is not jamming.
RALT IN CONTROL	Terrain following mode is active and command plane cues are being generated by the radar altimeter data rather than the MMR returns.
RF INHIBITED	Radar emissions have been inhibited; however, system is operational.
RIDE INVALID	MMR has defaulted to a SOFT ride setting because the aircraft maximum climb data is unreliable.
SINCGARS CUE	Another radio is trying to make contact over the SINCGARS radio.
TACAN	TACAN mode is active.
TACAN ARM	TACAN mode has been selected; however, the TACAN station has not been captured(aircraft is not within range of TACAN signal).
TACAN PT PT	TACAN point-to-point mode is active.

Table 2-7. WCA and Annunciator Messages (Cont)

MESSAGE (ANNUNCIATORS)	FAULT/CONDITION
TCN BRG UNREL	TACAN bearing data is unreliable.
TCN DME UNREL	TACAN distance data is unreliable.
TCN DME XXX. X	Distance to TACAN station.
TF	TF guidance mode is active.
TF ARM	Terrain following mode is active.
TF DATA BAD	MMR command plane cues are unreliable.
TF FAIL	Total loss of MMR functions.
TF LO ALTITUDE	Radar altitude data is unreliable or aircraft is below 80% of the set clearance value.
TF/NAV FAIL	INU and/or Doppler navigation data supporting the terrain following mode is unreliable.
TF NEAR RANGE	MMR does not have sufficient near range data for command plane cues.
TRACK	TRACK mode is active.
TRN	TRN navigation mode is active.
VERT DIR INACTIVE	Vertical guidance mode is active and guidance data has been unavailable at least once since the mode became active.
VERT SPEED	Vertical speed mode is active.
VOR ARM	VOR mode has been selected; however, the VOR station has not been captured (aircraft is not within range of VOR signal).
VOR UNREL	VOR data is unreliable.
VOR	VOR mode is active.
VORTAC ARM	VORTAC mode has been selected; however, the VORTAC station has not been captured (aircraft is not within range of VORTAC signal).
VORTAC	VORTAC mode is active.
WYPT CSE XXX	Waypoint mode (course to) is active for NRP XXX.
WYPT XXX	Waypoint mode (direct to) is active for NRP XXX.

MESSAGE (OPERATOR)	FAULT/CONDITION
A/C BBB/RRRR	Displays bearing and range of aircraft-to-cursor function. BBB - Aircraft cursor Bearing in degrees. RRRR (UTM) - Aircraft cursor range in yards if less than 9145 meters or in kilometers if greater than 9145 meter. RRRR (LAT/LONG) - Aircraft cursor range in yards if less than 30000 feet or in nautical miles if greater than 30000 feet.
AAAAAAA RXXX. XX BXXX	Displays to the operator the result of the attempted update.

Table 2-7. WCA and Annunciator Messages (Cont)

MESSAGE (OPERATOR)	FAULT/CONDITION
	AAAAAAA = Update type: FLYOVER, FLIR, MAP, OMEGA, RADAR, TACAN, or VORTAC.
	RXXX. XX - Update range in nautical miles.
	BXXX - Update bearing in degrees.
AHRS POSITION UPDATE FAIL	Indicates that the position fix being sent to the AHRS has failed.
ALARM CLOCK	Consists of an indication of the alarm clock alarm state.
AUTH TABLE LO	ATHS authentication codes are low in the authentication table storage, insert additional codes when available.
BARO ALT sXXXXX PRESS XXXXXX	Displays flyover barometric calibration results.
	BARO ALT sXXXXX - Barometric altitude in feet (s = + or - symbol).
	PRESS XXXXXX - Barometric pressure units in inches or millibars.
	NOTE
	If the BUFFER FULL annunciator message is acknowledged without viewing present messages, the BUFFER FULL message will not reappear and subsequent messages will be lost.
BUFFER FULL	ATHS message storage buffer is full, no other messages can be received until some of the previous messages are viewed. A maximum of 10 messages can be stored by the ATHS.
CARTRIDGE FULL	Indicates that additional data blocks may not be loaded onto the DTM cartridge without exceeding the NRP of flight plan log data address boundaries.
COMM PLAN ERASED	Indicates to the operator that the frequencies of the communications radios have been erased.
COMPASS NOT LEVEL	Indicates that the operator should level the aircraft to continue the flux valve calibration.
COUNTDOWN ALARM	Indicates the countdown timer alarm state.
DIST XXX. X GS XXX TIME HH:MM FUEL XXXX	Displays the results of a flight plan delta function.
	DIST XXX. X - DELTA distance in nautical miles.
	GS XXX - DELTA speed is knots.
	TIME HH:MM - DELTA ETE is hours/min.
	FUEL XXXX - DELTA fuel use is pounds.
DP S/W VERSIONS DMP: XX. X SGP: XX. X	Indicates to the operator the software versions for the display management processor (DMP) and symbol generator processor (SGP).
	DMP: XX. X - DMP software version.
	SGP: XX. X - SGP software version.

Table 2-7. WCA and Annunciator Messages (Cont)

MESSAGE (OPERATOR)	FAULT/CONDITION
FLIGHT PLAN CALCULATION INVALID	Indicates that the Flight Plan Calculations are invalid due to invalid or unusable inputs.
FLIGHT PLAN ERASED	Indicates to the operator that the flight plan has been erased.
FLUX VALVE CAL ACCEPTED XXXXXXXXX	Indicates to the operator that the mission computer has commanded the AHRS to accept the results of the current flux valve calibration (XXXXXXXXX - FAIR, GOOD, or EXCELLENT).
FLUX VALVE CAL HEADING XXX	Indicates to the operator that the AHRS desires a certain heading for the Flux Valve Calibration (XXX - degrees.)
FLUX VALVE CAL REJECTED	Indicates to the operator that the mission computer has commanded the AHRS to reject the results of the current flux valve calibration.
FUNCTION INOPERATIVE	Alerts the operator that the function requested via MFD or CDU is unavailable.
GGZSSEEEENNNN CEP FFFFF	Present position information displayed in UTM. GGZ - Grid zone designator. SS - Grid square identifier. EEEE - Easting coordinate in meters. NNNN - Northing coordinate in meters. CEP FFFFF - Possible position error measured in diameter around system coordinates.
HOVER BIAS CAL ACCEPTED	Indicates to the operator that the hover bias calibration was completed successfully.
HOVER BIAS CAL REJECTED	Indicates to the operator that the hover bias calibration was not completed successfully.
ILLEGAL ACTION	Indicates to the operator that he has attempted an illegal action.
INVALID FREQUENCY	Indicates to the operator that he has attempted to tune the SINCGARS radio to an invalid frequency.
INVALID HEADING	Indicates to the operator that the FLIR azimuth is out of tolerance during FLIR calibration.
MAP DATA UNAVAILABLE	Indicates to the operator that there is no data available in the map database for processing the selected map function.
MAP THREAT NOT FOUND	Indicates to the operator that a threat cannot be deleted from the map database because a threat with the requested tag does not exist.
MAP THREAT TABLE FULL	Indicates to the operator that the map threat table is full.
MAP THREAT TAG IN USE	Indicates to the operator that a threat cannot be added to the map database because a threat with the requested tag currently exists.
N XX°XX. XX E XXX°X. XX CEP FFFFF	Present position information displayed in Lat/Long.

Table 2-7. WCA and Annunciator Messages (Cont)

MESSAGE (OPERATOR)	FAULT/CONDITION
	N XX°XX. XX - N for northern latitude (S if southern latitude) and XX. XX. XX= Latitude in degrees/minutes/seconds.
	E XXX°XX. XX - E for eastern longitude (W if western longitude) and XXX. XX. XX= Longitude in degrees/minutes/seconds.
	CEP FFFFF - Possible position error measured in diameter around system coordinates.
N XX°XX. XX E XXX°X. XX HH:MM:SS	Present position information displayed in Lat/Long.
	N XX°XX. XX - N for northern latitude (S if southern latitude) and XX. XX. XX= Latitude in degrees/minutes/seconds.
	E XXX°XX. XX - E for eastern longitude (W if western longitude) and XXX. XX. XX= Longitude in degrees/minutes/seconds.
	HH:MM:SS - System time in hours, minutes, and seconds.
NRP TABLE ERASED	Indicates to the operator that the NRP table has been erased.
DEPRESS AGAIN TO VERIFY	Request to the operator to depress the same key again to verify when a protected key has been depressed.
PLS DATA STALE	Indicates to the operator that the system requires a new PLS interrogate when not in the auto burst mode.
PT BBB/RRRR	Displays bearing and range of point-to-cursor function.
	BBB - Point cursor bearing in degrees.
	RRRR (UTM) - Point cursor range in yards if less than 9145 meters or in kilometers if greater than 9145 meters.
	RRRR (LAT/LONG) - Point cursor range in yards if less than 30000 feet or in nautical miles if greater than 30000 feet.
RADIO BUSY	Indicates to the operator that the radio is busy and that the selected function cannot be performed.
RANGE UNAVAILABLE	Indicates to the operator that either the map or multi-mode radar does not support the currently selected range on and MFD.
REPLACE LRU XXXX	Displays the LRU number for a selected LRU on the equipment status page if a fault has occurred. (Refer to Maintenance Manual of LRU failure codes.)
RRRR RADIO UNAVAIL-ABLE	Indicates to the operator that the selected radio is not usable (RRRR - HF, PLS, UHF, SINC, VHF, SCOM, OR GCOM).
sHH:MM:SS RRRR C NN XXXXXXX HH:MM:SS	Displays time ahead/behind, active radio, clear or secure mode for active radio, channel/ preset number, active radio frequency, and current time in the VSD symbology mode.
	sHH:MM:SS - Time ahead/behind (s = + or - symbol) in hours/minutes/seconds.
	RRRR - Active radio (HF, PLS, SCOM, UHF, SINC, VHF, or GCOM).
	C - Clear condition of active radio (S is displayed if radio is in the secure mode).
	NN - Channel/Preset number of active radio.

Table 2-7. WCA and Annunciator Messages (Cont)

MESSAGE (OPERATOR)	FAULT/CONDITION
	XXXXXXX - Frequency of active radio.
	HH:MM:SS - Current time in hours, minutes, and seconds.
sHH:MM:SS RRRR C NN XXXXXXX KKK HH:MM:SS	Displays time ahead/behind, active radio, clear or secure mode for active radio, channel/ preset number, active radio frequency, and reference groundspeed in the HSD symbology mode.
	sHH:MM:SS - Time ahead/behind (s = + or - symbol) in hours/minutes/seconds.
	RRRR - Active radio (HF, PLS, SCOM, UHF, SINC, VHF, or GCOM).
	C - Clear condition of active radio (S is displayed if radio is in the secure mode).
	NN - Channel/Preset number of active radio.
	XXXXXXX - Frequency of active radio.
	KKK - Guidance reference groundspeed in knots.
SINCGARS SEQUENCE ERROR	SINCGARS operation did not complete properly.
SINCGARS TOD REQUIRED	During an ERF send, the SINCGARS radio reported that a time of day was required.
SINCGARS ZEROIZE FAIL	SINCGARS failed to zeroize.
TRQ AVL XXX RQD XXX	When hover override is active (asterisk present), torque available and torque required are calculated and displayed based on operator entered values. The operator can also enter changes to gross weight, FAT, pressure altitude, wheel height, and windspeed to derive torque available and torque required for projected conditions.
	AVL XXX - Hover override is inactive, displays ten-minute torque available using IASS current FAT and pressure altitude.
	RQD XXX - Hover override is inactive, displays torque required using IASS current gross weight, FAT, pressure altitude, wheel height, and windspeed.
TACAN SIGNAL DEGRADED	The TACAN is not receiving a valid signal.

NOTE:
1. Single (*) - A voice warning message will be heard when this message appear on the MFDs.
2. XXX - Numerical value.
3. XXX. X - TACAN DME distance in nautical miles.
   XXXX - PLS DME distance in feet (max 4999).
   XX. X - PLS DME distance in nautical miles (when distance in greater than 4999 feet).
4. CC. C - Time in seconds and tenths of a second.
   CC. CC - Time in minutes and seconds.

Section XV SERVICING, PARKING, AND MOORING

2-229. Servicing.

Servicing information is given by systems or components. Points used in frequent servicing and replenishment of fuel, oil and hydraulic fluid are shown in Figure 2-34. Fuel and lubricant specifications and capacities are in Table 2-8. Table 2-9 contains a listing of acceptable commercial fuel.

2-230. Service Platforms and Fairings.

Service platforms (Figure 2-35) are a part of the engine cowlings, providing access to the engines. Each service platform is about 46 inches long and 18 inches wide. It is capable of supporting a static weight of 600 pounds on any area without yielding. The platform is made of composite metal and fiberglass with a honeycomb core. The engine cowling is opened by releasing a latch on the side and pulling outward on a locking handle. The cowling is opened outward and down, providing a standing area at the lower section. When closed, the cowling lock prevents opening in flight.

2-231. Fuel System Servicing.

a. Main tanks (Figure 2-34) may be serviced simultaneously through pressure refueling, closed circuit refueling, or aerial refueling. They may be serviced individually by gravity refueling through refueling ports on the left and right sides of the helicopter.

NOTE

See Figure 6-4, Asymmetric Fuel Loads, when servicing aircraft fuel systems.

b. Servicing of the external tanks can be done by gravity refueling through refueling ports on the forward top edge of each tank. Pressure, closed circuit, and aerial refueling can be used to refuel these tanks. Ground refueling of external tanks with the aircraft shutdown is possible if the FUEL MGT panel MODE SEL and MAN EXT TANK switches are at the REFUEL, MANUAL, and FLOW positions prior to engine shutdown.

c. Internal auxiliary tanks are refueled in the same manner as main tanks; however, the FUEL MGT panel INT AUX switch must be in the REFUEL position. Ground refueling of internal auxiliary tank(s) with the aircraft shutdown is possible if the FUEL MGT panel INT AUX switch is at the REFUEL position prior to engine shutdown.

2-232. Fuel Types.

Fuels are classified in Table 2-8.

2-233. Use of Fuels

Mixing of fuels in fuel tanks. When changing from one type of authorized fuel to another, for example JP-4 to JP-5, it is not necessary to drain the helicopter fuel system before adding the new fuel. Fuels having the same NATO code number are interchangeable. Jet fuels conforming to ASTM D-1655 specification may be used when MIL-T-5624 fuels are not available. This usually occurs during cross-country flights where helicopters using NATO F-44 (JP-5) are refueled with NATO F-40 (JP-4) or Commercial ASTM Type B fuels. Whenever this condition occurs, the operating characteristics may change in that lower operating temperature: slower acceleration, easier starting, and shorter range may be experienced. The reverse is true when changing from F-40 (JP-4) fuel to F-44 (JP-5) or Commercial ASTM Type A-1 fuels.

2-234. Gravity Refueling.

1. Ground helicopter to fuel truck or other suitable ground.
2. Plug hose nozzle ground into the helicopter grounding jack, marked GROUND HERE, above refueling ports.
3. Removal fuel filler caps and refuel. Refer to Table 2-8 for fuel quantities.

2-235. Pressure Refueling.

1. Ground helicopter to fuel truck or other suitable ground.
2. Ground fuel dispenser nozzle to the helicopter grounding point marked GROUND HERE, above refueling ports.

CAUTION

When pressure refueling through the helicopter side port, ensure the FUEL MGT panel PROBE control switch is at the RETRACT position.

3. Connect fuel dispenser nozzle to pressure refueling adapter or aerial refueling probe, as required. The refueling probe adapter must be attached to ground refuel through the probe.

CAUTION

Damage to the fuel system could result if refueling hose pressure exceeds 55 psi during pressure refueling or 15 psi during closed circuit refueling.

If unisex vent valves are not open during pressure (aerial/close circuit) refueling of internal auxiliary tanks (No.1, No.2, No.3, and/or No.4), the tanks will be damaged from excessive internal pressure.

NOTE

The system is designed to restrict fuel flow to 300 gpm during pressure refueling at a nozzle pressure of 55 psi and 110 gpm at a nozzle pressure of 15 psi during closed circuit refueling.

To pressure refuel internal auxiliary and external tanks, when installed, the INT AUX switch must be at REFUEL, and MODE SEL and MAN EXT TANK switches must be at REFUEL, MANUAL and FLOW prior to removing power from the helicopter.

4. Start fuel flow from fuel dispenser and refuel helicopter.

CAUTION

If fuel is observed flowing from vent, discontinue refueling and make an entry on DA Form 2408-13-1.

5. Once fuel has reached the desired level, remove the fuel dispenser nozzle from the refueling adapter and cap pressure fueling adapter.

2-236. Aerial Refueling System.

The aerial refueling system consists of a refueling probe, probe management package, extend/refuel line, retract line, probe illumination light, and control switches. The system can be utilized to pressure refuel the main tanks; when installed, the system can also refuel the internal auxiliary and external fuel tanks. The extendable composite probe is located on the right side of the aircraft nose. A light on the lower right nose cowling (Figure 2-1) is provided to aide in night refueling operations. The refueling probe extension/retraction system is operated by fuel pressure from the dual transfer pumps and controlled through the probe management package by switches on the FUEL MGT panel. Probe control power is provided by the No.1 dc primary bus through a circuit breaker marked RFL PROBE. Power to the probe light is provided by the No.1 ac primary bus through circuit breaker marked LIGHTS FUEL PROBE. Both circuit breakers are on the copilot's circuit breaker panel. Refer to Chapter 4 for aerial refueling probe operation.

2-237. Fuel Sampling System.

Fuel sampling is done with a thumb-operated handpump (Figure 2-34) containing 5 feet of plastic tubing. The tubing is placed in a guide tube inside the fuel tank and is directed to the bottom of the tank. The handpump is stroked and fuel is drawn from the tank, with contaminants at the bottom. When sampling is completed, the tubing is emptied, rolled, and stowed with the pump on the gravity refueling door. When installed, fuel sampling of the internal auxiliary and external fuel tanks are done in the same manner. An alternate method of draining the fuel is from the sump drains.

2-238. Ground Air Source Requirements.

Refer to Chapter 5 for limitations.

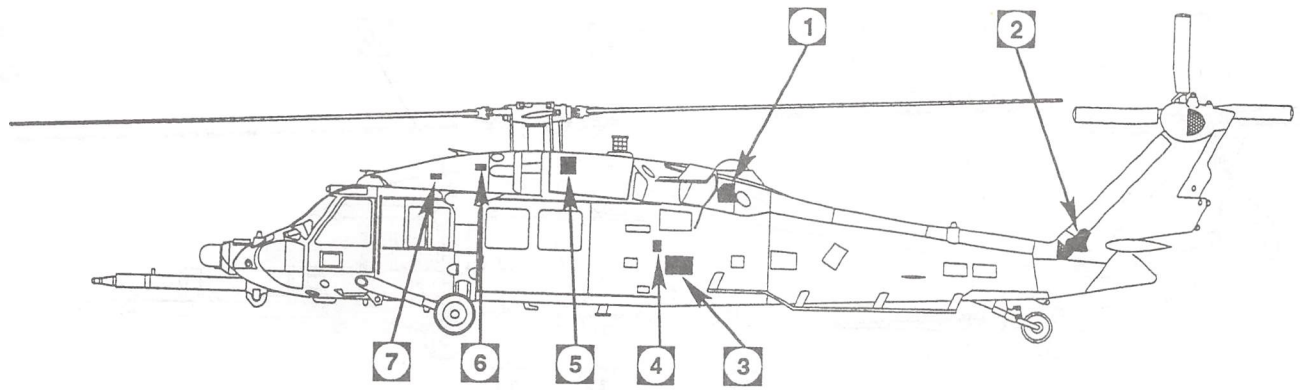

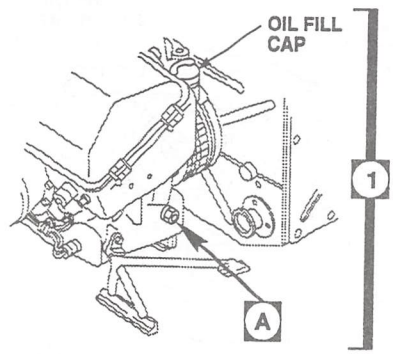

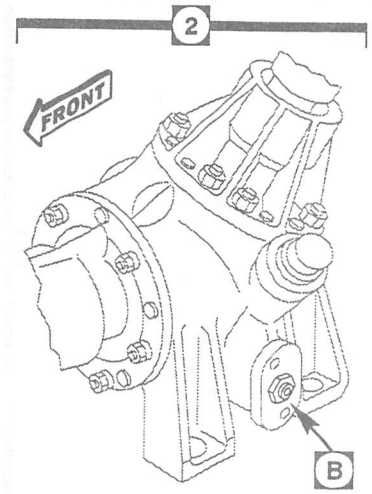

INTERMEDIATE GEAR BOX

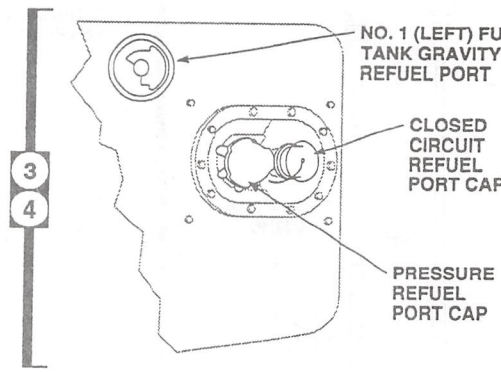

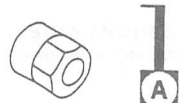

FILL TO SPILL PLUG

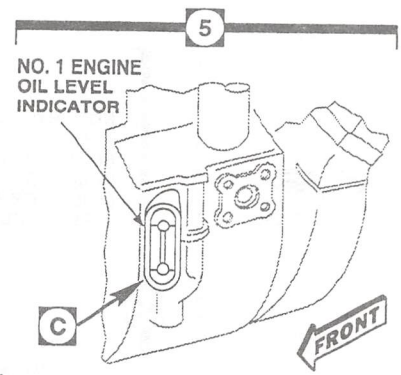

NO. 1 ENGINE LEFT SIDE
(SAME FOR NO. 1 AND NO. 2 ENGINES)

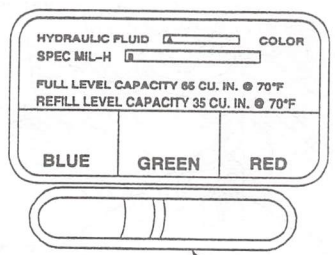

NO. 1 NO. 2 AND BACKUP HYDRAULIC PUMP MODULES LEVEL INDICATOR

6
7

NOTE

SOME HELICOPTERS MAY HAVE COLORS AS RED FOR REFILL, GREEN FOR FULL, AND RED FOR EXPANSION AS VIEWED FROM HELICOPTER RIGHT SIDE

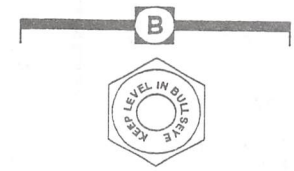

OIL LEVEL INDICATOR

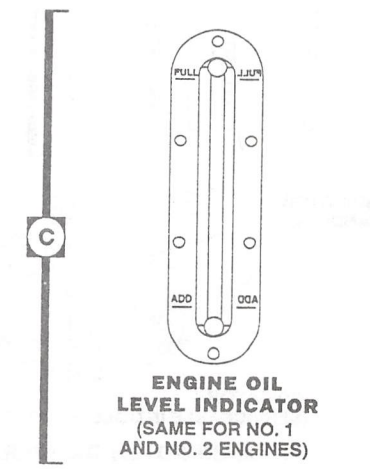

ENGINE OIL LEVEL INDICATOR
(SAME FOR NO. 1 AND NO. 2 ENGINES)

1. AUXILIARY POWER UNIT
2. INTERMEDIATE GEAR BOX OIL LEVEL INDICATOR
3. CLOSED CIRCUIT AND PRESSURE REFUELING PORTS
4. NO. 1 (LEFT) FUEL TANK GRAVITY REFUEL PORT
5. NO. 1 ENGINE OIL LEVEL INDICATOR
6. NO. 1 HYDRAULIC PUMP MODULE
7. BACKUP HYDRAULIC PUMP MODULE

AK0030_1
SA

Figure 2-34. Servicing Diagram (Sheet 1 of 3)

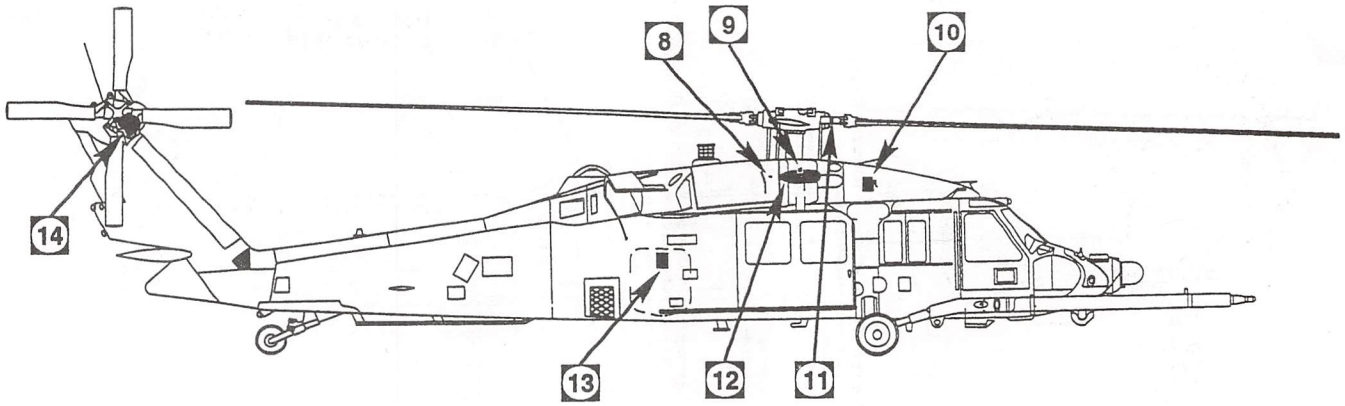

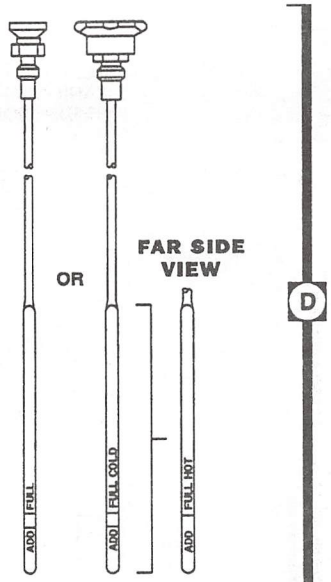

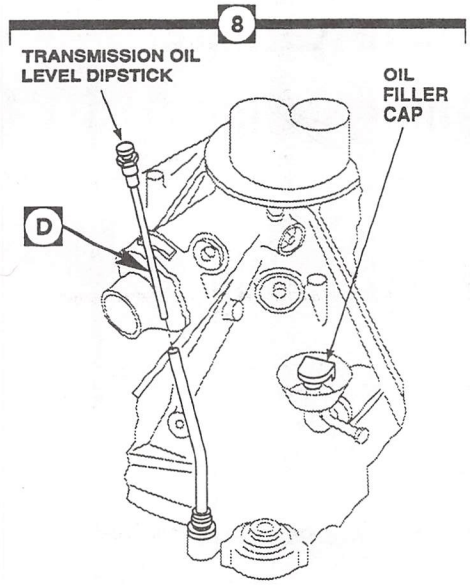

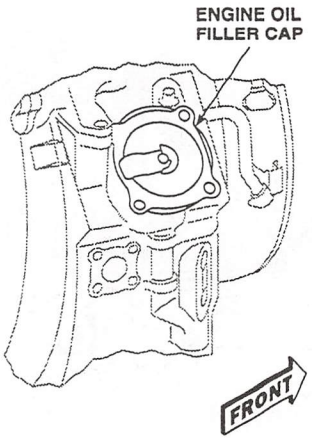

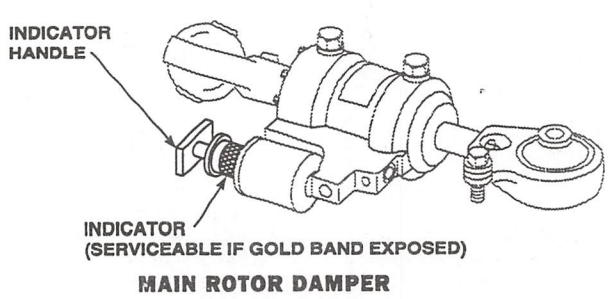

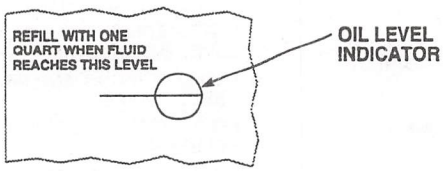

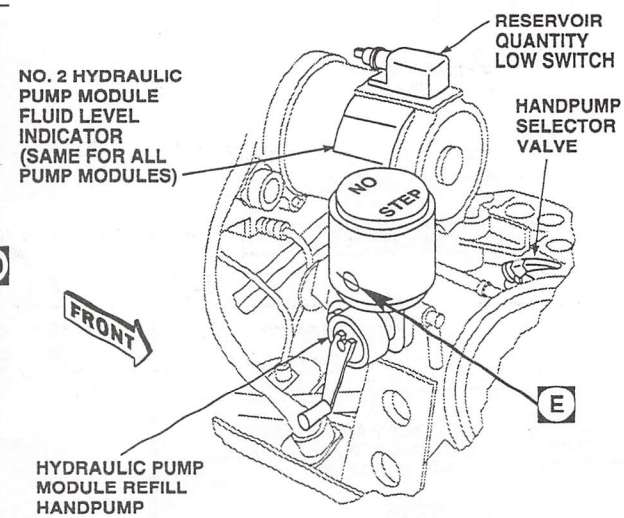

8. MAIN TRANSMISSION OIL FILLER PORT AND DIP STICK
9. NO. 2 ENGINE OIL FILLER PORT AND SIGHT GAGE
10. NO. 2 HYDRAULIC PUMP MODULE AND PUMP MODULE REFILL HANDPUMP
11. MAIN ROTOR DAMPER CHARGE INDICATOR
12. RESCUE HOIST
13. NO. 2 (RIGHT) FUEL TANK GRAVITY REFUEL PORT
14. TAIL ROTOR GEAR BOX OIL LEVEL SIGHT GAGE

AK0030_2 SA

Figure 2-34. Servicing Diagram (Sheet 2 of 3)

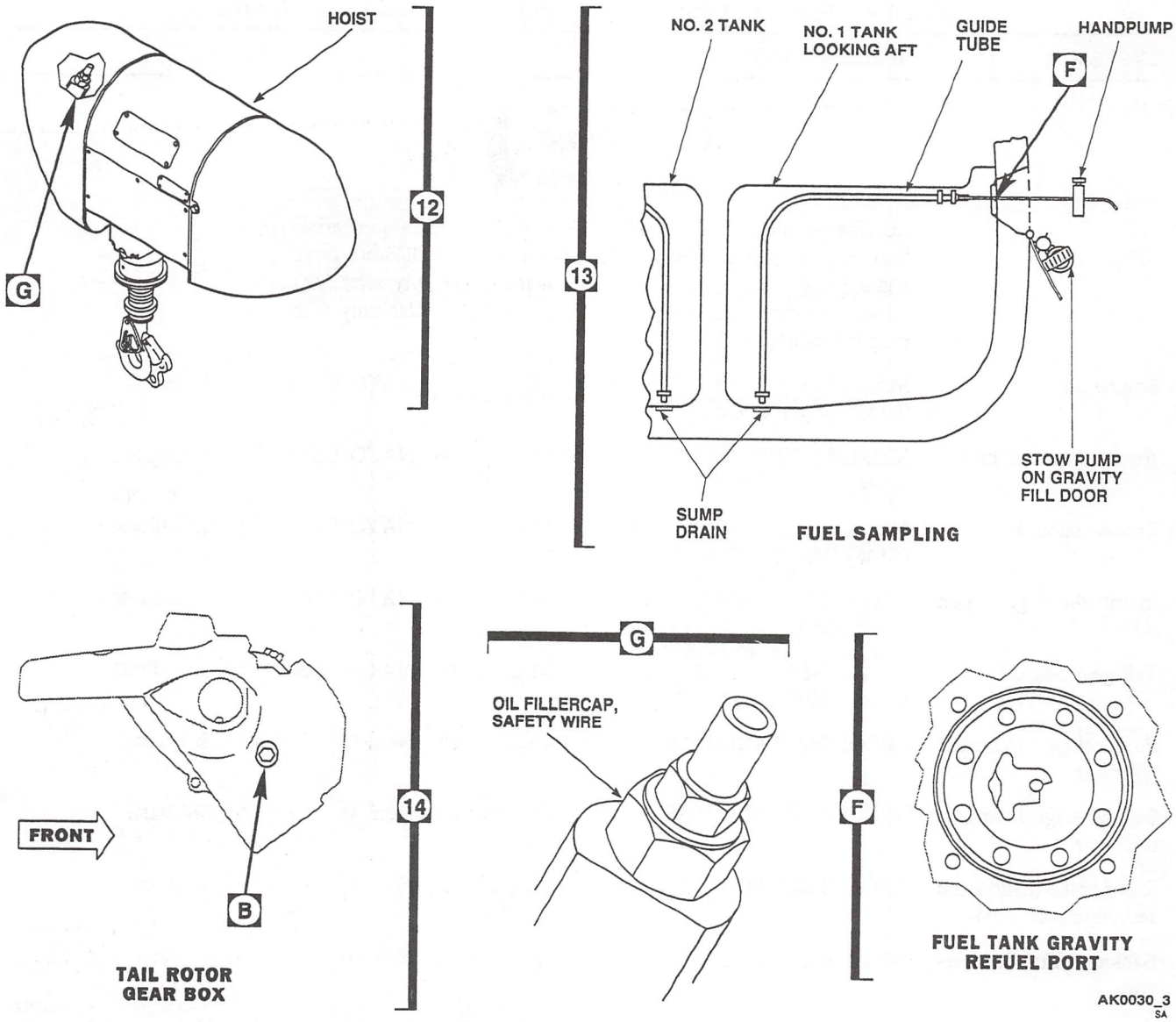

Figure 2-34. Servicing Diagram (Sheet 3 of 3)

Table 2-8. Fuel and Lubricants, Specifications, and Capacities

SYSTEM	SPECIFICATION	CAPACITY
Fuel	Primary: Grade JP-4 (NATO Code F-40) (Note 6) Alternate: Grade JP-5 (NATO Code F-44) (Notes 1 and 6) Grade JP-8 (NATO Code F-34) (Note 1)	Main Tanks usable U. S. Gallons of fuel are: 359.7 gravity, 358.7 pressure, and 355.7 closed circuit. External Tank Gravity Refueling: 230 U. S. Gallons each tank. Internal Auxiliary tank: 170 U. S. Gallons each tank

Table 2-8. Fuel and Lubricants, Specifications, and Capacities (Cont)

SYSTEM	SPECIFICATION	CAPACITY
	WARNING Lubricating oils MIL-L-23699 and MIL-L-7808 contain materials hazardous to health. They produce paralysis if swallowed. Long contact may irritate the skin. Wash hands thoroughly after handling. Oils may burn if exposed to heat or flames. Use only with proper ventilation.	
Engine oil	MIL-L-23699 (NATO Code 0-156) MIL-L-7808 (NATO Code 0-148) (Notes 2 and 3)	7 U. S. Quarts
Auxiliary power unit	MIL-L-23699 (NATO Code 0-156) MIL-L-7808 (NATO Code 0-148) (Notes 2 and 3)	3 U. S. Quarts
Transmission oil	MIL-L-23699 (NATO Code 0-156) MIL-L-7808 (NATO Code 0-148) DOD-L-85734 (Note 3)	7 U. S. Gallons
Intermediate gear box oil	MIL-L-23699 (NATO Code 0-156) MIL-L-7808 (NATO Code 0-148) DOD-L-85734 (Note 3)	2.38 U. S. Pints
Tail gear box oil	MIL-L-23699 (NATO Code 0-156) MIL-L-7808 (NATO Code 0-148) DOD-L-85734 (Note 3)	2.75 U. S. Pints
First stage hydraulic reservoir	MIL-H-83282 MIL-H-5606 (NATO Code H-515) (Note 4)	1 U. S. Quart
Second stage hydraulic reservoir	MIL-H-83282 MIL-H-5606 (NATO Code H-515) (Note 4)	1 U. S. Quart
Rotor brake (handpump servicing reservoir)	MIL-H-83282 MIL-H-5606 (NATO Code H-515) (Note 4)	1 U. S. Quart
Backup hydraulic reservoir	MIL-H-83282 MIL-H-5606 (NATO Code H-515) (Note 4)	1 U. S. Quart
Rescue Hoist	MIL-23699B-2 (Mobil ATF DEXRON Type A) (Note 5)	11.5 U. S. Fluid Ounces
	NOTE Commercial oils listed below are approved alternates for engines and gear boxes except as indicated.	
	APPROVED COMMERCIAL OILS	
SOURCE	PRIMARY OR STANDARD OIL	ALTERNATE OIL
U. S. Military Oil	MIL-L-23699	MIL-L-7808
NATO Code No.	0-156	0-148

Table 2-8. Fuel and Lubricants, Specifications, and Capacities (Cont)

SYSTEM	SPECIFICATION	CAPACITY
COMMERCIAL OIL	TYPE II	TYPE I
Shell Oil Company	Aeroshell Turbine Oil 500	
Castrol Ltd. (Not qualified for use in gear boxes)	Castrol 205	Castrol 325
Exxon Co.	Exxon Turbo Oil 2380	Exxon Turbo Oil 2389
Mobil Oil Co.	Mobil Jet II	
Stauffer Chemical Co.	Stauffer Jet II	

NOTES:

1. When starting in ambient temperatures below -34°C (-29°F), do not use JP-5 or JP-8.
2. When starting in ambient temperatures of -34°C (-29°F) or below, lubricating oil MIL-L-7808 must be used. It is not advisable to mix MIL-L-23699 oil with MIL-L-7808 oil.
3. If the type oil being used is not available, another authorized type oil may be added. When one type oil is mixed with another, it is not necessary to drain the system and refill with one type oil. No mixing is allowed for cold temperature operation.
4. For operation below -34°C (-29°F), MIL-H-5606 (NATO Code H-515) shall be used. Mixing MIL-H-5606 with MIL-H-83282 degrades fire-resistant qualities of MIL-H-83282.
5. Below -40°C (-40°F), Shell DONAXT-1 must be used.
6. Fuel settling time for jet (JP) fuel is 1 hour per foot depth of fuel. Allow the fuel to settle for the prescribed period before any samples are taken (about 4 hours for proper settling).

Table 2-9. Approved Fuels

SOURCE	PRIMARY/STANDARD FUEL	ALTERNATE FUELS	
U. S. Military Fuel	JP-4	JP-5	JP-8
NATO Code No.	F-40	F-44	F-34
COMMERCIAL FUEL (ASTM-D-1655)	JET B	JET A	JET A-1
American Oil Co.	American JP-4	American Type A	
Atlantic Richfield Richfield Div.	Arcojet B	Arcojet A Richfield A	Arcojet A-1 Richfield A-1
B. P. Trading	B. P. A. T. G		B. P. A. T. K.
Caltex Petroleum Corp.	Caltex Jet B		Caltex Jet A-1
City Service Co.		CITCO A	
Continental Oil Co.	Conoco JP-4	Conoco Jet-50	Conoco Jet-60
Exxon Co. U. S. A.	Exxon Turbo Fuel B	Exxon A	Exxon A-1

Table 2-9. Approved Fuels (Cont)

SOURCE	PRIMARY/STANDARD FUEL	ALTERNATE FUELS	
Gulf Oil	Gulf Jet B	Gulf Jet A	Gulf Jet A-1
Mobil Oil	Mobil Jet B	Mobil Jet A	Mobil Jet A-1
Phillips Petroleum	Philjet JP-4	Philjet A-50	
Shell Oil	Aeroshell JP-4	Aeroshell 640	Aeroshell 650
Sinclair		Superjet A	Superjet A-1
Standard Oil Co.		Jet A Kerosene	Jet A-1 Kerosene
Chevron	Chevron B	Chevron A-50	Chevron A-1
Texaco	Texaco Avjet B	Avjet A	Avjet A-1
Union Oil	Union JP-4	76 Turbine Fuel	
INTERNATIONAL FUEL	NATO F-40	NATO F-44	NATO F-34
Belgium	BA-PF-2B		
Canada	3GP-22F	3-6P-24C	
Denmark	JP-4 MIL-T-5624		
France	Air 3407A		
Germany	VTL-9130-006	UTL-9130-007	
		UTL-9130-010	
Greece	JP-4 MIL-T-5624		
Italy	AA-M-C-1421	AMC-143	
Netherland	JP-4 MIL-T-5624	D. Eng RD 2493	
Norway	JP-4 MIL-T-5624		
Portugal	JP-4 MIL-T-5624		
Turkey	JP-4 MIL-T-5624		
United Kingdom (Britain)	D. Eng RD 2454	D. Eng RD 2498	

NOTE: Commercial fuels are commonly made to conform to American Society for Testing and Materials (ASTM) Specification D 1655. The ASTM fuel specification does not contain anti-icing additives unless specified. Icing inhibitor conforming to MIL-L-27686 (Commercial name PRIST) shall be added to commercial and NATO fuels, not containing an icing inhibitor, during refueling operations, regardless of ambient temperatures. Adding PRIST during refueling operation shall be done using accepted commercial mixing procedures. The additive provides anti-icing protection and also functions as a biocide to kill microbial growths in helicopter fuel systems.

2-239. Engine Oil System Servicing.

CAUTION

The helicopter must be level to get accurate oil tank readings. When the helicopter is parked on a slope, the downslope engine will read higher oil level than actual, and the upslope engine will read lower.

The engine oil tank (Figure 2-34) is within the main frame. When the oil level reaches the ADD mark, oil should be added to bring the level to the full mark on the sight gage. When the oil reaches the ADD mark, 2 quarts should be added to bring the level to the full mark on the sight gage. Oil shall be added in 1-quart units. Wait at least 10

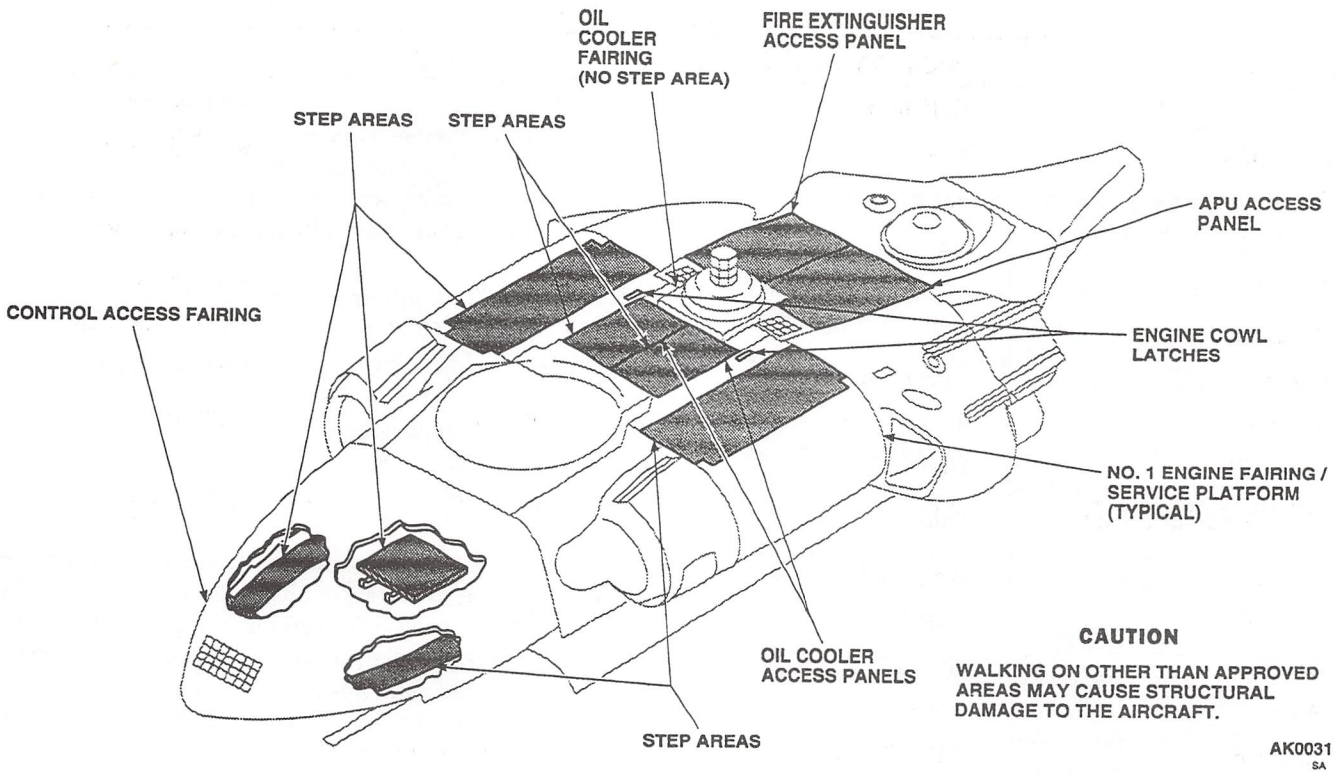

Figure 2-35. Servicing Platform and Fairings

minutes after engine shutdown before checking engine oil level. Before adding oil, determine whether system contains MIL-L-7808 oil or MIL-L-23699 oil. If flights of over 6 hours are made, engine oil level must be at the full line of sight glass before flight.

2-240. APU Oil System Servicing.

The APU oil supply is in the APU gear box oil sump. The sump filler/oil dipstick port (Figure 2-34), is on the left side of the gear box housing.

2-241. Handpump Reservoir Servicing.

CAUTION

Do not allow reservoir level to fall below refill line.

Servicing of the refill handpump is done when fluid level decreases to the refill line on the fluid level sight gage, on the side of the pump tank. When fluid level decreases to the refill line, 1 quart of hydraulic fluid can be poured into the reservoir after removing the refill cap. Handpump reservoir level should be replenished only in 1 quart units. In addition to servicing the hydraulic system reservoirs, the handpump reservoir serves as the rotor brake system reservoir.

2-242. Hydraulic Systems Servicing.

Reservoirs (Figure 2-34) for the hydraulic systems are on the hydraulic pump modules. Fluid level sight gages are visible on the side of each pump. All hydraulic pump reservoir capacities are 1 U. S. quart to the blue (full) mark. When the indicator reaches the red area (refill) point, 2/3 of a pint is required to return the indicator to the green mark. When the fluid level decreases to the refill line, service is necessary to avoid allowing air into the rotor brake hydraulic system. The fluid level indication is the 1/8 inch wide gold band at the outboard edge of the level piston. To refill the reservoirs, the fluid is supplied from the manual handpump. After flight, fluid in hydraulic systems will be hot. Piston movement of up to 3/8 inch into the blue (overfill) zone is acceptable. When piston is beyond this limit, bleed off enough fluid to bring piston back to 3/8 inch above fill limit. To replenish the pump reservoir fluid, do the following:

1. Unscrew handpump lid and pour in clean hydraulic fluid, MIL-H-83282, until pump is full. Make sure you can always see oil in pump reservoir window while servicing, so not to pump air into pump module's reservoir.

2. Make sure pump cover is clean, then screw lid on tight.

3. Turn selector valve to desired reservoir to be filled. OUT 1 is left pump module, OUT 2 is right pump module, OUT 3 is backup pump module, and OUT 4 is rotor brake system.

4. While holding selector valve handle down, crank pump handle on handpump clockwise and fill desired hydraulic pump module until forward end of piston in reservoir window is at forward end of green decal on reservoir housing. At the same time, push in and turn bleed valve, and bleed air from pump module. Release button when air-free oil shows.

5. Check that reservoirs stay full (forward end of piston at forward end of green decal), with fluid at ambient temperature 1 hour after flight.

6. Make sure area remains clean during procedure.

7. Stow selector valve handle in OUT 4 position.

8. Turn on electrical power.

9. Upon applying power to the aircraft after servicing the hydraulic system, check to ensure there is not a HYD RSVR 1 LO, HYD RSVR 2 LO, or BKUP RSVR LO caution message on the MFDs.

2-243. Main Transmission Oil System Servicing.

The transmission oil supply is in the sump case with the filler port and dipstick gauge (Figure 2-34), on the right rear of the main module. When filling is required, oil is poured through the filler tube on the main module case, and oil level is checked by a dipstick marked FULL and ADD, or FULL COLD and ADD on one side of the dipstick and FULL HOT and ADD on the other side. A valid check of oil level may be made as follows:

a. Single scale dipstick is for checking cold oil levels. Wait at least 2 hours after shutdown to check oil. If oil level must be checked when hot (immediately to 1/2 hour after shutdown), oil level will read about 1/2 inch low (halfway between full and add mark or 1/2 inch below add mark).

b. Dual scale dipstick is for checking cold or hot oil levels. Use appropriate scale when checking oil level. Read hot side of dipstick when checking hot oil (immediately to 1/2 hour after shutdown), or cold side of dipstick when checking cold oil (at least 2 hours after shutdown).

2-244. Tail and Intermediate Gear Box Servicing.

The intermediate gear box oil level sight gage (Figure 2-34) is on the left side of the gear box. The tail gear box oil level sight gauge is on the right side.

2-245. Parking.

The methods used to secure the helicopter for temporary periods of time will vary with the local commands. The minimum requirements for parking are: gust lock engaged and wheel brakes set, tailwheel locked, and wheels properly chocked. Engine inlet covers, exhaust covers, and pitot covers should be installed. When required, the ignition system and the doors and window should be locked.

2-246. Protective Covers and Plugs.

The covers and plugs (Figure 2-36) protect vital areas from grit, snow, and water. The protected areas are engine air inlet/accessory bay, HIRSS intake, HIRSS exhaust and APU exhausts, pitot tubes, and IRCM transmitter and APU air inlet and main transmission oil cooler exhaust. Covers and plugs should be installed whenever the helicopter is to be on the ground for an extended period of time. Each cover may be installed independently of the others.

2-247. Mooring.

WARNING

If it is necessary to engage the rotor while the helicopter is tied down, it is mandatory that the tiedown chains be attached with slack, thus relieving any tension in the chains. Engagement of the rotor while the helicopter is tied down tightly could result in ground resonance.

Mooring fittings are installed at four points on the helicopter (Figure 2-36). Two fittings are at the front of the fuselage, one above each main landing gear strut, and two

at the rear, one attached to each side of the aft transition section. These fittings are used to tie down the helicopter when parked, and wind conditions require it.

2-248. Mooring Instructions.

Refer to TM 55-1520-237-23-4 for mooring instructions.

2-249. Main Rotor Tiedown.

Tiedown of the main rotor should be done when the helicopter will be parked and secured, or when actual or projected wind conditions are 45 knots and above. To tiedown main rotor blades, do this:

1. Turn rotor head and position a blade over centerline of helicopter. Install tiedown fitting into receiver while pulling down on lock release cable. Release cable when fitting is installed in blade receiver.
2. Uncoil tiedown rope.
3. Repeat steps 1. and 2. for each remaining blade.
4. Turn blade to about 45° angle to centerline of helicopter and engage gust lock.

CAUTION

Do not deflect main rotor blade tips more than 6 inches below normal droop position when attaching tiedowns. Do not tie down below normal droop position.

5. Attach tiedown ropes to helicopter as shown in Figure 2-36. To release tiedown fitting, pull down on lock release cable and remove fitting from blade.

2-250. Shipboard Tiedown Procedure.

NOTE

Slew stabilator to zero (0) for shipboard tiedown.

Shipboard tiedown will be in accordance with the applicable procedures established for that ship/vessel.

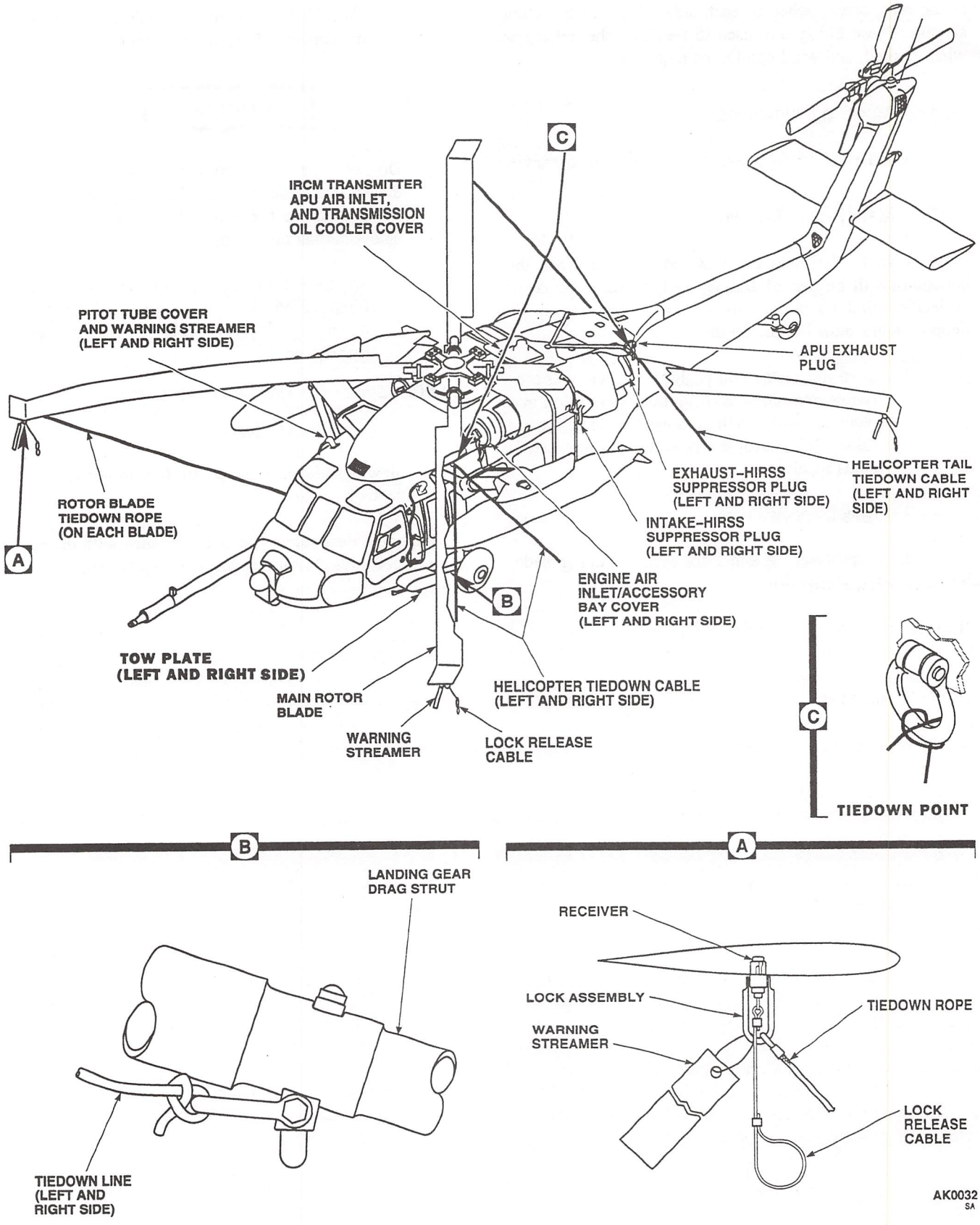

Figure 2-36. Mooring

CHAPTER 3
AVIONICS

Section I GENERAL

3-1. Avionics General Description.

The avionics system consists of a mission management subsystem, a navigation subsystem, a communication subsystem, aircraft survivability equipment, and mission aid equipment, as shown in Figure 3-1 and listed in Table 3-1, and nonintegrated avionics subsystems as listed in Table 3-2. The mission management subsystem combines the functions of the avionics components into an integrated operational system. The antenna arrangement is shown in Figure 3-6 and each antenna is described with its avionics subsystem.

3-2. Avionics Systems.

The avionics systems consist of the mission management system, the navigation system, the communication system, the aircraft survivability equipment (ASE), and the mission aid equipment.

3-3. Mission Management Subsystem (MMS).

Controls and displays are integrated through the mission management equipment which is comprised of: four multifunction displays (MFDs), two control display units (CDUs), pilot and copilot display processors (DP-P and DP-CP), two mission processors (MP1 and MP2), two remote terminal units (RTU1 and RTU2), and two dual redundant data buses.

a. MFD/CDU General. The MFDs provide a display area in the center of the MFD and a legend area around the display area. The display area shows graphics or text. The graphics may represent flight instruments, engine and power train instruments, or sensor/map video. The legend area of the MFD shows text which identifies the function of each key located on the bezel of the MFD, or the currently selected subsystem mode of operation. Most related functions are grouped on the same MFD page. The key legends change as other MFD pages are selected. When pressed, function keys can either select a function, mode of operation, or gain access to another MFD page. When a function is selected with an MFD key, an asterisk appears next to the key legend and the key legend appears in white letters (on color MFDs) to indicate that it is on or active. Only one of the two MFDs at a crew station can be self-tested at a time.

b. MFD/CDU Interrelationships. The CDU pages work in conjunction with MFD pages. When an MFD page is selected, the associated CDU page shall appear. CDUs serve two purposes: to directly support the MFD page (e.g.: to enter a frequency for a radio channel, to change an altitude hold setting on the flight director, etc.), and to provide direct access to a subsystem's controls through CDU-only pages. When an MFD page requires alphanumeric data, the appropriate CDU page will appear to support it. When no alphanumeric entries are needed in support of an MFD, a system default page will appear. A CDU display may consist of one or more pages. As MFD pages are selected, the CDU pages will change appropriately, to allow entry of data in support of the MFD. CDU pages allow only one data line to be modified at a time. The MFD/CDU pages are organized into five major functional sets/control layers: horizontal situation display (HSD), vertical situation display (VSD), hover (HVR), helicopter engine and power train instrument (INST) display, and systems (SYST).

c. MFD/CDU pages within a control layer may only be reached from other pages in that control layer. The control layer names correspond to the names of the keys used to access them (e.g., the SYST key must be pressed to get out of the VSD, HSD, HVR, or INST control layers and get into the SYST control layer). To get to pages located in another control layer, the key corresponding to that control layer must be pressed first. The VSD, HSD, HVR, INST, and SYST control layers are discussed in paragraph 3-14.

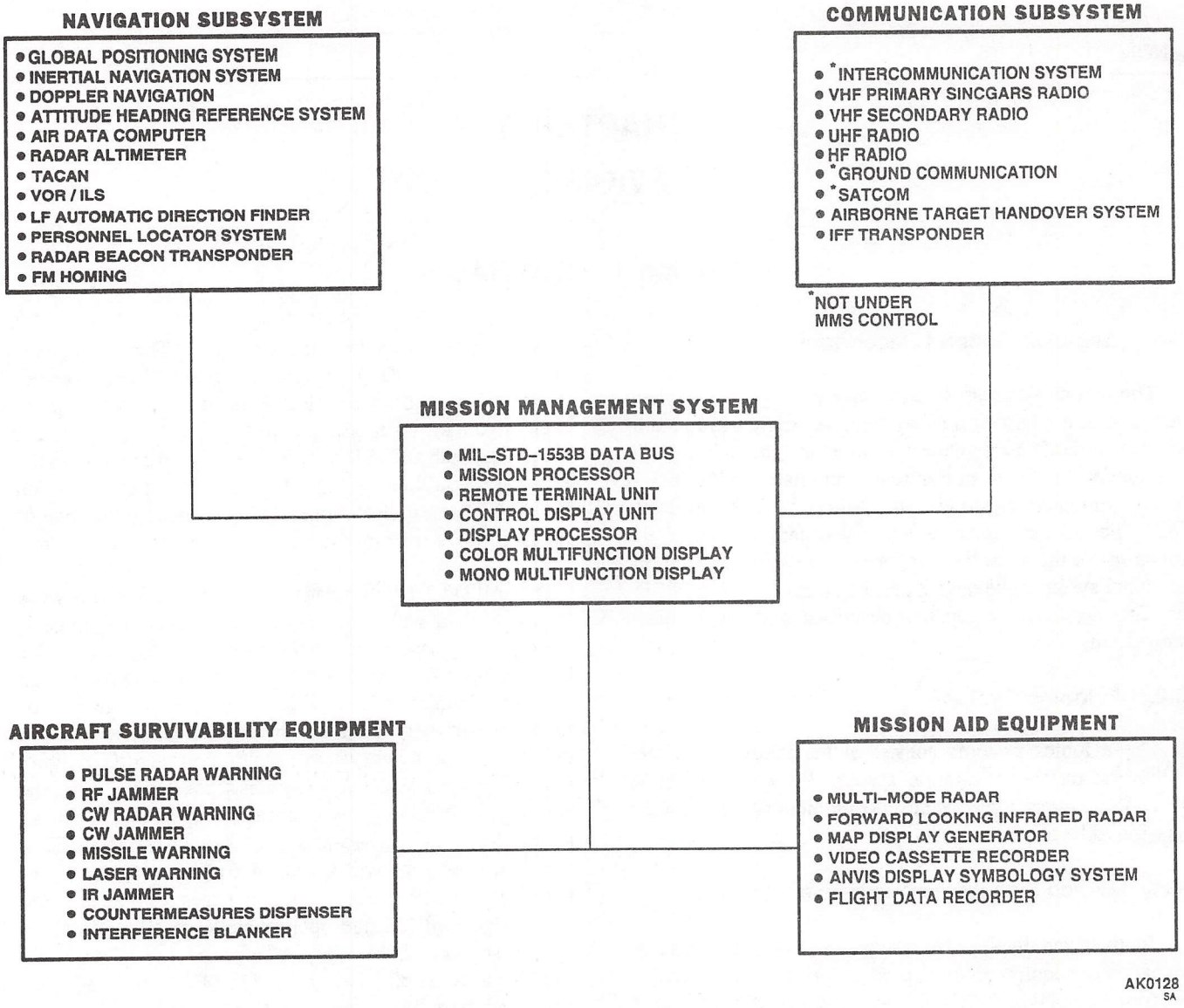

Figure 3-1. Avionics Systems

Table 3-1. Integrated Avionics Equipment

NOMENCLATURE	DESCRIPTION
	MISSION MANAGEMENT SUBSYSTEM
1553B Data Bus	A pair of multiplexed data buses, under mission processor control, which transfer digital data between all 1553B equipped line replaceable units (LRUs).
Mission Processors (2)	Primary Avionics System control. Computes navigation data, provides subsystem control, status, and testing.
Remote Terminal Units (RTU) (2)	Provide interface for subsystems and helicopter applicable systems (engine, transmission, etc.) that cannot be connected directly to the 1553B data bus.

Table 3-1. Integrated Avionics Equipment (Cont)

NOMENCLATURE	DESCRIPTION
Color Multi-Function Displays (MFD) (2)	Display flight instruments data, engine data, and systems control data.
Monochrome Multi-Function Displays (MFD) (2)	Display flight instruments data, engine data, and systems control data.
Control Display Units (CDU) (2)	Provide data entry and subsystem control to support applicable MFD, or CDU-only applications.
Display Processors (2)	Provides pilot and copilot MFD displays with raster and stroke video, and interface to MFD bezel keys.
	NAVIGATION SUBSYSTEM
Global Positioning System (GPS) AN/ASN-149(V)2	Provides helicopter position, speed, time, and altitude (if selected) to navigation system.
Inertial Navigation Unit (INU) AN/ASN-141	Provides position, velocity, acceleration, attitude, and heading information to the navigation system, flight instruments, and AFCS.
Doppler Radar AN/ASN-137	Provides velocity information to the navigation system and AFCS.
Attitude-Heading Reference System (AHRS) AN/ASN-145	Provides position, velocity, acceleration, attitude, and heading information to the navigation system, flight instruments, and AFCS.
ML-1 Flux Valve	Provides magnetic heading information to the AHRS.
Air Data Computer (ADC) 2800A	Provides pressure altitude, true airspeed, calibrated airspeed, and air temperature for use with the navigation system and flight instruments.
Radar Altimeter AN/APN-209(H)	Provides helicopter absolute altitude to navigation system, flight display, AN/APN-209(H) indicator, MMR, and AFCS.
TACAN Receiver/ Transmitter AN/ARN-118	Provides bearing and distance information to the navigation system and flight display.
VOR/ILS System AN/ARN-123	Provides VOR and ILS (localizer and glideslope) reception and navigation information to the navigation system and flight display.
Automatic Direction Finder Set AN/ARN-149	Automatic direction finding signal reception from 100 to 2199.5 KHz.
Personnel Locator System (PLS) AN/ARS-6(V)3	Identifies the bearing to downed aircrewman equipped with the AN/PRC-90. Range is also provided when downed aircrewman is equipped with AN/PRC-112. Also provides UHF-AM communications.
Radar Beacon Transponder APX-105	Responds to interrogations from refueling aircraft; thereby, allows refueling aircraft to determine range and bearing. Used in conjunction with a cooperating AN/APN-59 radar.
FM Homing System	Displays directional cues for locating grounded personnel with FM transmitters.
	COMMUNICATION SUBSYSTEM
SINCGARS Radio Set AN/ ARC-201(V)	Provides two-way FM communication of voice and data in the 30.000 to 87.975 MHz frequency range.

Table 3-1. Integrated Avionics Equipment (Cont)

NOMENCLATURE	DESCRIPTION
VHF Power Amplifier AM-7189A/ARC	Amplifies the SINCGARS transmitter output power up to 56 watts.
VHF AM-FM Radio Set AN/ARC-186	Provides two-way FM communications of voice and data in the 30.000 to 87.975 MHz frequency range. Two-way AM communications of voice and data in the 116.000 to 151.975 MHz frequency range. AM voice and data reception from 108.000 to 115.975.
UHF-AM HAVE QUICK Radio Set AN/ARC-164	Provides two-way AM communications of voice and data in the 225.000 to 399.975 MHz frequency range.
Voice Security System TSEC/KY-58	Provides secure voice and data communications for the VHF, UHF, and SATCOM radio sets.
HF Radio Set AN/ARC-199	Provides two-way AM, upper frequency sideband (USB), and lower frequency sideband (LSB) communications of voice in the 2.000 to 29.9999 MHz frequency range.
Voice Security RCU and Processor TSEC/KY-75	Provides secure voice and data communications applicable for the HF Radio Set.
Airborne Target Handover System (ATHS) CP-1516/ASQ	Provides digital message transmission and reception capability. May be used with the SINCGARS, VHF, UHF (except in the HAVE QUICK mode), and SATCOM Radios.
IFF Transponder Set AN/APX-100	Provides identification to suitably equipped ground/air radar station. When used with the KIT-1C, provides mode 4 (IFF) operation.
IFF Mode 4 encoder/decoder Kit-1C	Provides mode 4 codes, when a valid code has been loaded, for use with the Transponder Set AN/APX-100.
Voice Warning System	Provides verbal notification of critical warnings through the pilot's and copilot's ICS headsets.
	AIRCRAFT SURVIVABILITY EQUIPMENT
Pulse Radar Warning Receiver and Display AN/APR-39A(V)1	Identifies hostile pulse fire control radars. Direction to radar is shown on the AN/APR-39A(V)1 display. Displays detection of air intercept (AI) and surface-to-air missile (SAM), and displays the quadrant in which missile plume and laser emissions are detected.
Pulse Jammer AN/ALQ-136(V)2	Provides helicopter with protection by jamming hostile pulse fire control radar.
CW Radar Warning Receiver AN/APR-44(V)3	Identifies hostile airborne intercept (AI) and SAM CW fire control radars. Azimuth to radar is shown on the AN/APR-39(V)1 display.
CW Jammer AN/ALQ-162(V)2	Provides helicopter with protection by jamming hostile CW fire control radar.
Missile Warning System AN/AAR-47	Detects missile plume and change in size to locate and identify incoming missiles. The direction of approach is plotted on the radar warning indicator.
Laser Warning System AN/AVR-2	Alerts pilot that the helicopter has been targeted by a laser. The quadrant of the laser, relative to the helicopter, is displayed on the radar warning indicator.
Infrared Jammer AN/ALQ-144A	Provides helicopter with protection from infrared guided missiles.

Table 3-1. Integrated Avionics Equipment (Cont)

NOMENCLATURE	DESCRIPTION
Countermeasures Dispenser M-130	Dispenses chaff or flares.
Interference Blanker Unit (IBU)	Prevents interference on receivers caused by helicopter emitters operating on similar frequencies.
	MISSION AID EQUIPMENT
Multi-Mode Radar (MMR) AN/APQ-174	Provides radar video to the MFD and radar navigation data to the navigation system. Can also be used for target ranging and updating of navigation data.
Forward Looking Infrared (FLIR) AN/AAQ-16B	Provides infrared video to the MFD displays to aid navigation. May be used to update navigation system.
Map Display Generator	Provides memory storage for mission management subsystem data, generates map or photo displays on the MFDs, provides interface for data transfer.
Video Cassette Recorder (VCR)	Records FLIR video. One cassette provides up to 120 minutes of recording.
ANVIS Display Symbology System (ADSS)	Provides flight symbology to be displayed on the pilot's night vision goggles.
Flight Data Recorder	Records helicopter operating data from the 1553B data buses. Has a 25-hour recording capacity.

d. Mission Management Subsystem Software. The mission management software allows pre-mission planning for the following functions: helicopter performance (fuel management, CG computations, maximum range/endurance airspeed), flight plans, communication plans, NRP tables, ATHS menus, checklists, HSD/VSD declutter settings, and ADS declutter tables. Comprehensive pre-mission planning can be done before takeoff by using a desktop computer mission planning station. Mission planning may also be accomplished using the MFD/CDU. When all pre-mission flight planning data has been entered, the mission management system will assist the pilot in predicting (for the current flight leg or series of legs): fuel remaining, estimated time enroute, estimated time of arrival, current and projected fuel use, current and projected fuel remaining, gross weight, torque available, torque required, maximum range in knots and nautical miles, and maximum endurance in knots and time.

e. Avionics Management System . The avionic subsystems and equipment status summary are controlled and tested through the avionics management system by the mission processor software. When ac power is first applied, the avionics management system software powers up all IASS equipment, except the MFDs, and begins performing continuous built-in-tests (CBIT). The CBIT detects faults in the subsystems' current mode of operation. CBIT runs continuously (except during IBIT, OP RDY, initialization, or power up/down) from the time external power is applied, or helicopter power is available, until the helicopter is shut down and/or external power is removed. In-depth maintenance tests are also available in the form of initiated built-in-tests (IBIT) and the operations ready tests (OP RDY). These maintenance tests must be manually initiated. IBIT tests all functions on the subsystem, as selected on the MFD equipment status page, when key R3 (TEST) is pressed. OP RDY is initiated from the MFD equipment status summary pages. OP RDY tests all avionics subsystems and helicopter sensors. When a fault is detected, the avionics management system software will update the equipment status pages, equipment status summary pages, and display warning/caution/advisory message(s) on the MFD. The avionics management system also activates master cautions and the voice warning system.

Table 3-2. Non-Integrated Avionics Equipment

NOMENCLATURE	DESCRIPTION
Intercommunications System Control Unit C-11746(V)AIC	Provides intercommunications between crewmembers and control of navigation and communication radios through an RTU interface to the IASS.
Ground Communications Radio Set SABER II	Provides FM voice communications in the frequency range of 136.000 to 174.000 MHz.
SATCOM UHF Radio Set LST-5C	Provides two-way AM or FM voice communications over satellite or in line-of-sight with ground based stations. Operates in the frequency range of 225 to 400 MHz.
Emergency Locator Transmitter EBC-302SHM	Transmits a signal to aid in the location of a downed aircrew. Operates on 121.5 and 243.00 MHz.

Table 3-3. Data Bus Channel Interfaces

CHANNEL 0 (Copilot)	CHANNEL 1 (Pilot)
RTU #1	RTU #2
VHF Radio	SINCGARS Radio
Flight Data Recorder	Flight Data Recorder
Mission Processor 1 AP-102	Mission Processor 1 AP-102
Mission Processor 2 AP-102	Mission Processor 2 AP-102
HF Radio	UHF/HQI and HQII Radio
Doppler Radar AN/ASN-137	Global Positioning System AN/ASN-149(V)2
Inertial Navigation Unit (INU) AN/ASN-141	FLIR AN/AAQ-16B
Map Display Generator	IFF Transponder APX-100
Multi-Mode Radar (MMR) APQ-174	ADF Radio
Display Processor 1	Display Processor 2
Personnel Location system ARS-6(V)3	Airborne Target Handover System (ATHS) CP-1516/ASQ
	Attitude Heading Reference System (AHRS) AN/ASN-145

3-4. Data Bus.

The IASS acquires data and controls subsystems through two data bus channels (channel 0 and channel 1) and two RTUs. Data processing is accomplished by either of the two mission processors. The data channels are controlled by only one MP at a time. The MP controlling the data channels is the prime MP and is identified as such on page 1 of the equipment status table by the letter P. The other MP will continue to process data, but will not control the data channels or subsystems unless the prime MP fails to operate properly. Each data channel is comprised of two 1553B data buses (bus a and bus b). If a single data bus on a channel fails, the prime MP will automatically switch to the alternate data bus on that channel. The flight data recorder (FDR), MP1, and MP2 are the only subsystems connected to both channel 0 and channel 1. Table 3-3 lists the avionics subsystem-to-channel connections.

3-5. Remote Terminal and Avionics Interface Units.

a. Remote Terminal Units. The RTUs provide analog to digital and digital to analog conversion for subsystems that cannot be directly interfaced to the 1553B data bus. RTU 1 is connected to data bus channel 0. RTU 2 is connected to data bus channel 1. A complete channel failure will render an RTU inaccessible. Helicopter engine and transmission systems information is monitored by both RTUs. If a single RTU fails, all avionics subsystems con-

Table 3-4. RTU Interfaces

EQUIPMENT	RTU 1	RTU 2
AFCS	X	X
AIR DATA COMPUTER	X	X
BLADE DEICE CONTROLLER	X	X
COUNTERMEASURES DISPENSER:		
CHAFF	X	-
FLARE	X	-
ENGINES, TRANSMISSION	X	X
FLIGHT CONTROL STICKS	X	X
FLIR	X	X
FM HOMING	X	-
FUEL SYSTEM	X	X
HF/KY-75	X	-
IFF, KIT 1C	-	X
INTERCOMMUNICATION SYSTEM	X	X
INTERFERENCE BLANKER	X	X
JAMMER, CONTINUOUS WAVE	X	-
JAMMER, INFRARED	X	-
JAMMER, PULSE	-	X
RADAR ALTIMETER	X	X
RADAR BEACON TRANSPONDER	X	-
RADAR, MULTI-MODE	X	X
SINCGARS/KY-58	-	X
STABILATOR CONTROL PANEL	X	X
TACAN	X	-
TRACK HANDLE	X	X
TSEC, KIT-1C	-	X
UHF/KY-58	-	X
VHF/KY-58	-	X
VIDEO RECORDER	-	X
VOR/ILS/MB RECEIVER	-	X
WARNING CAUTION SYSTEM	X	X
WARNING, CW RADAR	X	X
WARNING INDICATOR, RADAR	-	X
WARNING, LASER	X	X
WARNING SYSTEM, MISSILE	X	-
WARNING PANEL ASSY, MASTER	X	X
WARNING, PULSE RADAR	X	X
WARNING SYSTEM, VOICE	X	X
WEIGHT-ON-WHEELS	X	X

nected to only that RTU will be inaccessible. Table 3-4 lists RTU to avionics subsystems connections.

b. Avionics Interface Unit. The avionics interface unit (AIU) provides battery backup power to the Doppler navigation system and AHRS when normal aircraft 28 volts drops below 23.5 volts. It also provides the INU with 28 volts aircraft power and provides battery backup power to the INU when aircraft power drops below 19.5 volts.

3-6. Mission Processors.

Mission processor No.1 and mission processor No.2 provide primary data processing and 1553B data bus control for the integrated avionics subsystem (IASS). They also support helicopter and avionics system monitoring, controls and displays, navigation, mission management, guidance, system test initialization, and built-in simulation. Two mission processors provide redundancy in sustaining the IASS capabilities in the event of a single processor failure. To provide system security, the memory of the mission processor can be selectively erased by the crew. When power is applied to the IASS, mission processor No.1 assumes control of the data bus. Acting as a bus controller, this processor interrogates (polls) all devices connected to the data bus, one at a time. Mission processor No.2 assumes backup bus control and checks that it is being polled by mission processor No.1. If communication is not present to mission processor No.1, mission processor No.2 becomes the prime and takes control of the data bus with mission processor No.1 assuming backup bus control if the fault is corrected. If both mission processors become operational again, mission processor No.2 remains as the prime. To change the prime back to mission processor No.1, you must initialize mission processor No.2 which interrupts communications with mission processor No.1; thereby, causing mission processor No.1 to takes control of the data bus as the prime.

a. Mission Processor Functions. Mission processors monitor avionics and helicopter systems connected to the data bus either directly or through one of the RTUs. If a problem is encountered, the MP will generate the appropriate warning, caution, or advisory for display by the MFDs, by a voice warning message, and/or by cockpit warning lights. Crew inputs from the MFDs are formatted in the CDUs go directly to the MP. Control switches on the cyclic and collective stick grips and on the track handle are converted to 1553B data bus format by the display processors and RTUs. Mission processors receive the converted crew inputs from the data bus, process them, and route necessary control and data signals to the appropriate destinations via the data bus. Mission processors perform calculations which generate mission management information for the crew. This information relates to fuel consumption, power requirements, flight time, range, and airspeed. Mission processors also process information received from radar and helicopter sensors to support the internal navigation functions. Mission processors use data supplied by the navigation sensors to provide guidance and course-select functions to the crew. The MPs can also compute a course from the current helicopter position to the intercept point of a moving target. Mission processors generate difference data between present and desired helicopter positions to support flight director processing. Based on difference data and other flight conditions, such as airspeed and wind direction, MPs generate three axis cues to help guide the pilot along a desired helicopter flight path. Twenty flight director processing modes are supported by the mission processors.

NOTE

Graceful degradation occurs only in the AP102 model MPs. Graceful degradation prevention is not required for AP102A model MPs.

b. Graceful Degradation of Mission Processor. Graceful degradation is a process which is incorporated into the integrated avionics program (IAP) (a software program that is executed by the MP). Graceful degradation warns the pilots when the IAP computational load exceeds the computational capability of the MP. This condition can occur either from a hardware failure or a previously undetected software problem that becomes activated by a unique combination of input data and system states. A third cause of graceful degradation is insufficient processing capability of the MP. During graceful degradation, the MP automatically deactivates non-critical system functions in a 3-stage load shedding process to prevent computational cycle overruns. The time required for the computational cycle is directly related to those system functions in use by the pilot to perform the aircraft's mission. Therefore, as more system requirements are demanded by the pilot, the computational cycle will take more time to complete. When the time for the computational cycle exceeds its allotted time within the input/output cycle, IASS performance will be affected. Impending graceful degradation conditions are initially reported to the pilots by activation of the DISPLAY UPDATE LOSS advisory when the display update task fails to complete 5 or more times out of 100 computational cycles. When the display update cycle fails to complete 3 computational cycles in a row, the graceful degradation process automatically begins. Graceful degradation begins removing non-critical mission functions. Degradation occurs in the following order:

(1) Stage 1. When graceful degradation begins, the IAP DEGRADED caution message is displayed. Each MFD is examined to determine whether an equipment status page, equipment

summary page, or an ATHS page is being displayed. If so, the display is removed and replaced with a VSD primary page. In addition, if system reference coordinates are in UTM, graceful degradation will change the system reference coordinates to LAT/LONG. After 3 computational cycles, the display loss counter is checked to determine if the display update task ran to completion. If the display update task ran to completion, then graceful degradation remains at stage 1 and no further functions will be removed; otherwise, graceful degradation progresses to stage 2 and the display loss counter is reset. Removed display and/or UTM reference may be reselected by the operator; however, it should be noted that reselecting the removed display or change back to UTM coordinates may increase the processing time again if no other processing functions have been deactivated.

(2) Stage 2. Radio navigation guidance modes are checked for their armed state. If they are armed, filtering is deactivated. After 3 computational cycles, the display loss counter is checked to determine if the display update task ran to completion. If the display update task ran to completion, then graceful degradation remains at stage 2 and no further functions will be removed; otherwise, graceful degradation progresses to stage 3 and the display loss counter is reset. Filtering may be restored by reselecting radio navigation guidance mode; however, the processing time may increase again if no other processing functions have been deactivated.

NOTE

If graceful degradation causes the MP to reinitialize to the initial program load state, the first time data is uploaded from the DTMs to the MP, the ADSS declutter RSET LVL2 and RSET LVL3 keys must be reset.

(3) Stage 3. Computation of the checksums for the I/O data sent to the backup MP is stopped and the COMPUTER SYNC LOSS advisory is displayed. After 3 computational cycles, the display loss counter is checked to determine if the display update task ran to completion. If the display update task ran to completion, then graceful degradation remains at stage 3. If stage 3 is unsuccessful, the prime MP checks to see if the backup MP is available. If the backup MP is available, the prime MP is forced into load mode and the backup MP becomes the prime. If no backup MP is available, the IAP database is reinitialized to the initial program load state and the configuration select control page will be displayed on all four MFDs. Select MFD R1 (MH60K) key, the system will return to its initial inactive system state. All guidance modes will be deactivated and mission data erased.

NOTE

Once an MP goes into the load mode due to graceful degradation, it will remain off-line in order to preserve valuable debug data. The only means of recovery is by cycling the associated MP circuit breakers. However, this action will cause the debug data to be overwritten and severely limit the capability to investigate the cause of the problem. Therefore, it is important to attempt recovery only when MP operation is essential to mission requirements or the other MP is not available.

c. Graceful Degradation Prevention. The 1750A processor within the MP has insufficient processing capability to execute some worse case combinations of IASS functions. Operation of the MP under these conditions causes frequent activation of the graceful degradation mode and can result in an MP failure. The following guidelines can be utilized to avoid creating high loading conditions that are known to cause graceful degradation.

(1) When TF mode is required, select only one electronic or one tactical navigation guidance/ flight director mode at a time. (For example, Waypoint, TACAN armed or active, or PLS.)

(2) Do not display ATHS and equipment status pages at the same time.

(3) When the IASS is using UTM coordinates, select UTM display on one MFD only.

(4) When acknowledging cautions and advisories, first deselect ATHS and equipment status pages if displayed and pause for 1 second between each acknowledgment.

(5) When changing coordinates of an NRP, first deselect ATHS and equipment status pages if displayed and use LAT/LONG coordinates if possible. In addition, when pressing L1 key on

the CDU to enter entrypad data ensure no other throughput related advisories are present.

(6) Avoid using ATHS during an approach. (Using the ATHS during an approach will cause display update lost and momentary computer synchronization losses, but should not cause graceful degradation.)

3-7. MFD Description.

There are two color (inboard) and two monochrome (outboard) MFDs on the instrument panel, one set for the pilot and the other for the copilot. The MFDs replace analog flight instruments, helicopter systems instruments, and virtually all front panel controls.

a. Function keys on each MFD control functions, displays, and access to other pages. The key legends change as MFD pages are changed. A function key will be inactive if no text is shown next to that key. The copilot displays and function key entries are controlled by the copilot display processor (DP-CP), and pilot displays and function key entries are controlled by the pilot display processor (DP-P). If one display processor fails, the MFDs controlled by the failed display processor will automatically switch over to display the information provided by the display processor that is still functioning. If the failed display processor returns, that display processor's MFDs will display the pages selected prior to the failure.

b. The pilot color MFD and copilot monochrome MFD are provided ac power by the No.2 ac primary bus through circuit breakers marked PLT MFD COLOR and CPLT MFD MONO, and dc power by the No.2 dc primary bus through circuit breakers marked PLT MFD COLOR and CPLT MFD MONO, located on the pilot circuit breaker panel. The pilot monochrome MFD and copilot color MFD are provided ac power by the No.1 ac primary bus through circuit breakers marked PLT MFD MONO and CPLT MFD COLOR, and dc power by the No.1 dc primary bus through circuit breakers marked PLT MFD MONO and CPLT MFD COLOR, located on the copilot circuit breaker panel. The copilot display processor is provided power by the No.1 ac primary bus through the circuit breaker marked DP1, located on the copilot auxiliary circuit breaker panel. The pilot display processor is provided power by the No.2 ac primary bus through the circuit breaker marked DP2, located on the copilot auxiliary circuit breaker panel.

3-8. MFD Controls, Indicators, and Functions.

The mode selector switch located in the upper left corner of the MFD controls power to the unit and to select the mode of operation (Figure 3-2). Available operating modes are NIGHT, AUTO, and DAY. When NIGHT is selected, the brightness of the display can be manually adjusted up to ten percent of maximum intensity. When AUTO is selected, brightness of the display may automatically adjust up to maximum intensity. Ambient light sensors located on the upper right and lower center of the MFD adjust the intensity of the display, based on ambient light, when AUTO is selected. When DAY is selected, the display can be manually adjusted up to the maximum intensity available. Function keys (T1, T4, and T5) at the top of the MFDs are dedicated to specific functions and do not change as different MFD pages are accessed. Usage of function keys on the left (L1 through L7) and right (R1 through R7) of the MFDs, is defined by legends on the MFD page. In addition to the function keys, the pilot may use the cyclic cursor control and select switches to select a desired function. The WCA (warnings, cautions, advisories) key, located at the lower left corner of the MFD, accesses the WCA pages.

CONTROL	FUNCTION
	Mode Selector Switch
OFF	Removes power from MFD.
NIGHT	Limits maximum screen brightness of the MFD to ten percent of the maximum intensity. Operator manually controls the level of brightness. The night mode displays images in raster form.
AUTO	Brightness of the MFD is automatically adjusted by ambient light sensors on the MFD bezel to adapt to the ambient light in the cockpit.
DAY	Maximum range of MFD screen brightness is available. Operator manually controls the level of brightness.
	Brightness/Contrast Switches
SYM	Press top - To increase the brightness of the stroke symbols. Press bottom - To decrease the brightness of the stroke symbols. (No effect on screen display when night mode is selected)
BRT	Press top - To increase screen brightness. Press bottom - To decrease screen brightness.

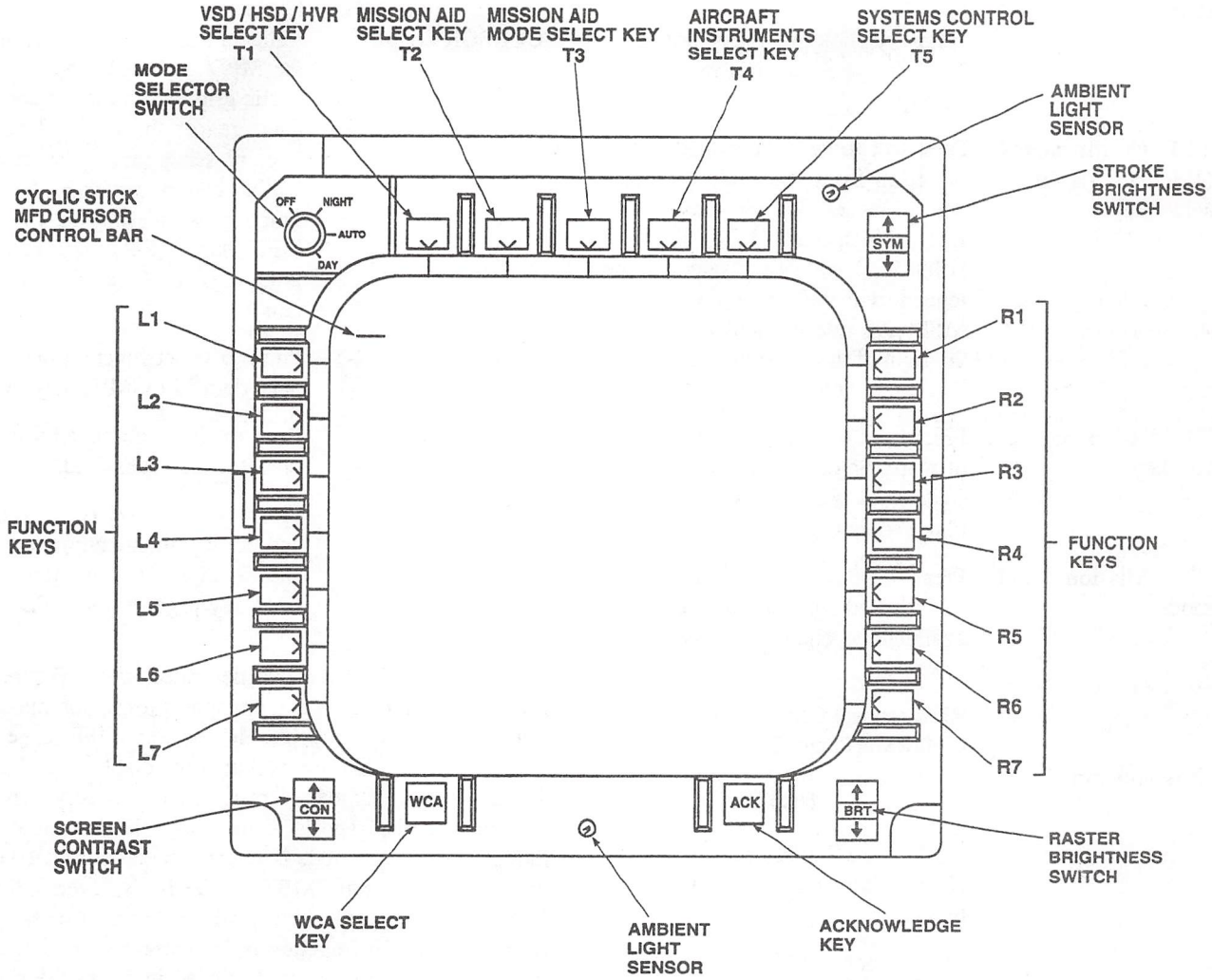

Figure 3-2. Multi-Function Display Controls

CONTROL	FUNCTION
CON	Press top - To increase contrast of raster symbology. Press bottom - To decrease contrast of raster symbology.
T1 Flight instrument (VSD/HSD/HVR) select key	Press to change flight display mode or return from the INST or SYST control layers. Selections available: HSD, VSD, and HVR. When a HSD, VSD, or HVR is selected, the legend will be white on a color MFD. An asterisk will be seen to the right of the legend on any MFD.
T2 Mission aid select key	Press to select a mission aid (sensor or map). Selections available: RDR (radar), FLIR, or MAP (map display generator).
T3 Mission aid mode	Press to select a mission aid mode of selected operation. Selections available depend on the mission aid selected. RDR modes: GM, TA, TF/TA, TF/GM, PMGT, and MTR. **NOTE** MAN and FWD are selected by the IDS switch on the FLIR track handle. FLIR modes: AVT, FPV, ELEV, PT, SCAN, MAN, and FWD. MAP modes: CHART, PLAN, PHOTO, 3D.
T4 Aircraft instruments select key	Press to access helicopter engine and power train instrument displays. When INST is selected, the legend will be white on a color MFD. An asterisk will be displayed to the right of the legend on all MFDs.
T5 Systems control select key	Press to access the systems (SYST) control layer. When selected, the legend will be white on a color MFD. An asterisk will be seen next to the legend on the MFD.
Cyclic stick MFD CURSOR control	Horizontal bar that moves (left, right, up, or down) in response to the MFD CURSOR control on the cyclic grip. When moved above the data area of the adjacent function key, pressing the cyclic grip SELECT button performs the same function as pressing the associated MFD key. (Refer to paragraph 2-85, Cyclic Stick, for more details.)
L-1 thru L-7 and R-1 thru R-7	Press to select function or access a page defined by MFD key legend.
ACK	Press to clear caution, advisory, and operator messages field.
WCA	Press to access WCA control layer and the warning, caution, advisory, and equipment summary pages from any page on the MFD.

a. The MFDs have five dedicated areas (Figure 3-3) for WCA, annunciator, and operator information messages. These areas are active (usable) on any MFD page. The WCA messages that are available for display are listed in Table 2-7. The number of caution and advisory messages that may be displayed is reduced by selecting the combat mode. The combat mode is selected by pressing L1 key on the WCA pages until CMBT MODE is displayed in the key legend. Combat mode suppresses less critical messages to reduce distraction (function is not currently implemented). Annunciator messages are displayed in either the right or left areas of the MFD. Operator messages are displayed on the bottom of the MFD. Operator and annunciator messages are described in the subsystem or software description that generates the annunciator or operator message. The acknowledge (ACK) key, located on the bottom right corner of the MFD, acknowledges caution and advisory messages, and displays subsequent messages should they occur.

NOTE

There are caution messages which may be displayed in the caution area that are not listed on WCA pages 2 and 3. All caution messages except for the CHIPS message will be stored on the CAUTION SUMMARY page. Only the ten most recent active cautions can be stored. When acknowledging caution messages, the pilot should make a note of the caution message before pressing the ACK key, if time permits.

There are advisory messages which may be displayed in the advisory message area that do not appear in WCA pages 2 and 3. Only cautions and advisories are listed in the WCA grid. The FPLN ALRT key updates and displays any flight plan associated alerts that have been acknowledged and are still in effect that are not listed on the WCA grid. When acknowledging advisory messages the pilot should make a note of the advisory message before pressing the ACK key, if time permits.

b. To provide NVG compatibility, a night vision goggle (NVG) mode is available through the system page. When NVG mode is selected, all colors except green are suppressed on the color MFD. The color MFD will only display monochrome symbols and cues in the NVG mode. In the normal mode, the color MFD will display in red, white, green, blue, and yellow. Green indicates normal operating ranges, key legends that identify functions that are off, annunciator messages, and other non-critical information. White indicates reference symbols, messages that need to be highlighted, and active key functions, displays, or control layers. Yellow indicates caution messages and the caution ranges of instruments. Red indicates warning messages or limits that have been exceeded. Blue represents the sky above the horizon in the VSD. The MFD will display digital values even if outside the valid range for that data. To indicate that a digital value shown is outside of the normal range, it will flash on and off or appear in reverse video.

NOMENCLATURE	FUNCTION
Advisory Message Area	The advisory message area is at the lower right of the MFD. Advisories appear in white letters on color MFDs, or green letters on monochrome MFDs and color MFDs in NVG mode. Only one advisory message appears at a time. When more than one advisory message is pending, a solid yellow arrow (green on monochrome displays) will appear next to the advisory. Once the advisory message has been acknowledged, using the ACK key, it will be deleted from the display, and the next pending message will appear. If no messages are pending, the area will be blank. Advisories can only be acknowledged after all cautions have been acknowledged and cleared.
Annunciator Message Area	Annunciator messages appear on the right or left of the MFD. These messages are prioritized so that the most important annunciator will preempt less critical annunciators. Annunciators are used primarily as aids or status indicators for the IASS. Annunciators appear only on pertinent pages or displays (e.g., marker beacon annunciators only appear on VSD, HSD, and HVR). The conditions that generate annunciators are described in the subsystem description pertinent to that message.

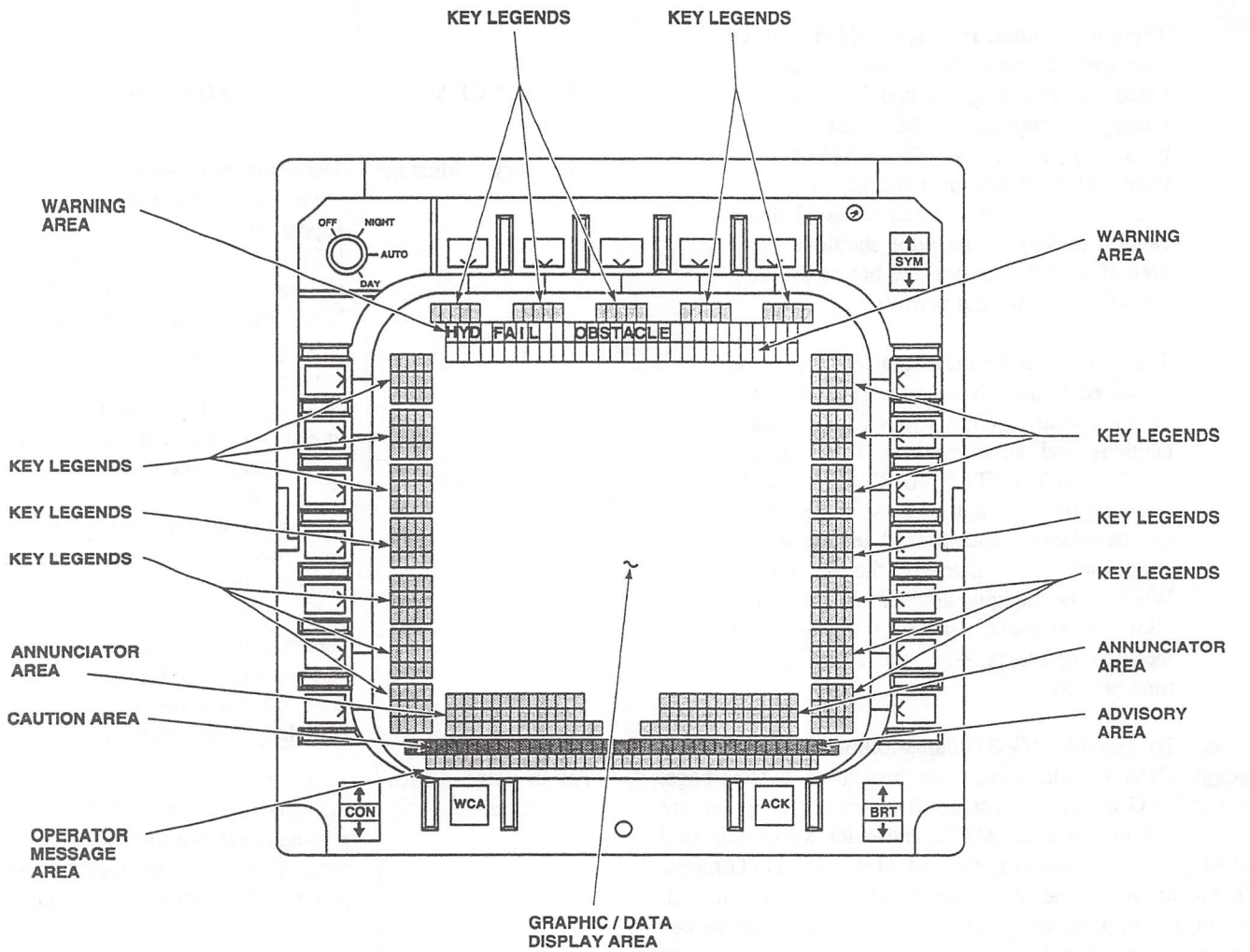

Figure 3-3. MFD Display Areas

NOMENCLATURE	FUNCTION
Caution Message Area	The caution message area is at the lower left of the MFD. Cautions appear in yellow letters on color MFDs, or green letters on monochrome MFDs and color MFDs in NVG mode. Only one caution message appears at a time. Cautions are ranked by priority. Only the highest priority caution message will be shown. When two or more caution messages are pending, a solid yellow arrow (green on monochrome displays) will appear to the right of the caution message. Once a caution message is acknowledged, using the ACK key, it is deleted from the display, and another pending caution message appears. If no messages are pending, the area will be blank. If all cautions have been acknowledged, pressing the ACK key again will then acknowledge advisories.
Key Legends	Key legends identify any one of the following items: functions that may be activated by pressing the key, the currently active mode (when multiple modes are available), the MFD page that can be reached by pressing the key. When a function is active an asterisk will appear next to the legend. On a color MFD the selected key legend also appears white, unless NVG mode has been selected.
Operator Message Area	Operator messages appear on the bottom line of the MFD. These messages are similar to annunciators except that these appear as a result of an operator entry or operation. The conditions that generate the operator messages are described in the subsystem or software description pertinent to that message.
Warning Message Area	The warning message area is at the top of the MFD. When a warning is active, it shall be shown until it is no longer valid. Warnings are shown in black letters in a red field for color MFDs or black letters in a green field for monochrome MFDs and color MFDs in NVG mode. There are two warning messages: OBSTACLE and HYD FAIL.

3-9. MFD Operation.

NOTE

Whenever an MFD is powered on, it will display whatever had been in use just before power was last turned off.

1. To place an MFD in operation:
   a. Turn the MFD mode selector switch to the desired position (NIGHT, AUTO, or DAY).
   b. Set SYM (symbol brightness), BRT (screen brightness), and CON (screen contrast) switches to comfortable levels.
2. To select a flight instrument display: press T1 key; repeat until desired flight display appears.
3. To select a mission aid: press T2 key; repeat until desired mission aid is selected.
4. To select a mission aid mode of operation: press T3 key; repeat until desired mode appears.
5. To select a function or get to a control page: press the key adjacent to the desired function or control page.
6. To remove the power from the MFD: turn the MFD mode selector switch to the OFF position.

3-10. CDU Description.

The Control Display Units (CDU) allow you to enter alphanumeric data for equipment control or operating parameters (Figure 3-4). The CDU on the right side of the lower console supports the pilot's MFD and the CDU on the left side supports the copilot's MFD.

a. The CDUs are equipped with a display area, eight line-select keys, an alphanumeric pad, data entry keys, and fixed function keys. Seven line-select keys (L1 thru L3 and R1 thru R4) serve to select a data line for entry or modification. The data line corresponding to L4 key functions as an entrypad which allows you to enter/modify data, and it also allows the pilot to store and recall data on another display. The PG▲ and PG▼ keys allow selection of previous or subsequent CDU pages when more than one page is available. The CDUs can be used in conjunction with the MFDs or independently using the fixed function keys and CDU-only pages.

b. Power for the pilot CDU is provided on the No.2 ac primary and the No.2 dc primary buses, through two circuit breakers labeled NO.2 CDU. Power for the copilot CDU is provided on the No.1 ac primary and the No.1 dc primary buses, through two circuit breakers labeled NO.1 CDU.

3-11. CDU Controls, Indicators, and Functions.

The fixed function keys allow immediate access to a CDU-only page, or direct control of a function. The ENT (enter) key is only used in association with the NRP and flight plan summary data entry pages. Once information has been entered on a CDU data entry page, the ENT key is pressed to enter the data for the entire page. The ALT (alternate) key is used as a shift key, allowing selection of the upper functions of dedicated function and data editing keys (e.g., ZRO/SOS, DEL/◀). When ALT is pressed, a reverse video arrow appears in the CDU. When a value which is outside the allowable limits is entered, an INVALID DATA ENTRY message shall appear.

KEY/LEGEND	FUNCTION
	Line-Select Keys
L1 thru L3 and R1 thru R4	Press to enter or modify desired data line.
L4 (Entrypad/Alerts)	Press to move the cursor to the first character field of the entrypad. The maximum number of alphanumeric characters allowed per entry is 20. This key also store data in nonvolatile memory and recalls data onto another display.
	Fixed Function Keys
PG▲	Press to select previous CDU page (only active when multiple page display is available)
PG▼	Press to select next CDU page (only active when multiple page display is available)
ID	Press to transmit IDENT on Radar Transponder APX-100 (used for air traffic control functions).
ZRO	Press ALT, then ZRO, to select the CDU-only zeroize page.
SOS	Press to configure radios in an emergency state. A MATDAY annunciator is displayed on the MFDs and radios are tuned to the following guard frequencies: 40.50 MHz on the FM (SINCGARS), 121.5 MHz on the VHF, 243.000 MHz on the UHF-AM HAVE QUICK, and transmit 7700 on the transponder. The HF radio goes to channel 1. (This key is software-protected and must be pressed twice to turn the function on or off.)
TIM	Press ALT, then TIM, to select the CDU-only timer page.
EMC	Press to select the CDU-only emissions control (EMC) page.
VCR	Press ALT, then VCR, to select the CDU-only VCR page.
ASE	Press to select CDU-only aircraft survivability equipment (ASE) page 1.

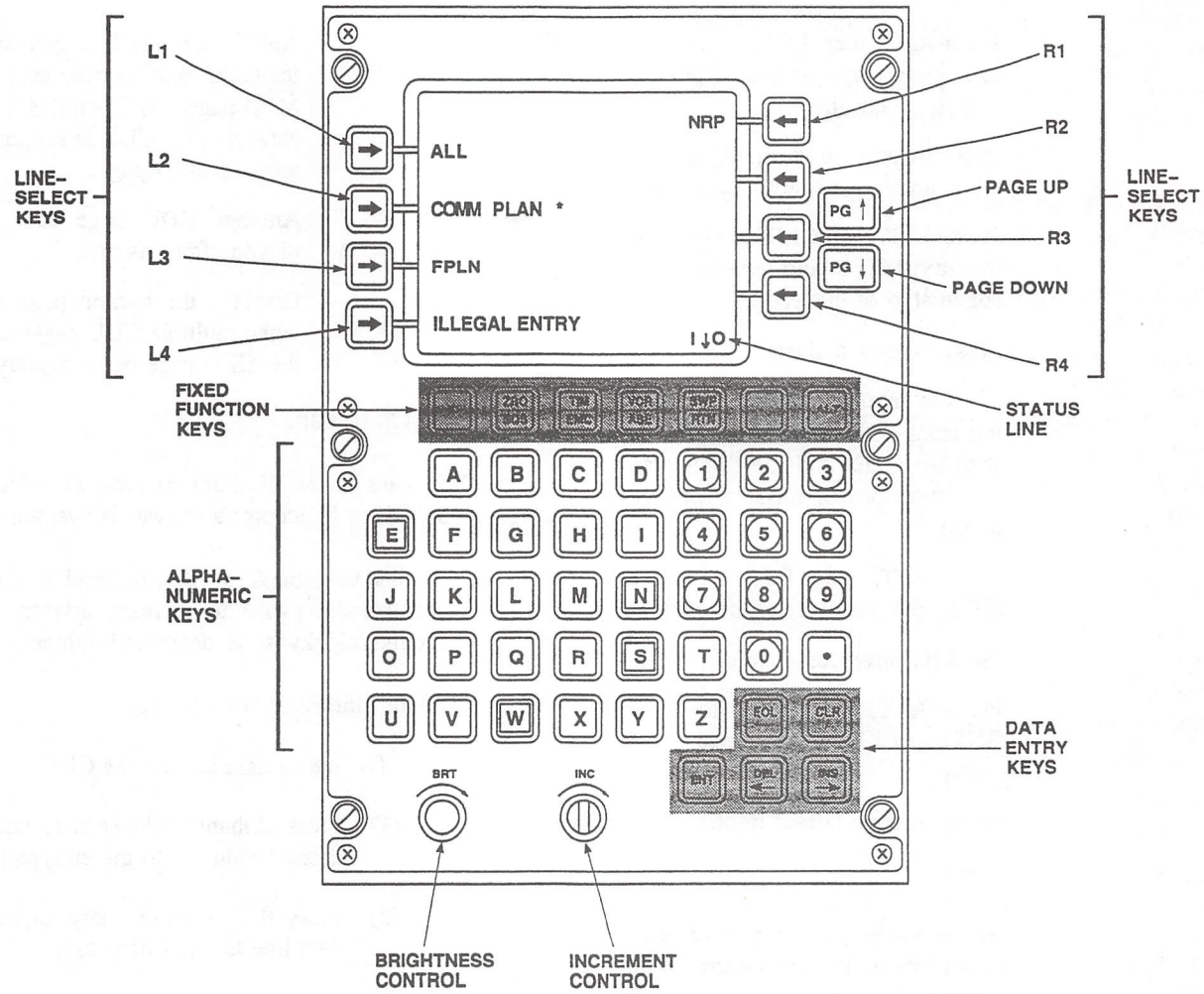

Figure 3-4. CDU Controls

KEY/LEGEND	FUNCTION	KEY/LEGEND	FUNCTION
SWP	Press ALT, then SWP, to swap the control of the MFD being supported (inboard-color to/from outboard-monochrome).		Alphanumeric Keys
		A - Z and 0 - 9	Press desired number or letter to modify or enter data.
RTN	Press to select the CDU system default screen from a CDU-only page.	•	Press to enter a decimal point.
ALT	Press to select upper functions and CDU-only pages.		

KEY/LEGEND	FUNCTION
	Data Entry Keys
EOL	Press ALT, then EOL, to erase all characters from the cursor position to end of the line.
—	Press to enter a dash. Also, used when entering negative numbers.
CLR	Press ALT, then CLR, to clear data in entrypad area and reposition cursor to start of entrypad.
/	Press to enter a slash.
ENT	Press to enter an entire page of values from CDU (used in conjunction with the CDU and the flight planning functions of mission management).
DEL	Press ALT, then DEL, to delete (DEL) the character at the cursor.
◀	Press to move cursor left.
INS	Press ALT, then INS, to insert (INS) space in the entrypad above cursor.
▶	Press to move cursor right.
	Other
INC	Rotate knob clockwise to increase or counterclockwise to decrease the numerical value of the selected function. First, press CDU line select key of the desired function, the current value of this function will be displayed in the entrypad area. Rotate INC knob as required to change numerical value. Most numerical values are affected by INC knob. Frequencies will only change between assigned presets of the selected radio.
BRT	Rotate clockwise to increase, counterclockwise to decrease brightness of CDU display.

KEY/LEGEND	FUNCTION
Status Line	
O or I	An "O" on this line indicates that the CDU is supporting an outboard MFD page. An "I" on this line indicates that the CDU is supporting an inboard MFD page.
▼	Another CDU page can be displayed after this one.
1, 2, 3, etc.	Displays the current page number when multiple CDU pages exist for the MFD page being displayed.

3-12. CDU Operation.

The CDUs are on at all times as long as external ac power is applied, or helicopter ac power is available.

1. Adjust brightness to a desired level, rotate BRT control clockwise to increase brightness and counterclockwise to decrease brightness.

2. Data Line Entry/Modification.

   a. To enter a data line on the CDU:

      (1) Press alphanumeric keys to enter the desired values into the entrypad.

      (2) Press the line-select key adjacent to data line to enter new data.

   b. To modify a data line on the CDU:

      (1) Press the line-select key adjacent to desired data line. (The data line information will now appear in the scratch pad.)

      (2) Place cursor under value to be changed using left or right arrow key.

NOTE

The increment control (INC) may only be used when an asterisk is displayed on the selected data line.

(3) Press desired line key.

(4) Rotate INC control clockwise to increase value, or counterclockwise to decrease value, or use the alphanumeric keys (INC may not be available for use with all data).

c. To store data:

(1) Pressing CDU L4 key with data in the entrypad will store that data into memory.

(2) Pressing CDU L4 key when the entrypad pad is empty, will recall the stored data from memory and display the stored data in the entrypad.

3-13. Cyclic and Collective Grips MFD Controls.

The cyclic grip can be used to emulate pressing the function keys (L1 thru L7, R1 thru R7, and T1 thru T5) on an MFD. The collective grip can be used to select one of seven radios and one of its preset frequencies/channels. The cyclic MFD CURSOR control positions the MFD cursor bar above the desired function; once positioned, pressing the cyclic SELECT button will cause the MFD to perform as if the actual function key was pressed. The collective grip radio select control allows toggling between available radios and their presets when the communications system control (CSC) panel mode select switch is at the RMT position. Pressing the radio select button left or right (RAD SEL function) will toggle between available radios. Pressing the radio select button up or down (CHAN UP or DN function) will toggle between assigned presets for the selected radio. Refer to paragraphs 2-85 and 2-86, Cyclic Stick and Collective Pitch Control Stick respectively, for more detailed information.

3-14. MFD/CDU Control Layers.

NOTE

When a line select key is pressed to select an MFD/CDU page, a delay of up to several seconds may be experienced accessing some pages.

There are five MFD control layers (HSD, VSD, HVR, INST, and SYST) and five CDU direct access pages (ZRO, VCR, EMC, ASE, and TIME) as illustrated on Figure 3-5. In addition to the MFD five control layers, one direct access key (WCA) on the MFDs is available to display the MFD WCA pages. Each MFD control layer is accessible from any one of the other five control layers. When an MFD page is displayed, an associated CDU page will appear on the respective CDU. CDU direct access pages are accessible by pressing the respective key. The active control layer is identifiable by the asterisk adjacent to its MFD key legend (e.g., SYST*). An asterisk is also used to toggle between the active (on) and inactive (off) state of certain MFD and CDU, left and right line-select keys. To get to the MFD/CDU pages shown within a control layer, press the legend key that corresponds to the name of the desired page. To get to pages in another control layer, press the T1, T2, or T3 key corresponding to the desired control layer; then press the legend key corresponding to the name of the desired page. To gain access to the WCA control layer, press the WCA fixed function key. When additional similar MFD pages are available (e.g., cipher control pages 2 and 3), the word NEXT will appear next to MFD L7 key to indicate that more pages follow, or PG▲ or PG▼ will appear next to MFD keys R5 and R6 keys.

a. VSD/HSD/HVR Primary Control Layers. These control layers provide entry to the following MFD pages:

(1) NAVAIDS page - provides limited control and access to additional pages for the TACAN, VOR, ADF, PLS, and FM - homing functions.

(2) IFF page - provides limited control of the IFF and radar beacon transponders.

(3) COMM page - provides limited control and access to additional pages for the SINCGARS, VHF, UHF, and HF radios.

(4) FLIR/MAP/RDR control pages - provide limited control and access to FLIR/MAP/RDR systems.

(5) Tactical Flight Director - provides limited control and access to additional navigation pages.

(6) Electronic Flight Director - provides limited control and access to additional pages for the ADF, ILS, VOR, TACAN, Heading/Track Select, and PLS.

(7) Update control pages - provide positioning system updates via sensor systems and radio NAVAIDS.

(8) Store control pages - provide storing of sensor systems data.

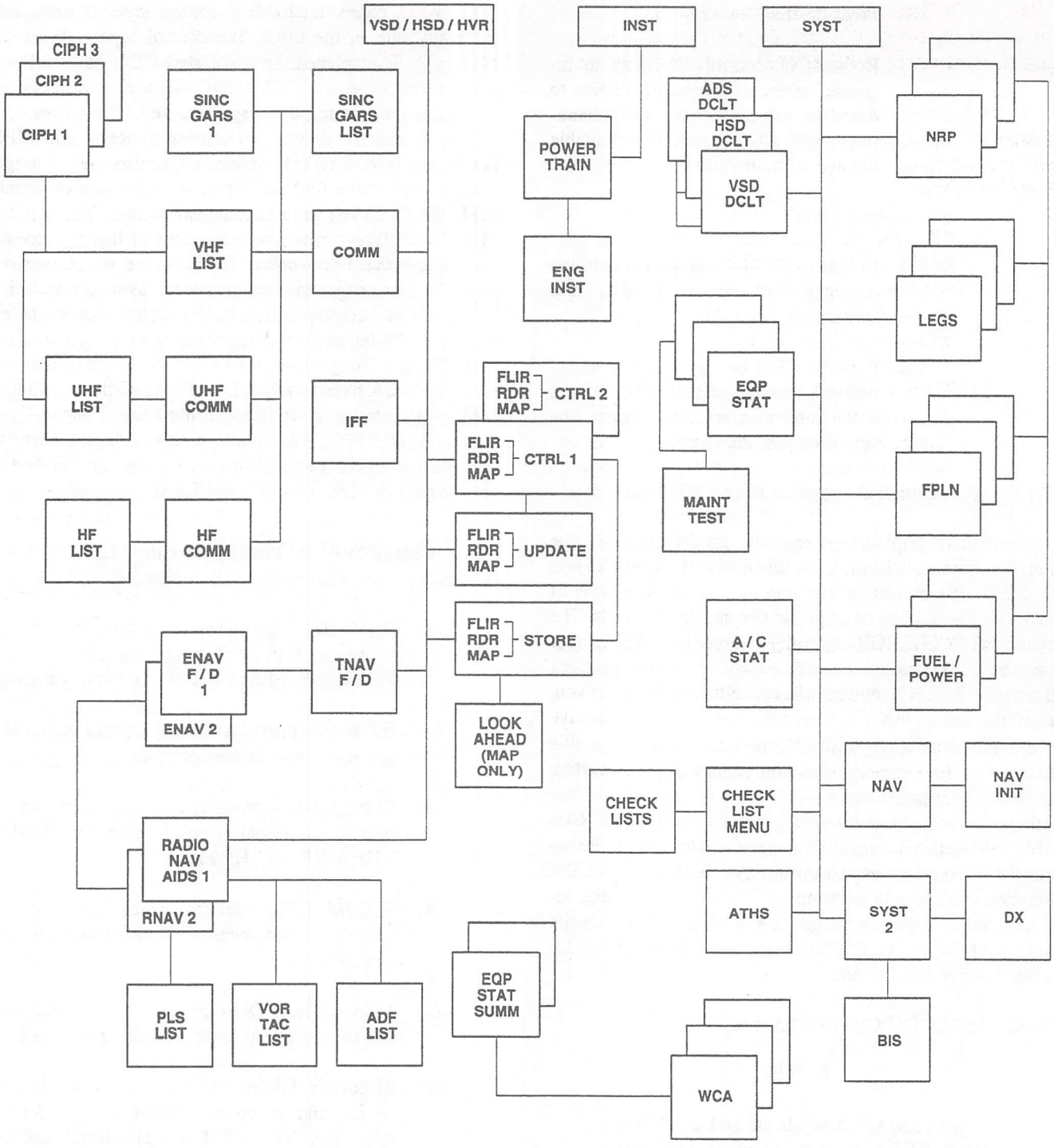

Figure 3-5. MFD Control Layers and CDU Topology

b. INST Control Layer. This control layer provides entry to the engine instruments display page or the power train instruments page. Refer to Chapter 5, for more details.

c. SYST Control Layer. This control layer provides a mixture of flight management, display control, equipment and aircraft status, maintenance, and airborne target handover functions.

(1) HSD declutter page - allows setting HSD symbology at two levels of symbology concentration. This page also provides entry to the VSD and ADS declutter pages for setting levels for each one of these displays.

(2) Equipment status pages - these provide a listing of the functional status of all IASS components. These pages also provide entry to the maintenance test page for diagnostic procedures or data entry.

(3) Aircraft status page - provides a listing of current and previous abnormal helicopter conditions.

(4) Checklist menu page - provides a list of preflight, in-flight, emergency, and postflight checklists for selection and display.

(5) Data extraction (DX) function - this function is for engineering use only, providing engineering flight data.

(6) Built-in simulation page - this function is for engineering and/or training use only.

(7) NRP table pages - provide a list of navigation reference points and allows changes or modification of any of NRP data.

(8) Flight plan leg page - provides all pertinent information for any one of the legs and allows modification of flight plan data.

(9) Flight plan summary page - provides a listing of all flight plan legs. The following information is given for each leg: origin, destination, ETA, course, and distance. The pilot may also modify flight plan data associated with any flight plan leg.

(10) Fuel and power summary page - provides a listing of all the flight plan legs, the original amount of fuel, fuel consumed by the leg, fuel remaining, bingo fuel required, and the available and required torque parameters. The pilot may also modify flight plan data associated with any flight plan leg.

(11) ATHS menu page - provides functional control of the airborne target handover system.

e. WCA and CDU Direct Access Pages. Direct access to these pages is provided by the associated MFD or CDU key. The WCA pages also provide entry into the equipment status summary pages which list the name and operational status of every component of the IASS.

Section II COMMUNICATIONS

3-15. Communications System.

The communications system consists of the non-IASS and IASS controlled equipment. Non-IASS controlled communications equipment consist of the communications system control (CSC) unit, a ground communication (GNDCOM) radio, and a secure satellite communications (SATCOM) radio. IASS controlled communications equipment consist of a secure SINCGARS radio, a secure VHF AM-FM radio, a secure UHF-AM radio, a secure HF radio, an airborne target handover system (ATHS), an emergency locator transmitter (ELT), a personnel locator system (PLS), and IFF. All related antennas are shown in Figure 3-6.

3-16. Avionics Racks.

The avionics racks are located in the cabin compartment on the forward bulkhead (Figure 3-7). The avionics racks are used to store the following items of equipment: (1) ATHS processor, (2) video cassette recorder, (3) air data computer, (4) LF/ADF receiver, (5) PLS receiver/transmitter, (6) FLIR system electronics unit, (7) No.8 relay panel, (8) map display generator, (9) SATCOM power amplifier and transceiver, (10) display processor No.1, (11) GNDCOM radio, and (12) two electrical control units. The racks have three doors with cam lock fasteners that provide access to the map display generator, video cassette recorder, and SATCOM transceiver. The video cassette door allows access to video recorder for inserting and removing video tape. The map display generator door allows access to the map display generator for inserting and removing data transfer module (DTM). The SATCOM door allows access for removing and reinstalling the SATCOM radio. The SATCOM radio can be removed and operated outside of the aircraft with its battery power pack, antenna, and handset. The controls on the SATCOM transceiver perform the same functions as the remote SATCOM control unit on the lower console, except the transmitting distance is limited due to the lack of the power amplifier. When the SATCOM transceiver is installed in the avionics rack, the volume and squelch controls may require adjustment if the remote unit on the lower console does not supply sufficient levels. Operation of the equipment in the avionics racks is described within Chapter 3 and 4 of the respective equipment.

3-17. Non-IASS Controlled Communications.

Operation of non-IASS communications equipment is controlled by knobs and switches on their front panels. The MFDs and CDUs are not used to setup or operate these systems. However, some portions of the IASS are partially controlled by the CSC and AUX ICS panels (i.e., radio keying and reception selections and audio level adjustments).

3-18. CSC and AUX ICS Panel.

The CSC unit and AUX ICS control panels provide audio interface and control for seven communication radios and three navigation radios. Pilot and copilot CSCs and AUX ICS panels are located on the lower console (Figure 2-4). Right gunner and troop commander CSCs are collocated near the right gunner station. The left gunner CSC is located at the left gunner station. Table 3-5 identifies the communication subsystem functions which are available at each station. The AUX ICS panels allow the pilot and copilot only to choose independently between the HF and SAT (SATCOM) radios when the CSC control panel RADIO MON and mode selector have been set to operate on 4. The AUX ICS panels also allow the pilot and copilot to choose between the GNDCOM and PLS radios when the CSC control panel RADIO MON and mode selector have been set to operate on 5. The selection also affects the radio available for transmission when the CSC control panel mode selector switch is placed at the 4 or 5 position. When a radio is selected by pressing the desired AUX ICS key, the selected capsule will be lit and the radio will be able to transmit and receive. These functions will be disabled for the radio which has not been selected on the AUX ICS control panel at the same station.

3-19. CSC Modes of Operation.

ICS and external communication are provided when the CSC panel switches are placed at the appropriate positions. Keying modes are: HOT MIC, NORM, and VOX ON. In HOT MIC mode the operator microphone is continuously on for ICS only. Push-to-talk capabilities are provided by the cyclic stick switches, floor switches, ICS cords, crew hover grip, and rescue hoist pendant. VOX ON keys the ICS only and is automatically actuated when speaking into the microphone. VOX ON operation is disabled when a radio is being used for transmission/reception. The MIC switch allows the operator to use either the SPH-4 (a low impedance microphone) or the SPH-4B (a high impedance microphone) helmets with this helicopter.

a. Internal Communications. Internal communications are available when a CSC mode selector switch is at the ICS or PVT position. The function selector allows several keying methods to include turning off the ICS capability for that CSC. The CSC panel PVT position allows communication between dedicated stations. The pilot and copilot

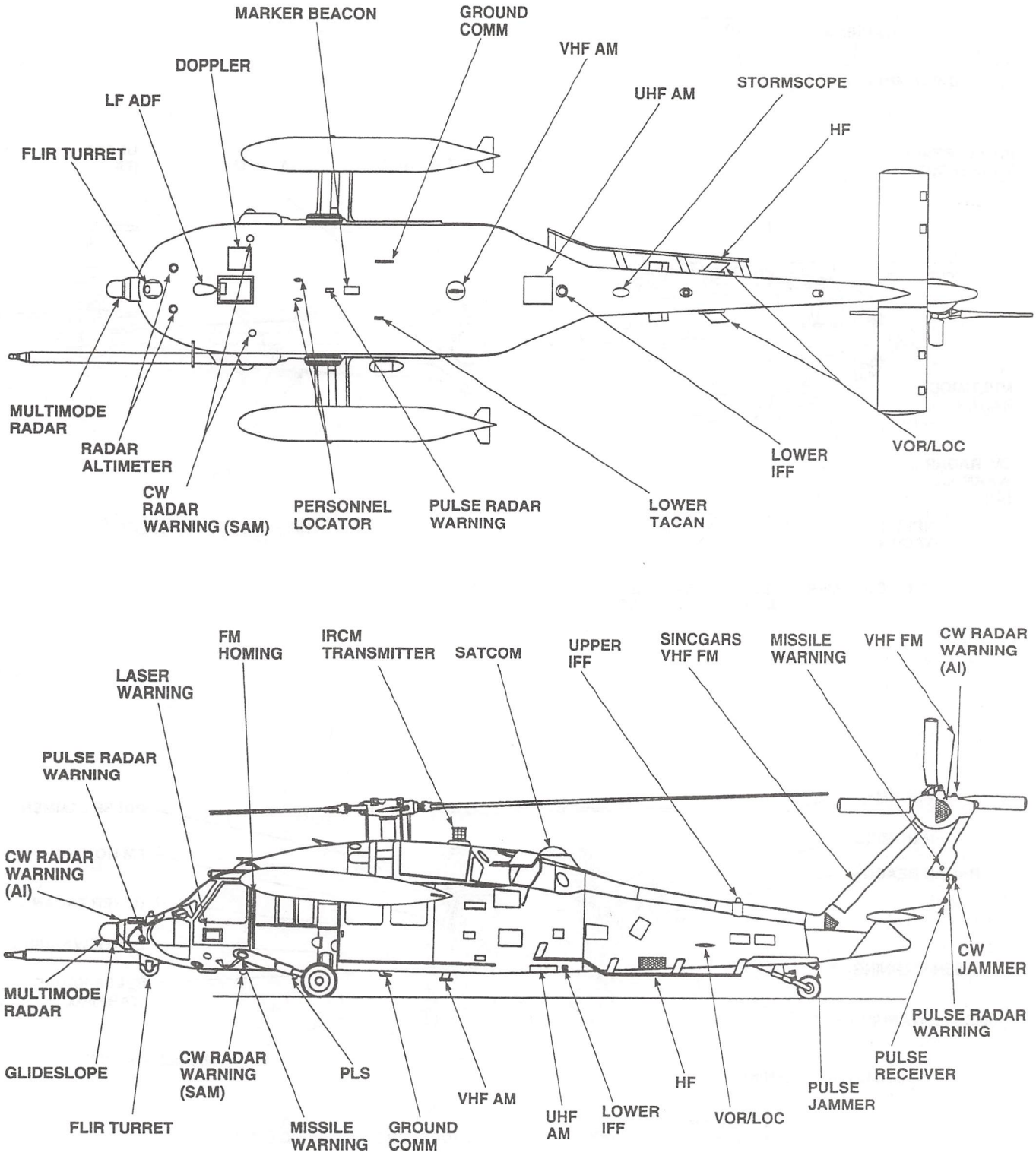

(BOTTOM AND SIDE VIEWS)

AK0085_1
SA

Figure 3-6. Antenna Arrangement (Sheet 1 of 2)

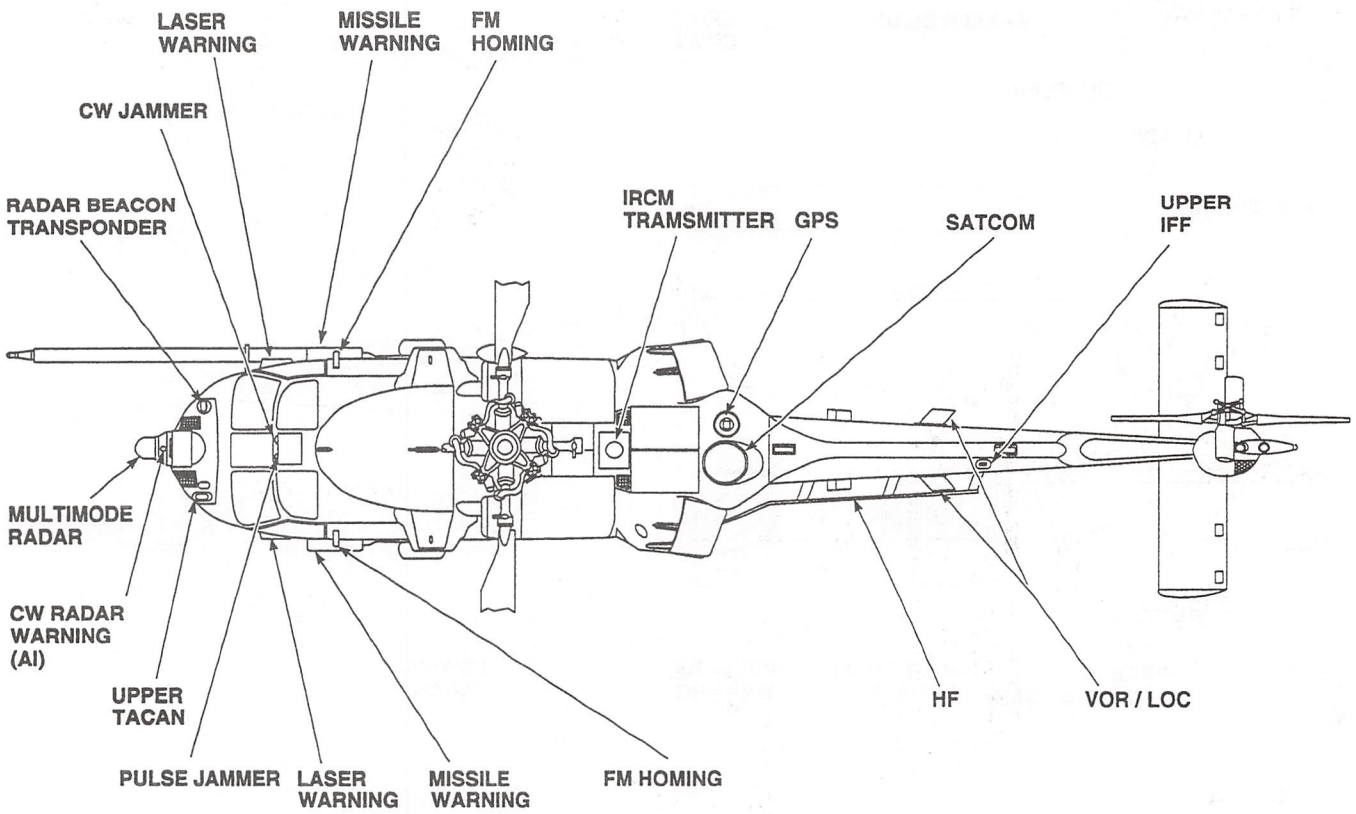

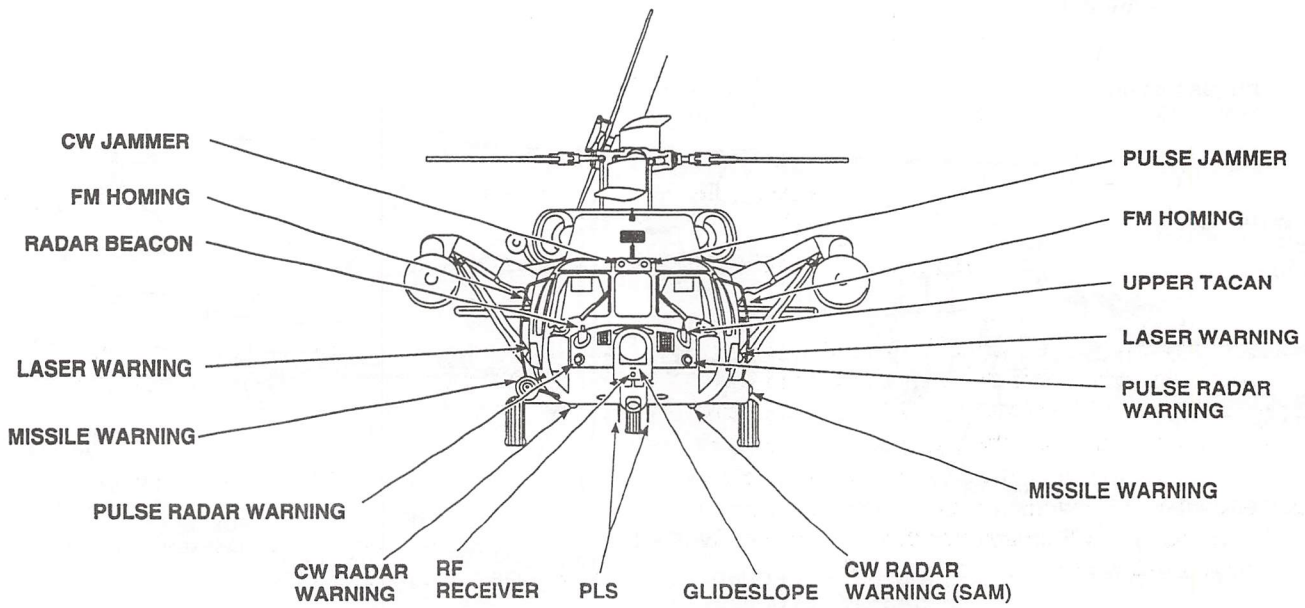

(TOP AND FRONT VIEWS)

AK0085_2
SA

Figure 3-6. Antenna Arrangement (Sheet 2 of 2)

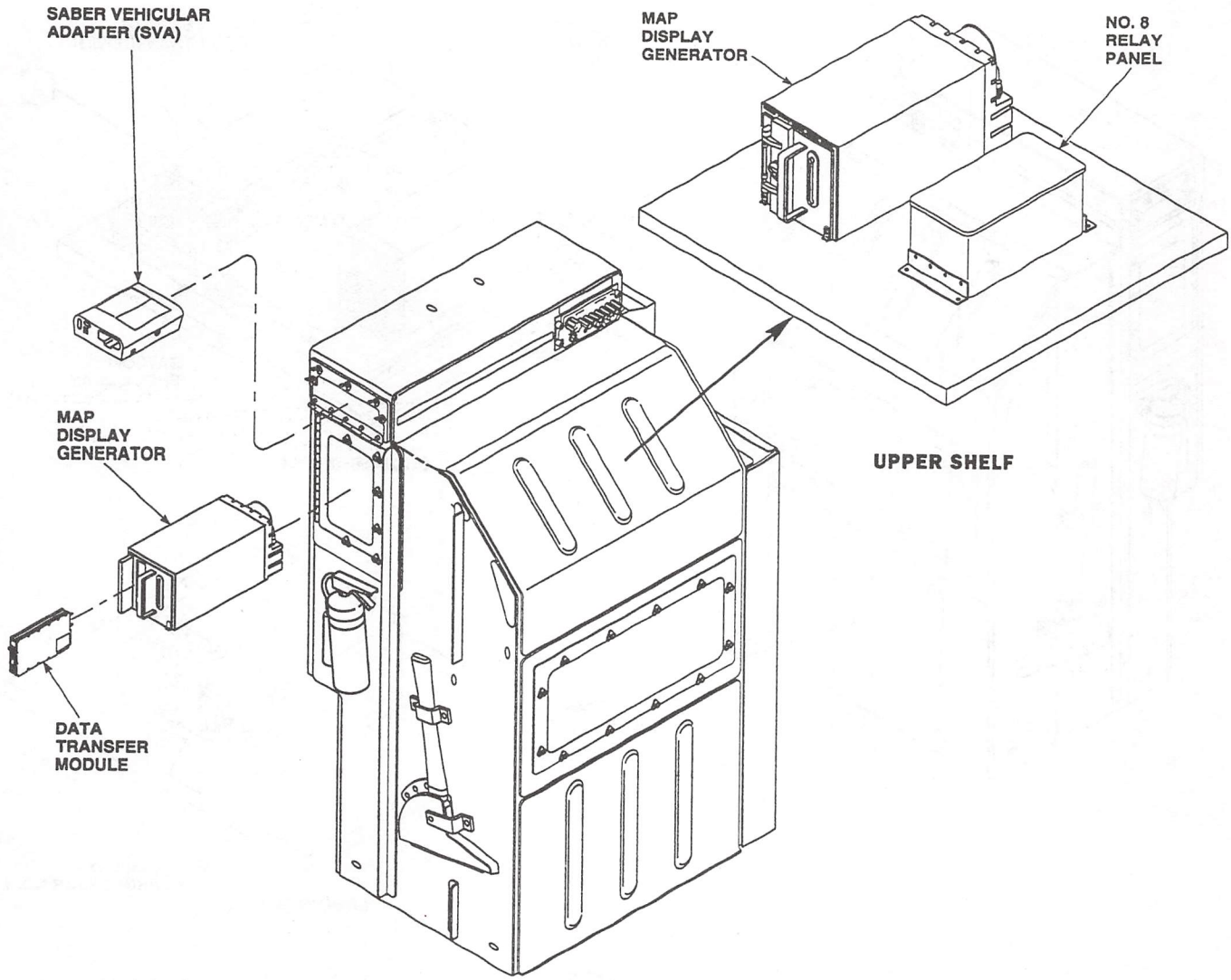

Figure 3-7. Cabin Avionics Racks (Sheet 1 of 3)

stations are a dedicated PVT capability while the crewchief/ right gunner, left gunner, and troop commander stations are another dedicated PVT capability. The troop commander ICS can also be keyed using the trigger switch on the crew hover grip or the intercom switch on the rescue hoist pendant. Actuating either one of these switches provides NORM keying of troop commander ICS, even if the CSC panel mode selector switch is not set to ICS.

b. External Communications. External communications are available when the mode selector is at position 1, 2, 3, 4, or 5 and the respective radio is operational. Keying of a radio is provided by the CSC function selector switch when HOT MIC or NORM position is selected. Transmitting radio may be selected via the CSC mode selector switch RMT position and the MFD collective stick control switch.

3-20. CSC and AUX ICS Controls and Functions.

Controls and indicators for the CSC and ICS AUX panels are shown in Figures 3-8 and 3-9.

CONTROL	FUNCTION
VOL Control Knob	Master volume control adjusts all RADIO MON and NAV volume levels simultaneously.

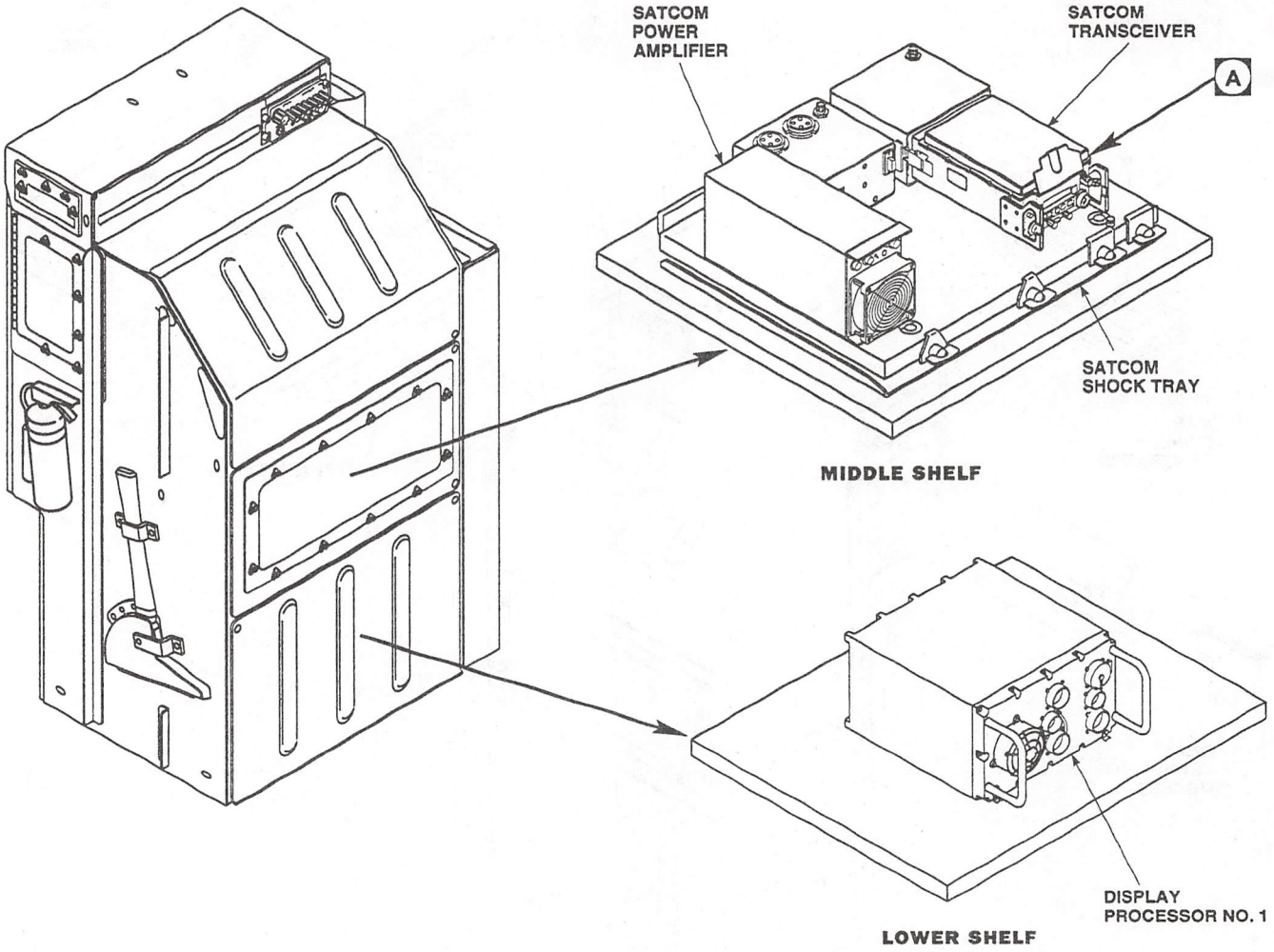

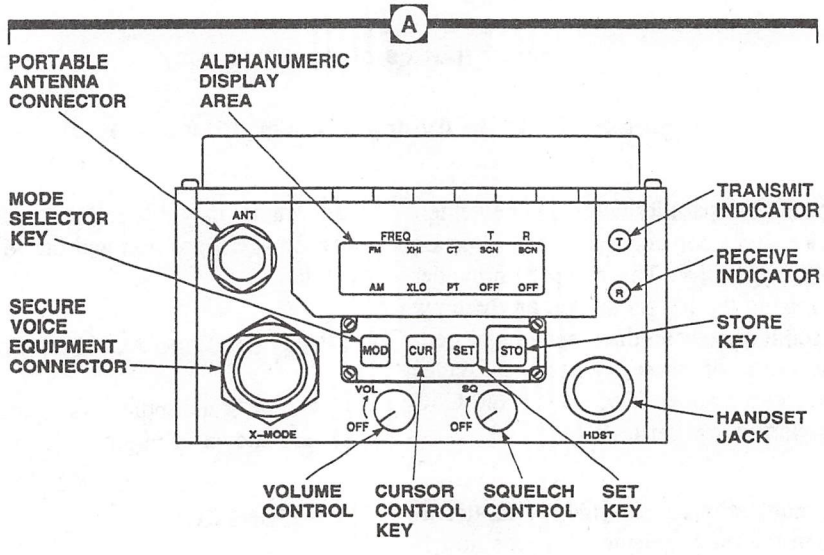

RIGHT-HAND SIDE AVIONICS RACK

AK2817_2 SA

Figure 3-7. Cabin Avionics Racks (Sheet 2 of 3)

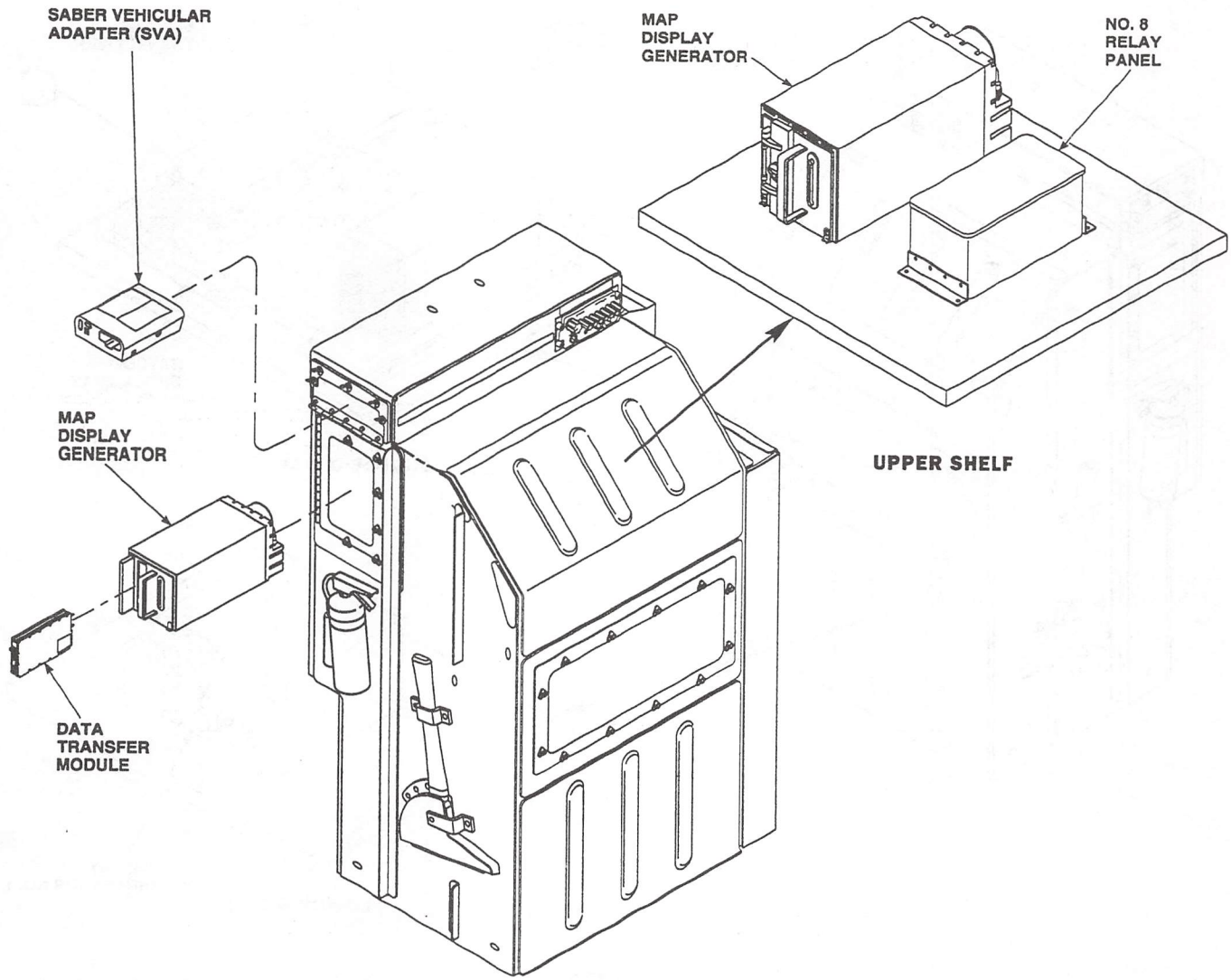

Figure 3-7. Cabin Avionics Racks (Sheet 1 of 3)

stations are a dedicated PVT capability while the crewchief/ right gunner, left gunner, and troop commander stations are another dedicated PVT capability. The troop commander ICS can also be keyed using the trigger switch on the crew hover grip or the intercom switch on the rescue hoist pendant. Actuating either one of these switches provides NORM keying of troop commander ICS, even if the CSC panel mode selector switch is not set to ICS.

b. External Communications. External communications are available when the mode selector is at position 1, 2, 3, 4, or 5 and the respective radio is operational. Keying of a radio is provided by the CSC function selector switch when HOT MIC or NORM position is selected. Transmitting radio may be selected via the CSC mode selector switch RMT position and the MFD collective stick control switch.

3-20. CSC and AUX ICS Controls and Functions.

Controls and indicators for the CSC and ICS AUX panels are shown in Figures 3-8 and 3-9.

CONTROL	FUNCTION
VOL Control Knob	Master volume control adjusts all RADIO MON and NAV volume levels simultaneously.

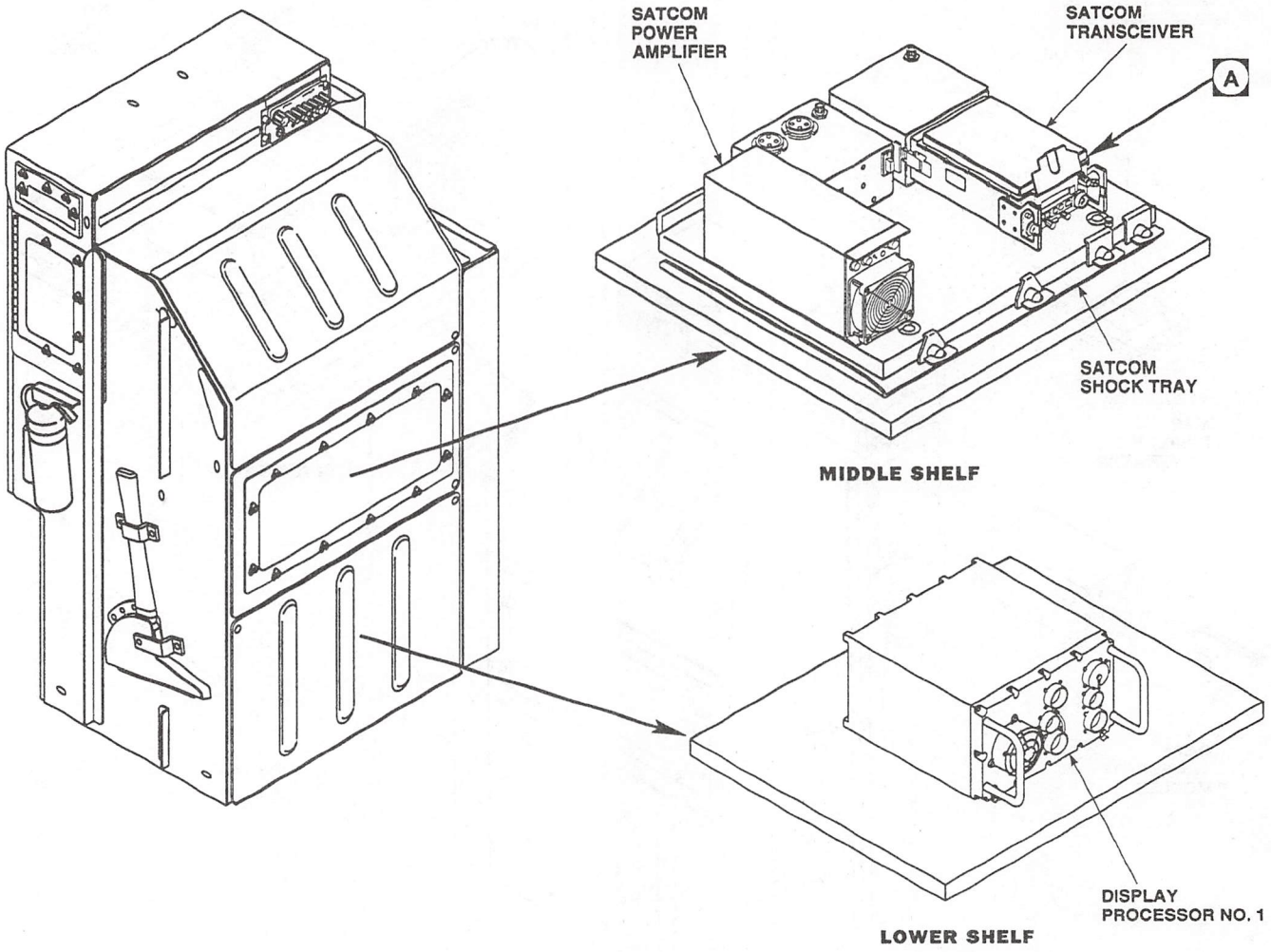

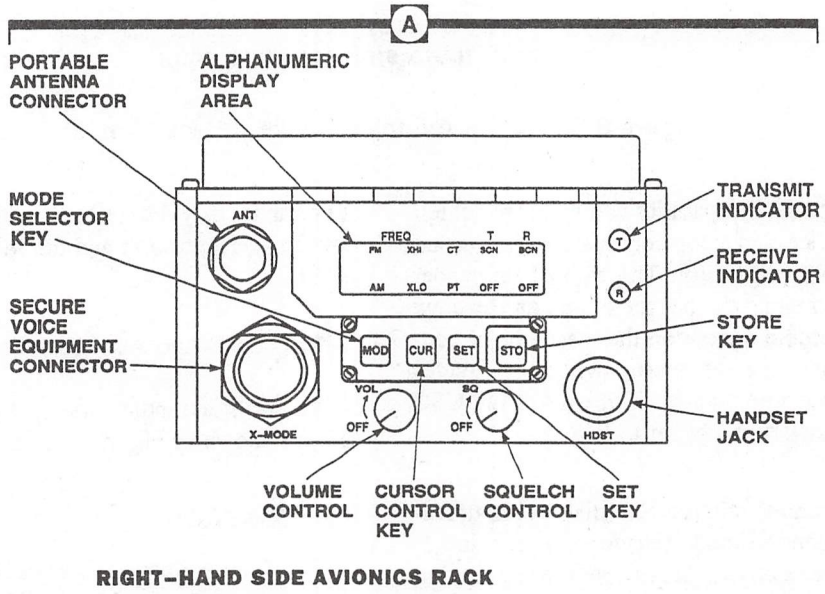

RIGHT-HAND SIDE AVIONICS RACK

AK2817_2
SA

Figure 3-7. Cabin Avionics Racks (Sheet 2 of 3)

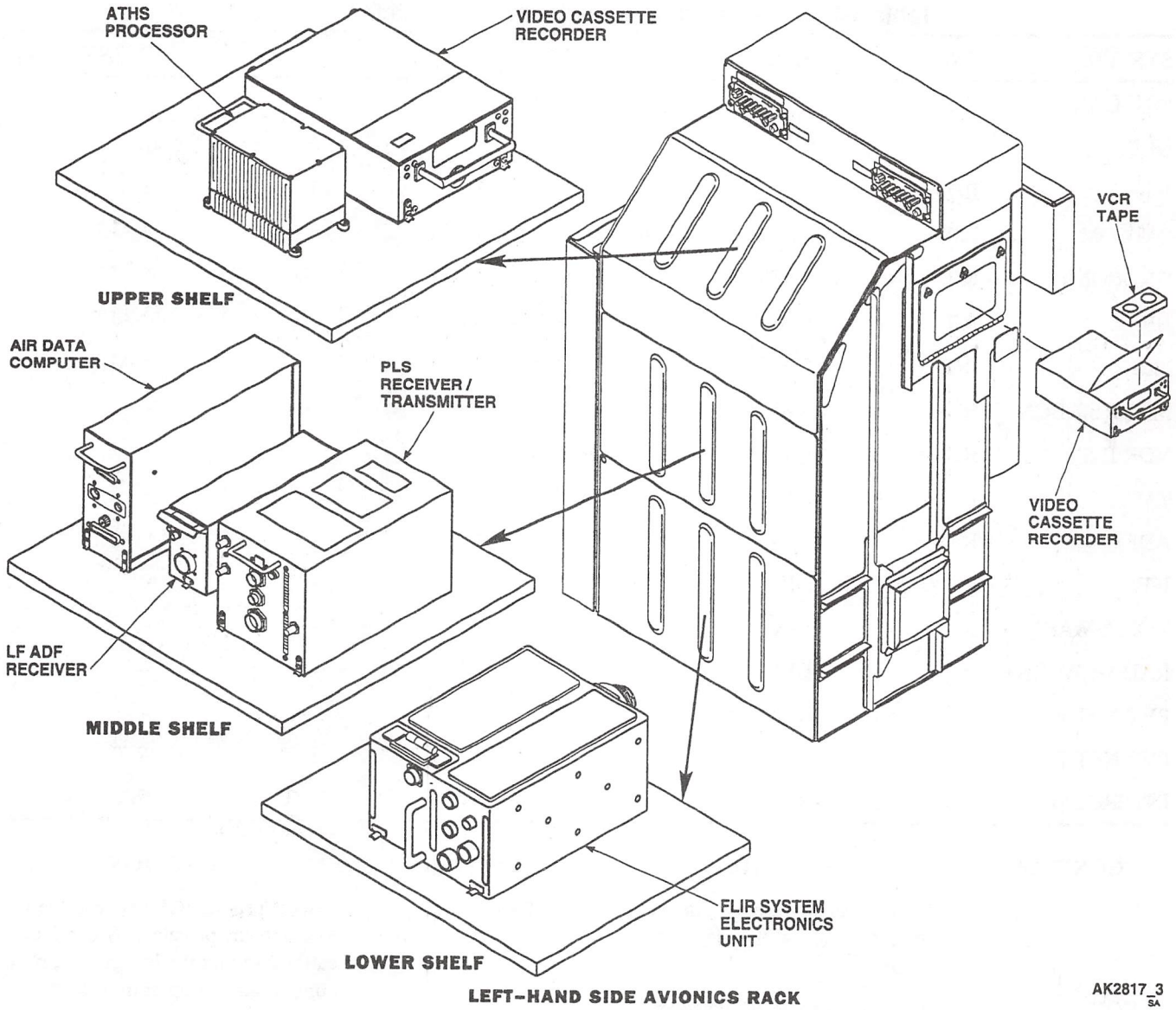

Figure 3-7. Cabin Avionics Racks (Sheet 3 of 3)

CONTROL	FUNCTION
RADIO MON and NAV Push/Pull Rotary Controls	Push to turn on and pull to turn off; rotate to adjust audio level.
1	Controls audio reception level for SINCGARS radio.
2	Controls audio reception level for UHF-AM radio.
3	Controls audio reception level for VHF radio.
4	Controls audio reception level for HF or SATCOM radio.
5	Controls audio reception level for GNDCOM or PLS radio.
A	Controls audio reception level for VOR/ILS and marker beacon identification tones.

Table 3-5. Available Functions of Intercommunication System

SYSTEM	FNCT	PILOT	COPILOT	TR CMD	L-GNR	R-GNR
SINCGARS	R/T	1	1	1	1	1
UHF	R/T	2	2	2	2	2
VHF	R/T	3	3	3	3	3
SATCOM	R/T	4 ALT	4 ALT	4 ALT	4	4 ALT
GNDCOM	R/T	5 ALT	5 ALT	5 ALT	NAV A/R	5 ALT
HF	R/T	4 ALT	4 ALT	4 ALT	4	4 ALT
PLS	R/T	5 ALT	5 ALT	5 ALT	---	5 ALT
MARKER BCN	R	NAV A	NAV A	NAV A	---	---
VOR/ILS	R	NAV A	NAV A	NAV A	---	---
TACAN	R	NAV B	NAV B	NAV B	---	---
ADF	R	NAV B	NAV B	NAV B	---	---
IFF	R	DIR	DIR	---	---	---
VOICE WARN	R	DIR	DIR	---	---	---
RADAR WARN	R	DIR	DIR	DIR	---	---
PVT NET A		R/T	R/T	---	---	---
PVT NET B		---	---	R/T	R/T	R/T
INTERCOM	R/T	R/T	R/T	R/T	R/T	R/T

CONTROL	FUNCTION
B	Controls audio reception level for TACAN and ADF identification tones.
VOX	Controls threshold for voice activation level when VOX ON microphone actuation is selected on by the function selector.
MIC Selector Switch	Two-position rotary switch which allows a crewmember to select type of microphone to be used at the crewmember station.
1	Select when using SPH-4 low impedance (5 ohm) microphone.
2	Select when using SPH-4B high impedance (150 ohm) microphone.
Mode Selector Switch	Eight-position rotary switch for selecting transmit radio, ICS, PVT, or remote (RMT).

CONTROL	FUNCTION
PVT	Selects private ICS between the pilots only or private ICS communications among the left gunner, right gunner, and troop commander.
ICS	Selects normal ICS operations; whereas, all ICS stations receive any ICS communications except those with PVT selected.
1	Selects transmission/reception through the SINCGARS radio.
2	Selects transmission/reception through the UHF-AM radio.
3	Selects transmission/reception through the VHF radio.
4	Selects transmission/reception through the HF or SATCOM radio.

CONTROL	FUNCTION
5	Selects transmission/reception through the GNDCOM or PLS radio.
RMT	Enables RAD SEL and CHAN UP/DN switches on the collective sticks for radio and frequency selections. Available and selected radio and frequency options are displayed at the bottom of the MFDs.
Function Selector Switch	Four-position rotary switch which selects ICS mode of operation.
HOT MIC	Continuous ICS or radio communications without pressing a PTT switch.
VOX ON	ICS automatically keys only while operator is speaking. ICS only function, disable when PVT selection is on.
NORM	PTT switch must press for ICS and radio communications.
ICS OFF	Turns ICS off.
HF Switch/Indicator	Selects HF radio for operation when the CSC mode selector switch is at position 4 of the appropriate pilot/right gunner or copilot/troop commander station.
SAT Switch/ Indicator	Selects SATCOM radio for operation when the CSC mode selector switch is at position 4 of the appropriate pilot/right gunner or copilot/ troop commander station.
GND Switch/ Indicator	Selects GNDCOM radio for operation when the CSC mode selector switch is at position 5 of the appropriate pilot/right gunner or copilot/ troop commander station.
PLS Switch/ Indicator	Selects PLS radio for operation when the CSC mode selector switch is at position 5 of the appropriate pilot/right gunner or copilot/troop commander station.

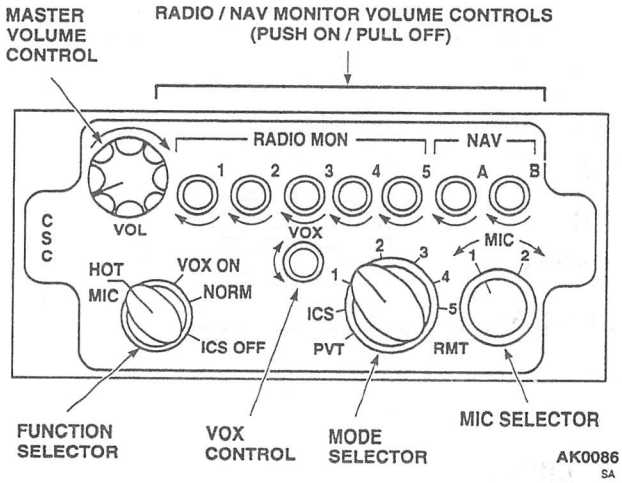

Figure 3-8. CSC Control Panel

3-21. CSC Normal Operation.

1. Turn on all radios required for use.
2. Place CSC function selector, mode selector, MIC, RADIO MON, and NAV switches to the position which enable the present communications requirement.
3. Adjust volume as required.
4. Use PTT switches as required.

3-22. UHF SATCOM Radio System.

NOTE

Power amplifier should only be used for satellite communications. If the SATCOM power amplifier is used during line of sight transmissions of less than 1 mile, the SATCOM receiver of the receiving aircraft/ station can be saturated and communications might be inhibited.

The SATCOM radio set (LST-5C) is a multi-channel radio which provides transmission and reception over 35,000 channels in the range of 225 to 400 MHz in 5 KHz increments. The remote control head (Figure 3-10) is located on the lower center console and the transceiver (portable) is located on the right avionics rack (Figure 3-7). The

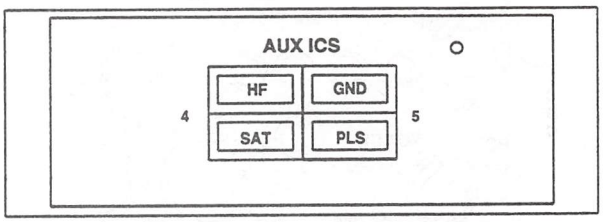

Figure 3-9. AUX ICS Control Panel

SATCOM antenna is located on top of the fuselage above the transition section. Communication is available in both amplitude modulation (AM) mode and frequency modulation (FM) mode. Duplex operation is provided in line-of-sight or via satellite. Duplex operations allow transmission on one frequency and reception on another frequency. Secure communication is provided through a KY-58 unit. The unit has a nine frequency channel memory for storing presets. A built-in modem provides digital data transfer capabilities at 1200 or 2400 baud rate. The SATCOM and KY-58 control panels are located on the lower center console. The maximum output power available without the power amplifier is 5 and 18 watts in the AM and FM modes respectively. When the transceiver is removed from the avionics rack and attached to its portable battery pack, operation is the same as with the remote control unit on the lower console except secure operation and power amplification are not available. The "T" and "R" lights on the remote control unit are covered with black paint for NVG compatibility; however, the lights on the receiver/transmitter unit in the avionics rack are not painted and illuminate during transmissions/receptions. The 28 vdc essential bus supplies power to the receiver/transmitter through a circuit breaker labeled SATCOM R/T CONTR on the upper console circuit breaker panel.

3-23. SATCOM Modes of Operation.

a. AM Mode. The AM mode provides amplitude modulation and two power levels for operation. When in the AM mode, power can only be selected between XLO (2 watts) or XHI (5 watts). When the power amplifier is used, power can only be selected between XLO (12.5 watts) or XHI (50 watts).

b. FM Mode. The FM mode provides frequency modulation and nine power levels for operation. When in the FM mode, power is automatically set to XHI and power can be selected between 2 and 18 watts, in 2 watt increments. When the power amplifier is used, power can be selected between 50 and 140 watts. FM is normally used for transmissions via satellite.

c. Cipher (CT) and Plain (PT) Modes. Secure or plain transmissions are enabled depending on whether cipher or plain mode is selected on the SATCOM KY-58 and the SATCOM remote control panel. If the SATCOM KY-58 is set to the cipher mode, the SATCOM remote control panel must also be set to the cipher mode to receive and transmit encrypted transmissions. Plain mode transmissions can be received while in the cipher mode; however, encrypted transmissions cannot be received while in the plain mode.

d. Scan (SCN) Mode. This mode allows the SATCOM radio to scan between two of the nine preset frequencies. An incoming signal or transmission stops the scan action, scanning is resumed after 8 seconds of no traffic and immediately after a transmission. While scanning, SCAN will be displayed in the LCD and upon transmissions or receptions, the frequency will be displayed.

e. Beacon (BCN) Mode. This mode generate 200 to 3000 HZ signal on the carrier wave for location purposes.

f. Selective Calling (SELCAL) Mode. Selective calling allows a transmission to be received only by those stations with matching selective calling receiver codes. A tone is generated over the receiving station radio for an incoming call. A conference capability is also available through the selective calling mode by entering a "C" instead of a number for the transmit channel. To disable the transmit or receive channel, enter zeros (00) for its value.

g. Modem Mode. The modem capability of the SATCOM radio allows digital data transfer rates at 1200 or 2400 bauds.

h. Display Modes. The display modes allow the entry, changes, and selection of frequencies and modes (Figure 3-13). The following displays are available:

(1) Frequency/Preset Display. This display allows frequency entry and channel assignments. Three dashes --- in place of the three right characters signify that another preset channel can be used to store a frequency. Pressing the MOD while turning on the power switch will zeroize preset frequencies; switch should be held for

approximately 15 seconds or until display shows "225.000 ---."

(2) Configuration Display. This display allows mode and power selection between the top and bottom legends.

(3) Frequency T/R Display. This display allows transmitter and receiver channels to be selected for use.

(4) Selective Calling. This display allows coded entries to alert radios with the proper receiver codes to be alerted of incoming radio traffic.

(5) Modem Display. This display allows establishing the digital data transfer rate (1200 or 2400 bauds).

(6) Power Out Adjust Display. This display allows setting the transmitter power when in the FM mode.

(7) Power Out and Signal Strength Display. This display reflects an indication of the transmitting and receiving signal strength.

i. Alert Tones. The radio provides a number of unique functional tones:

(1) Volume Set Tone - Sounds while the VOL button is pressed when a channel is quiet to indicate the audible volume level.

(2) Low pitched continuous tone - indicates that the present transmission is nearing its preset time limit and will soon be disabled.

(3) Low pitched momentary tone - indicates the attempt to make an invalid keypad entry or attempted transmission during a receive only mode.

(4) High pitched momentary tone - indicates one of the following: that the microphone PTT was pressed and the unit ID is being sent, that a valid key was pressed or a feature configuration state was entered, or reception/transmission in the clear mode on a secure net mode.

(5) One high pitched tone followed by four high pitched tones - indicates that an Emergency Alert or status/message transmission has been acknowledged by the Base Station Controller.

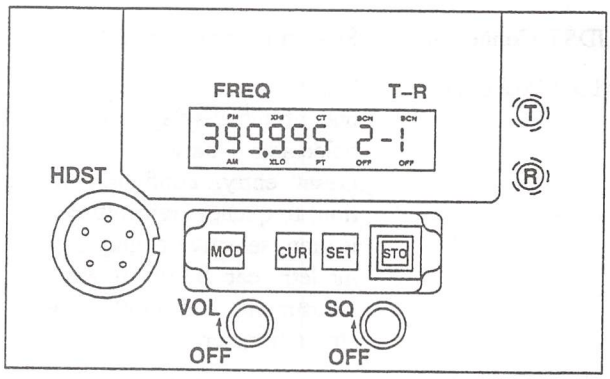

AK0091
SA

Figure 3-10. SATCOM Control Panel

(6) Two high pitched tones - indicate that a Selective Call has been received.

(7) Four high pitched tones - indicate that a Call Alert has been received.

3-24. SATCOM Controls and Functions.

The operating procedures for the SATCOM radio and power amplifier controls are describe in paragraph 3-30, SATCOM Normal Operation.

CONTROL	FUNCTION
T Indicator Light	Illuminates when the transmit mode is active (light is painted black on the remote unit on lower console for NVG compatability).
R Indicator Light	Illuminates when the SQ control is on, but squelch is not active (until rotating knob clockwise until rushing noise ceases and light goes off). It also illuminates when squelch is deactivated by an incoming signal (light is painted black on the remote unit on lower console for NVG compatability).

CAUTION

Using the handset while the power amplifier in on will cause damage to the preamplifier circuit.

CONTROL	FUNCTION
HDST Connector	Six-pin handset connector.
MOD Pushbutton	Pushbutton switch used to select one of the display/control modes. Selectable between: frequency/preset entry, configuration selection, frequency transmit/receive selection, selective calling capability, modem capability, power output adjustment, and power out/signal strength meter.
CUR Pushbutton	Pushbutton switch used to move the cursor position in the display (the cursor position is identified by the flashing alpha or numeric character).
SET Pushbutton	Pushbutton switch used to scroll through the alphanumeric characters (0 thru 9 and A thru Z) and select options on the configuration display. This switch is used extensively with the CUR pushbutton. When the CUR pushbutton is pressed to sequence a field, then the SET pushbutton is pressed to sequence through the alphanumeric characters. However, when the configuration display is shown, this pushbutton selects alternately between the top and bottom selections (i.e., between FM and AM).
STO Pushbutton	Pushbutton switch used to store preset frequencies/channels entered on the frequency/presets display.
VOL/OFF control	Rotary switch used to turn the radio on/off and adjust the radio audio volume.
	NOTE During satellite communications, turn squelch to off or minimum to ensure weak satillete signals are received.
SQ/OFF control	Rotary switch used to turn the squelch on/off and adjust the squelch threshold/level.
Front Panel Illumination	Pressing the MOD and CUR buttons simultaneously, turns the panel lamps on. The lamps turn off ten seconds after the last key stroke automatically.
T Letter	Normally indicates the liquid crystal display (LCD) under this letter as the transmit channel/preset.
R Letter	Normally indicates the LCD under this letter as the receive channel/preset.

3-25. SATCOM Power Amplifier.

NOTE

Power amplifier should only be used for satellite communications. If the SATCOM power amplifier is used during line of sight transmissions of less than 1 mile, the SATCOM receiver of the receiving aircraft/station can be saturated and communications might be inhibited.

A variable 200 watts power amplifier (limited to 140 watts) is provided to boost the output power of the SATCOM radio, enabling a greater communication range capability (Figure 3-11). The SATCOM radio power is amplified by the power amplifier approximately ten times the value established by the SATCOM radio. The power selection should be used on an as required basis to avoid signals from being detected by undesirable stations. The power amplifier is located on the lower center console. The No.2 dc primary bus supplies power to operate the SATCOM power amplifier through a circuit breaker labeled SATCOM AMP on the pilot circuit breaker panel.

3-26. SATCOM Power Amplifier Controls and Functions.

Controls and indicators for the SATCOM power amplifier are shown on Figure 3-11.

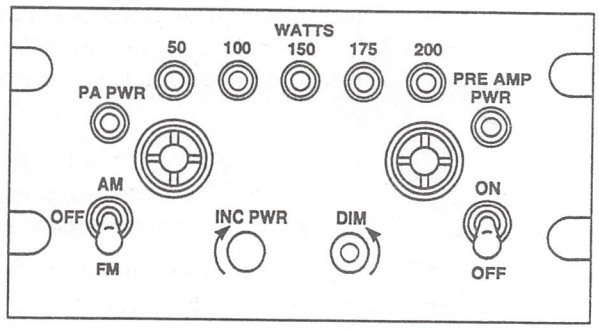

Figure 3-11. SATCOM Power Amplifier Control Panel

CONTROL/ INDICATOR	FUNCTION
WATTS Indicators	Wattage indicator illuminates when the respective power output level is being used (50, 100, 150, 175, or 200 watts). (Note: power amplifier is limited to 140 watts.)
PA PWR Indicator	Illuminates when the power amplifier is on.
PRE AMP PWR Indicator	Illuminates if the preamplifier is on.
AM/OFF/FM Switch	Select power amplifier for AM operation, FM operation, or OFF.
	NOTE
	Transmission power is limited to a maximum of 5 watts if one dc converter is lost and the radar pulse jammer is being used. Reception is not affected.
INC PWR Control	Adjusts the power amplifier output between minimum (50 watts) and maximum (140 watts).
DIM Control	Adjusts the intensity of the indicator lamps and panel illumination from off to full brightness.
ON/OFF Switch	Turns preamplifier power on/off.

3-27. SATCOM KY-58.

The SATCOM KY-58 provides secure voice operation for the SATCOM radio (Figure 3-12). When secure operation is selected, the SATCOM can receive clear as well as secure transmissions. There are five net variable and one remote net variable position. The remote net variable allows air updates via a net control station. When the KY-58 is in the secure mode, audio transmissions are encrypted and receptions are decrypted. The operational code can be zeroized if required. Manual reinsertion of the code is required when all codes have been zeroized. Power to operate the SATCOM KY-58 is provided by the 28 vdc essential bus through a circuit breaker labeled SATCOM SEC KY-58 on the upper console circuit breaker panel.

3-28. SATCOM KY-58 Control and Functions.

Controls for the KY-58 are on the front panel of the unit. The function of each control is as follows:

CONTROL	FUNCTION
MODE switch	Rotary control switch for selecting mode of operation.
P	Selects plain (clear) communications on the SATCOM radio.
	NOTE
	Selecting cipher on the KY-58 control panel does not automatically place SATCOM in the cipher mode. CT must be selected on the SATCOM radio also.
C	Selects encrypted (ciphered) communications on the SATCOM radio.
LD	Selects manual variable loading via the FILL connector.
RV	Selects Remote variable loading via fill switch position 6.
Fill Switch	Rotary control switch for selecting storage registers (1 - 6).
1 thru 6	Selects storage register to be used with radio transmissions. Position 6 is used for receiving key remotely.
Z 1-5	Will zeroize storage registers (1 - 5).

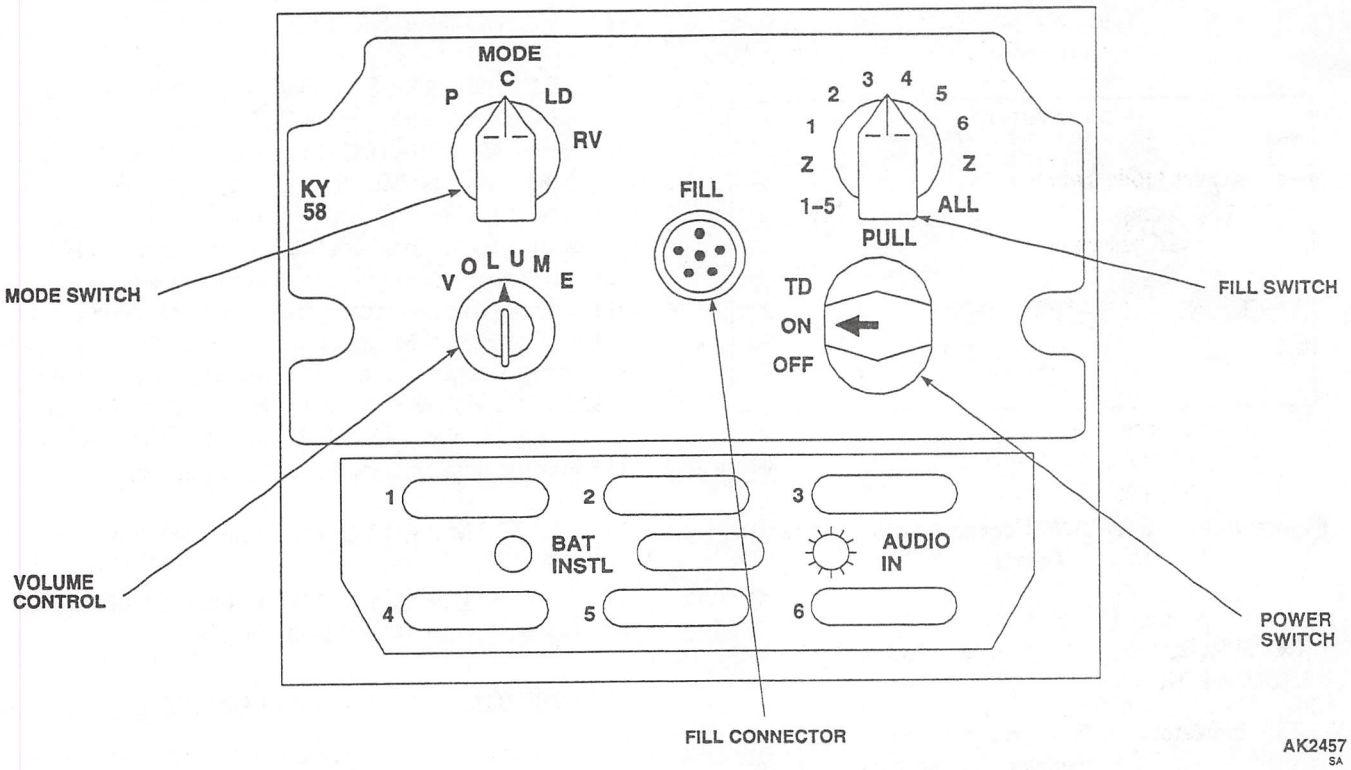

Figure 3-12. SATCOM KY-58 Control Panel

CONTROL	FUNCTION
Z ALL	Will zeroize all storage registers.
Power Switch	
TD	Used for retransmission of incoming signals.
ON	Turns the KY-58 on.
OFF	Turns the KY-58 off.
FILL Connector	Connector for common fill devices.
VOLUME Control	Rotary control used to adjust audio level.

3-29. SATCOM KY-58 Normal Operation.

1. Power switch place at ON position.
2. To load variables, perform the following:
   a. Manual Loading.
      (1) Attach KYK-13 to FILL connector.
      (2) Place MODE switch at LD position.
      (3) Place fill switch to position 1.
      (4) On KYK-13, place fill switch to position 1 and press load switch, load light should flash when variable is transferred to KY-58.
      (5) Repeat steps (3) and (4) for all required positions.
   b. Remote Air Loading.

NOTE

Fill position 6 must be loaded manually to enable remote air loading.

      (1) Request remote loading from net controller.
      (2) Place MODE switch at RV position.
      (3) Once acknowledged by the net controller, follow instructions provided by net controller. The net controller will

use a secure voice channel with directions to stand by for an AK transmission. Transmissions should not be made during this standby action.

3. Set Mode switch to P or C as required. Position C allows the SATCOM radio to select between plain and cipher modes.

4. Adjust volume as required.

NOTE

A single beep will be heard when the mike is keyed for transmission indicating KY-58 is in the ciphered mode.

5. To zeroize KY-58 variables, pull the fill switch and place at Z 1-5 or Z ALL position as required. The ZEROIZE EMERGENCY panel switch will also zeroize the SATCOM KY-58.

3-30. SATCOM Normal Operation.

NOTE

If squelch level cannot be adjusted to a comfortable level using the remote control head, adjust the volume and squelch controls on the SATCOM transceiver in the right avionics rack.

1. Turn VOL control on SATCOM radio remote control panel OFF, clockwise to mid range.

2. Press MOD button until frequency/preset display is present (Figure 3-13).

3. To enter preset channels, perform the following:

   a. Press CUR button until the left most field/character is blinking.

   b. Press SET button until the left most digit of the frequency is displayed.

   c. Press CUR button to advance to the next field/character and is blinking.

   d. Press SET button until the character for this position of the frequency/channel is displayed.

   e. Repeat steps c. and d. until the frequency and channel are entered.

   f. When frequency and channel have been entered, press CUR until no characters are blinking.

   g. Press STO button to store data in radio memory.

   h. Repeats steps a. thru g. for up to nine preset frequencies and channels.

4. Press MOD button until configuration display is present.

5. To select operating mode, perform the following:

   a. Press CUR button until zero is blinking above or below desired mode (i.e., FM or AM).

   b. Press SET button to select mode.

   c. Press CUR button to move right to next mode requiring a change.

   d. Press SET button, then press CUR button until zero is blinking above or below desired mode.

   e. Repeat steps a. thru d. until all available modes are set. (SCN and BCN cannot be selected for operation at the same time. XHI is default for FM mode.)

6. Turn SATCOM KY-58 power switch to ON. If secure voice is required, set KY-58 MODE control to C and select the appropriate variable. With MODE control set at C, the SATCOM radio can change between secure and nonsecure modes. Select P for nonsecure voice transmissions.

7. To select transmitter and receiver frequencies, perform the following:

   a. Press MOD button until Frequency T/R display is present.

   b. Press CUR button until the field/character under T is blinking.

   c. Press SET button until the transmitter channel/preset is displayed.

   d. Press CUR button until the field/character under R is blinking.

e. Press SET button until the receiver channel/preset is displayed.

f. Press CUR button until no characters are blinking.

8. If selective calling is desired, perform the following:

a. Establish frequencies per step 7. above.

b. Press MOD button until SELCAL display is present.

c. Perform step 3a. thru 3f. above to enter transmit and receive codes, respectively.

9. To enter scan mode, select mode as defined in step 5. above and select frequencies per step 7. above.

10. To adjust output power, perform the following:

a. For AM mode, select XLO or XHI per step 5. above and turn on power amplifier to boost power for 2 to 12.5 watts (XLO) or 5 to 50 watts (XHI).

b. For FM mode, perform the following:

(1) Press MOD button until power out adjust display is present.

(2) Press CUR button until the left field/character under R is blinking.

(3) Press SET button until the left digit of the power value is displayed (must be 0 or 1).

(4) Press CUR button until the right field/character under R is blinking.

(5) Press SET button until the right digit of the power value is displayed (must be 2, 4, 6, or 8).

(6) Press CUR button until no characters are blinking.

(7) Turn on power amplifier to boost output power between 50 and 140 watts. As different values are selected via the SATCOM controls, the amplified value will be identified by the WATTS indicators on the power amplifier control panel.

11. If modem operation is required, perform the following:

a. Establish frequencies per step 7. above.

b. Press MOD button until modem display is present.

c. Press CUR button until the 12 or 24 is blinking.

d. Press SET button when desired number is displayed (12 = 1200 and 24 = 2400 bauds).

e. Press CUR button until the ON or OFF is blinking.

f. Press SET button to select as required.

h. Press CUR button until no characters are blinking.

12. To monitor the transmitter and receiver signal strength levels, press MOD button until the signal strength display is present.

13. If transmitting via satellite or using selective calling, turn SQ control on the SATCOM radio to OFF.

14. Set CSC and ICS AUX panel controls as required.

3-31. Ground Communication Radio Set (SABER II).

a. SABER II Radio. The ground communications radio set (GNDCOM, SABER II) is located on the right avionics rack in the cabin compartment and primarily provides two-way communication between ground troops and the troop commander (Figure 3-14). The ground communication antenna is located under the helicopter cabin directly below the main rotor head and to the left of center. The radio set covers the 136 MHz to 174 MHz lower VHF frequency range. Radio frequencies can be displayed as numbers, names, or areas. The GNDCOM radio must be preprogrammed prior to installing in the aircraft. The radio set has an approximate operating range of 20 miles line-of-sight; however, range may increase up to 4 times depending on

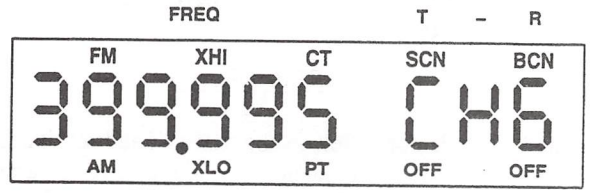

FREQUENCY/PRESETS

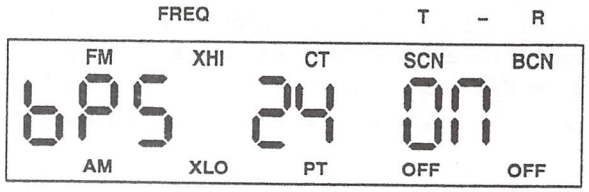

MODEM CONTROL

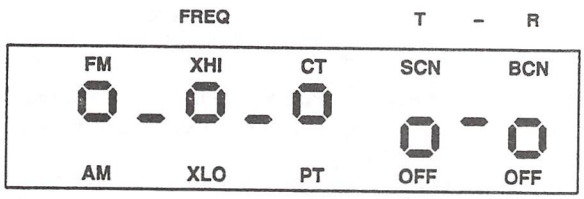

CONFIGURATION

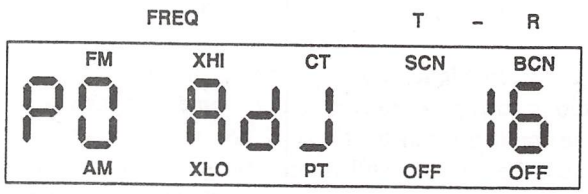

POWER OUT ADJUST

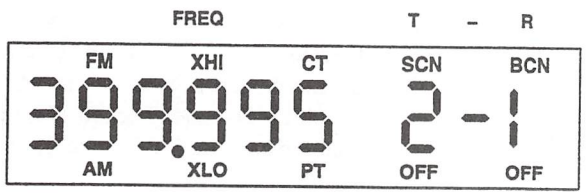

FREQUENCY/T-R

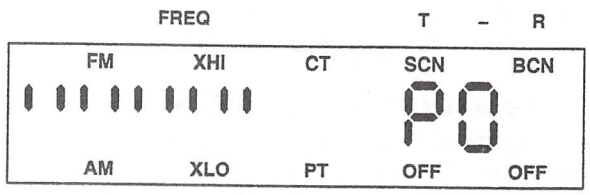

POWER OUT METER

SELECTIVE CALLING (SECAL)

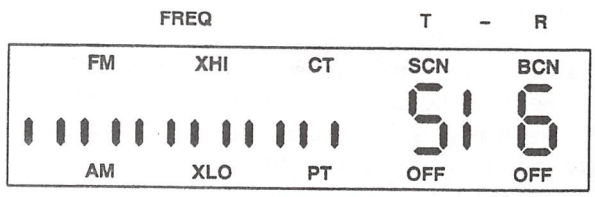

SIGNAL STRENGTH METER

AK2453
SA

Figure 3-13. SATCOM Display Representations

atmospheric conditions. A 60 second timer is activated whenever the transmitter microphone is keyed. Once 60 seconds have elapsed, a tone will be heard on the headset and the PTT switch must be rekeyed to continue a transmission or the radio will automatically stop transmitting.

b. SABER Vehicular Adapter. The ground communications radio set (GNDCOM, SABER II) is placed in the SABER vehicular adapter when used during flight (Figure 3-15). The vehicle adapter provides several controls and indications for the SABER II radio when operating within this adapter. Power to operate the radio set is supplied by the No.2 28 vdc primary bus through a circuit breaker labeled GNDCOM on the pilot circuit breaker panel.

3-32. GNDCOM Modes of Operation.

a. Scan Mode. The scan mode allows the GNDCOM radio to scan between twelve (12) names/channels within a zone for radio transmissions. When a transmission is detected, the receiver will remain tuned to this station. The radio remains at the scanned station until 3 seconds has elapsed without detecting radio transmissions, at which time scanning is resumed. The radio allows the operator to assigned two channels for priority scanning, a first level and a second level priority, all other selected for scanning will be non-priority channels. With the scan mode active, a first level priority call will generate a single tone and a second level will generate dual tones. Selective call channels cannot be assigned as a scan channel. Priority scanning is not available during secure net scanning.

b. Selective Calling. The GNDCOM radio provides a coded transmission option Private-Line (PL) or Digital Private-Line which allows selective station(s) to receive selective calling transmissions. During setup, each selective call transmission name can consists of a frequency and an associated selective calling code.

c. Secure Mode. The radio is capable of handling SECURENET voice encryption. It provides the flexibility to choose either clear or encrypted operation. When the radio is in plain mode and an encrypted signal is received, the radio automatically changes to the secure mode. An alert will sound every 5 seconds if encrytion code has failed or is lost, and the radio is in the voice encrytion mode. If the PPT switch is pressed, an alert tone will sound continuously until the switch is released.

3-33. GNDCOM Controls and Functions.

The following controls and functions are available on the ground communications radio:

CONTROL/ INDICATORS	FUNCTION
	SABER II Radio
Channel Selector Switch	Selects the transmit and receive frequencies, and any operating parameters slaved to each channel position.
On/Off/Volume Control	Turns the radio on/off and adjusts the audio output level.
Emergency Button	Transmits a preprogrammed 2 to 7-tone code, followed by a predefined emergency tone. Transmission can be steered to a preprogrammed channel.
Coded/Clear Selector Switch	Selects whether the radio is sending coded or clear voice transmissions.
Multifunction Light-Emitting Diode (LED)	Indicates normal transmission (continuous red) and channel busy (blinking red).
Monitor Button	Tap to momentarily monitor a channel for voice communications. Press and hold to put the radio in squelch off mode. Tap to return to normal operation.
PTT (Push-To-Talk) Switch	Engages the transmitter/encoder. Pressing the PTT switch also resets the radio's alert tones and transmits the unit I. D. code. The receiver operates when the PTT switch is released.
Antenna	Heliflex or flexible whip with threaded base.
RF Connector	Allows connection of an external antenna or radio test equipment.
Universal Connector	Provides access to the radio for programming and testing; also, allows for connection to remote accessories, such as the public safety microphone.
	SABER II Vehicle Adapter
Connector Actuator Knob	Enables radio insertion/extraction into/from the SABER vehicle adapter.

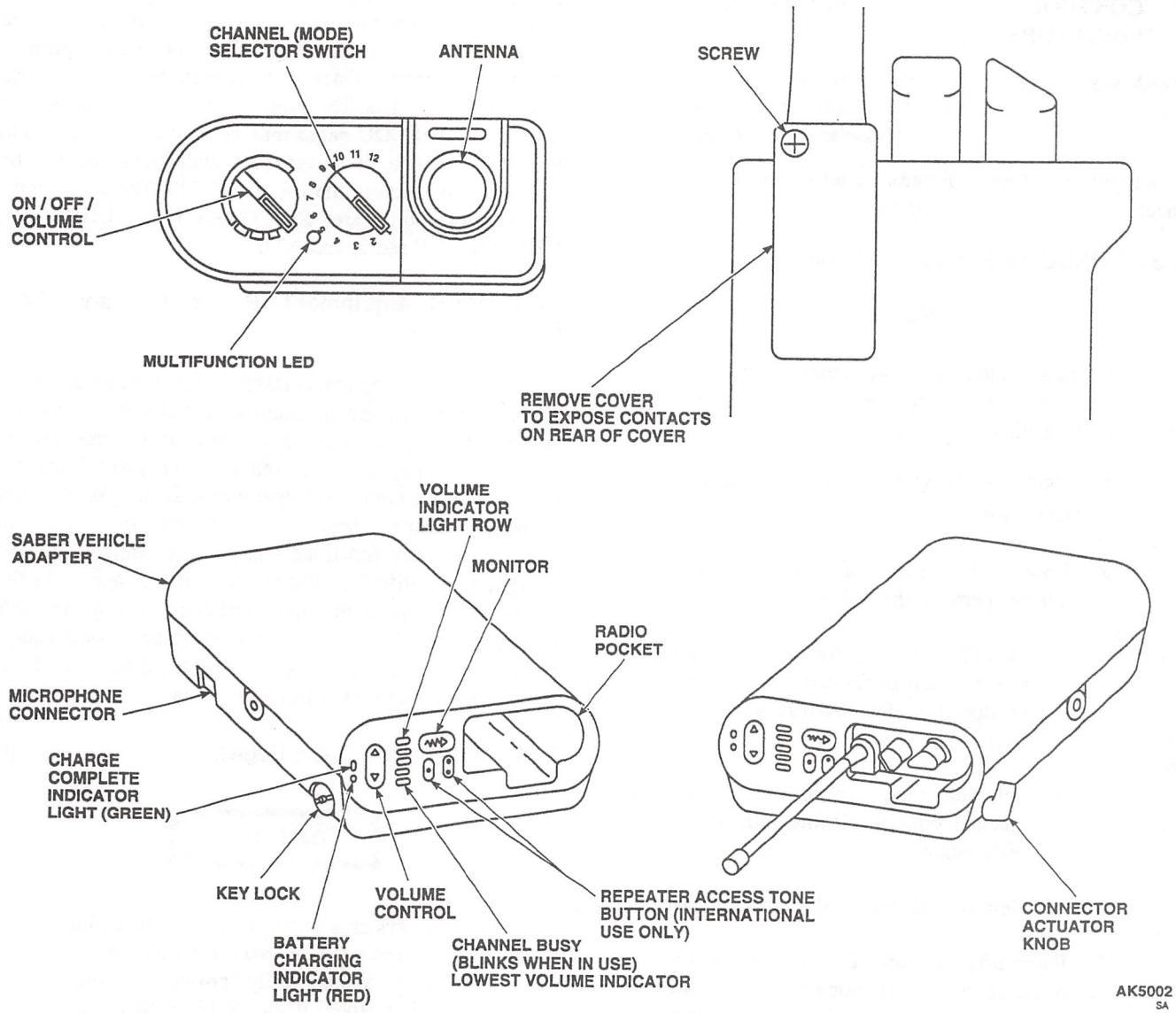

Figure 3-14. Ground Communication Radio (SABER II)

CONTROL/ INDICATORS	FUNCTION
Volume Indicator	Indicates the volume level of the receiver. Top light indicates maximum volume when illuminated.
Volume Controls	Adjust the audio level of the received transmission.
Channel Busy Indicator	The lowest light of the volume indicators is also used to detect busy channels. This light will blink when a selected channel is busy.
Repeater Access Button	For international use only.
Battery Charging Indicators	Indicates the charge/charging status of the SABER II radio battery. Red Light - Indicates radio battery is being charged. Green Light - Indicates radio battery is fully charged.

CONTROL/ INDICATORS	FUNCTION
Lock key	Secures SABER radio in vehicle adapter. Counterclockwise locks and clockwise unlocks radio.
Microphone Connector	External handset (microphone) connection.

3-34. GNDCOM Normal Operation.

NOTE

Changing radio names/channels while in flight must be done by the troop commander or a qualified cabin person.

1. CSC and ICS AUX control panels select GNDCOM for operation.
2. Prior to placing SABER radio into the vehicle adapter perform the following:
   a. On/Off volume control rotate clockwise to turn on radio and adjust volume as required (midposition for SABER vehicle adapter use).
   b. Set radio modes of operation and name/channel prior to placing into SABER vehicle adapter.
   c. Remove the universal connector cover.
3. Place SABER radio into vehicle adapter and rotate connector actuator knob. Lock radio into place by turning the key lock counterclockwise, the key can be removed.
4. SABER vehicle adapter volume control adjust as required. To adjust with no incoming transmissions, press and hold monitor button and adjust audio noise to a comfortable level.
5. Connect external handset to SABER vehicle adapter.

3-35. IASS Controlled Communications.

IASS communications equipment is controlled through the MFDs and CDUs. Communications equipment frequencies, modes of operation, and secure codes can be created on a mission planning station and loaded into the IASS via data transfer module (DTM) prior to boarding the aircraft. Mission data (communications, navigation, and ATHS) are entered into a DTM via a flight plan work station prior to going to the aircraft. Once in the aircraft, the pilot can load all or part of the data. The MFD communications pages and their associated CDU pages may be used to change or add to any of the data. However, communications data can be enter directly without the use of a DTM. The IASS communications radios are: SINCGARS radio, UHF radio, VHF radio, HF radio, and ATHS.

3-36. IASS Equipment Power On and Test Checks.

There are five equipment status pages, one aircraft status page, and three equipment summary pages that monitor and control avionics subsystems and aircraft systems performance. These pages can be used to power on/off, initialize, test, and check equipment operational status. As the pilot sequences through these pages, primarily the equipment status pages, key functions that are not available for the equipment identified by the pointer will not appear in the legend area. Some of the equipment controlled by the IASS is powered on when aircraft power is applied. Some equipment will return to its last operating state, if not turned off, prior to removing power from the aircraft.

3-37. Equipment Status Pages.

CAUTION

Emitter systems should be turned off before the helicopter is powered off; since, the system may automatically power on when power is restored if the WOW switches are bypassed or upon lift-off.

The equipment status pages are used primarily to power on or off aircraft equipment and initialize equipment to regain operation of that equipment upon certain failures (Figure 3-15). However, individual system equipment can be tested for its operational status when a pilot needs to know its status. A pilot selects the system for powering on or off, testing, and/or initializing as required by the mission. These pages are accessible by pressing the MFD T5 (SYST) key, then pressing MFD L3 (EQP STAT) key. The first page of the equipment status appears while subsequent pages are accessible by pressing the R6 (PG➧) key. The CDU default screens for these pages are not normally used when these pages are accessed.

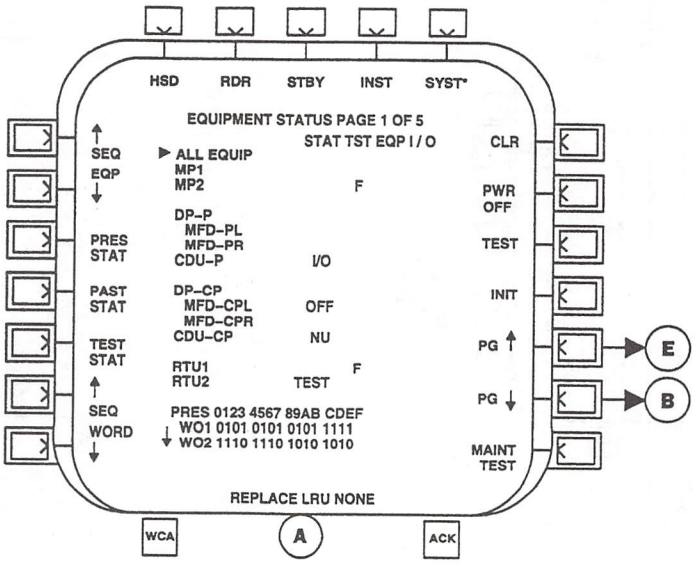

PAGE 1

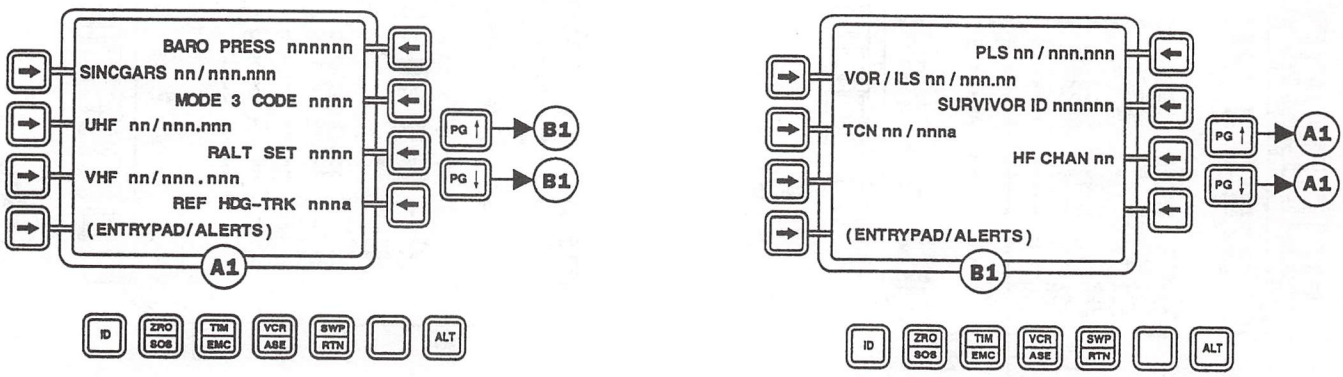

CDU DEFAULT PAGES

AK0123_1
SA

Figure 3-15. MFD Equipment Status Pages (Sheet 1 of 2)

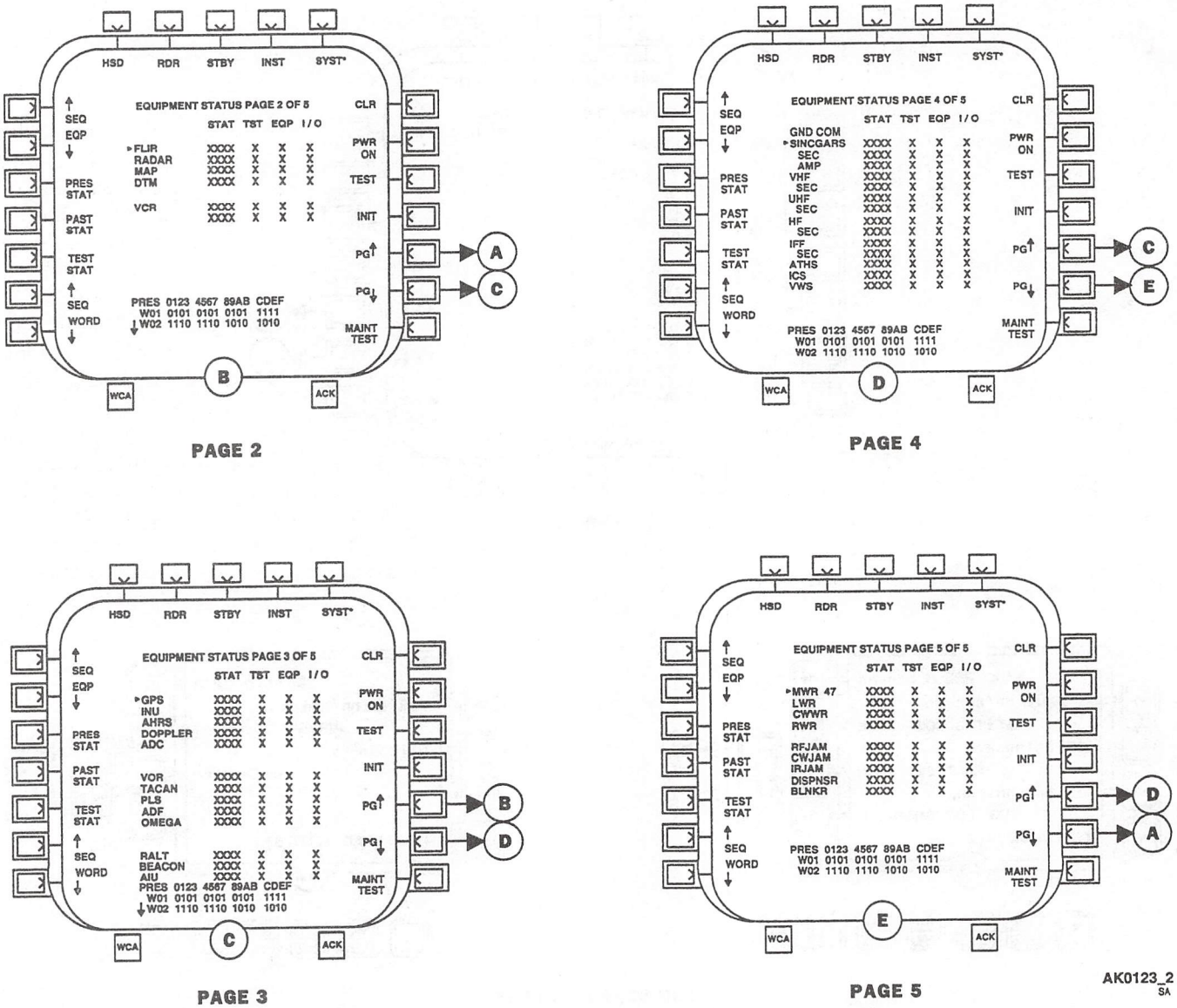

Figure 3-15. MFD Equipment Status Pages (Sheet 2 of 2)

KEY/LEGEND	FUNCTION
	MFD Pages (1 thru 5)
L1 (SEQ▲)	Sequence Equipment Up Key. Press to move the pointer up the page to select equipment.
L2 (EQP▼)	Sequence Equipment Down Key. Press to move the pointer down the page to select equipment.
L3 (PRES STAT)	Press this key to display the present CBIT status code words for the equipment selected by the pointer.
L4 (PAST STAT)	Press this key to display the past CBIT status code words for the equipment selected by the pointer.
L5 (TEST STAT)	Press this key to display the last IBIT status code words for the equipment selected by the pointer.
L6 (SEQ▲)	Status Code Word up key. Press this key to display the previous two status code words.

KEY/LEGEND	FUNCTION
L7 (WORD▼)	Status Code Word down key. Press this key to display the next two status code words.
R1 (CLR)	Press this key twice to clear all the fault counters and erases all past status code words from the system memory for equipment selected by the pointer.
R2 (PWR ON or OFF)	Press this key twice to turn power on or off for equipment selected by the pointer. Selections available: ON and OFF.
R3 (TEST)	Press this key twice to initiate an off-line test of the equipment selected by the pointer.
R4 (INIT)	Press this key twice to start the initialization sequence of the equipment selected by the pointer.
R5 (PG▲)	Press this key to gain entry into the previous MFD page of a multipage display (if one exists).
R6 (PG▼)	Press this key to gain entry into the next page of a multipage display (if one exists).
	NOTE Maintenance test page is accessible only if aircraft has weight on wheel.
R7 (MAINT TEST)	Press this key twice to gain entry into the maintenance test pages. This page allows the pilot to enter basic aircraft weight and boresight values for aircraft performance calculations and INU alignments, respectively.
	CDU Pages (1 and 2)
L1 thru L4 and R1 thru R4	Standard CDU default pages line key entries. Refer to paragraph 3-45, CDU Default Pages, for more details.
	NOTE RTU 1 may display an F in the TEST column after an IBIT. The F may be due to FM homing signal problems; disregard the F in the TEST column if FM homing is functioning properly and RTU 1 status is clear after pressing MFD R1 (CLR) key. Word bits that will be displayed are test status word 4 bits B and D.

a. There are six columns on each page that provide information on the equipment listed on that line after an Initiated Built-In-Test (IBIT) or Continuous Built-In-Test (CBIT) has been performed on that piece of equipment. The second column between equipment name and STAT column has no heading. Code words are also provided at the bottom of the MFD to assist maintenance personnel in identifying problems associated with the equipment adjacent to the pointer. To run an IBIT, select the desired equipment, then press MFD R3 (TEST) key twice. While the IBIT is running, the STAT column will display TEST until the test is complete. When the test is complete, the TST column will show the results of the IBIT. If the selected equipment passes, a blank space will be displayed in the TST column. If the equipment fails, an F will be displayed in the TST column. CBIT monitors equipment during its normal operation and displays failures in the EQP column. The column and character (or abbreviation) definitions are given below:

NOTE

When equipment has experienced a critical failure, it issues a WCA alert and will require corrective action and/or equipment replacement. The critical failure indication will remain in the equipment status tables even if the failure corrected itself.

(1) First column - All the equipment.

NOTE

For RTU 1 and RTU 2, a one (1) or two (2) in the second column is used with DEG in the STAT column to indicate a type of degraded status.

(2) Second column - This column identifies which of the redundant subsystems the information is coming from (e.g., MP1 is primary); this is denoted by a P or a B denoting backup.

(3) STAT column - This column provides the present CBIT status of the equipment. The abbreviation definitions are as follows:

(a) ABRT - Current process has been aborted.

(b) Blank - Indicates normal operation

(c) BAT - Indicates that the subsystem/ equipment battery is low or has failed.

NOTE

If the AFCS CMPTR PWR/RESET light is not illuminated on the AFCS CONTROL panel, "2 DEG" will appear in the STAT column for RTU 1 and 2.

If ENG TEMP for either engine varies about zero (0) degree on the engine instrument page for a period of time during engine cooldown, "2 DEG" will appear in the STAT column for RTU 1 and 2.

(d) DEG - Indicates that the subsystem is operating in a degraded mode (a failure which causes partial loss of equipment capability).

(e) FAIL - Indicates that there is a critical equipment failure (a failure which caused total loss of equipment capability).

(f) HOT - Indicates that the equipment's internal temperature is significantly higher than normal. However, the equipment is still operational.

(g) INHB - Indicates that the particular subsystem's status logging is being inhibited. The present status data is not being collected and the past status data is not being sent to the Data Transfer Module. This would occur when MFD key R2 (INHB STAT) is pressed on the equipment status summary page(s), or when the aircraft power (engines) is coming up/down.

(h) INIT - Indicates that the subsystem is being initialized.

NOTE

If an I/O fault appears under the STAT column, cycling the power off for this piece of equipment for at least three seconds may enable you to restore the equipment to its operational state.

(i) I/O - Indicates that there is a communication failure with the subsystem. (White on color MFDs and inverse video on monochrome MFDs = critical failure, green = noncritical failure/recovered.)

(j) NA - Indicates that the equipment is not available for operation (no RTU provided status information available, RTU OFF, I/O, FAIL, TEST, INIT).

(k) NC - Indicates that the equipment is not configured (not installed).

(l) NU - Indicates that data from the equipment or subsystem is not usable; its data cannot be subsequently processed to support functional performance of the avionics system.

(m) OFF - Identifies that the equipment is OFF (not installed, not responsive, or never electrically powered.

(n) PRLO - Indicates that the subsystem waveguide pressure is low (e.g., MMR).

(o) TEST - Indicates the subsystem is performing its off-line test, or IBIT.

(4) TST column - Lists the results of the last IBIT. The character definitions are as follows:

(a) Blank - Indicates no failure.

(b) F - Indicates that a noncritical failure (a failure which diminished some functional capability and data of the subsystem) was detected by running the off-line (IBIT) test.

(c) F (Reverse Video) - Indicates that a critical failure (a failure which made the subsystem/equipment unusable) was detected by the running of the off-line (IBIT) test.

(5) EQP (equipment) column - It provides the past CBIT status history. The character definitions are as follows:

(a) Blank - Indicates no failures.

(b) F - Indicates that a noncritical failure (a failure which diminished some functional capability and data of the subsystem) was detected by running the on-line (IBIT/ CBIT) test.

(c) F (Reverse Video) - Indicates that a critical failure (a failure which made the subsystem/equipment unusable) was detected by running the on-line (IBIT/CBIT) test.

(6) I/O column - Provides the past CBIT I/O fault history. The character definitions are as follows:

(a) Blank - Indicates no failures.

(b) F - Indicates that a noncritical failure (a failure which caused a partial loss of communication with the subsystem) was detected by the interface test (e.g., wrap-around).

(c) F (Reverse Video) - Indicates that a critical failure (a failure which caused total loss of communication with the subsystem) was detected by the interface test (e.g., wrap-around).

b. The final area of information, at the bottom of the display, consists of the status code words which represent the results of any IBIT or CBIT and the REPLACE LRU operator message. This information is displayed when L3 (PRES STAT) key, L4 (PAST STAT) key, or L5 (TEST STAT) key is pressed. This information provides a bit-level indication of equipment/subsystem status. These code words reflect either present, past, or test status, depending upon which key has been pressed. The REPLACE LRU operator message displays NONE or a number indicating an line replaceable unit (LRU). This information is intended for maintenance personnel to allow them to identify and isolate equipment malfunctions.

3-38. Maintenance Test Page.

NOTE

Aircraft must have weight-on-wheels before access to the maintenance test page is allowed.

The maintenance page allows the pilot/maintenance person to enter basic aircraft weight and INU boresight values (Figure 3-16). The basic aircraft weight default value is 14500 pounds, this value will be used for performance calculations if no other value is entered by the operator and the basic weight that was entered previously has been cleared. The pilot should verify basic weight value prior to each mission to ensure the correct value is been used by the IASS. Boresight values are used by the INU during its alignment process. If the INU fails to display an 8 within 10 seconds after the INIT key is pressed on the navigation initialization page, INU boresight values must be entered, reentered even if the values are present, adjacent to CDU keys R1 (BORE PITCH), R2 (BORE ROLL), and R3 (BORE YAW). Reentering boresight values should correct the alignment problem, if problem is not corrected, notify maintenance personnel.

KEY/LEGEND	FUNCTION
	MFD Page
L1 thru L7 (SEQ◄)	Maintenance personnel use.
R7 (EQP STAT)	Press this key to return to the equipment status page.
	CDU Page 1
L1 (BORE PITCH)	Press to enter the INU pitch value from the entrypad for use during INU alignment. Entrypad data range: -9.9 to +9.9 milliradians.
L2 (BORE ROLL)	Press to enter the INU roll value from the entrypad for use during INU alignment. Entrypad data range: -9.9 to +9.9 milliradians.
L3 (BORE YAW)	Press to enter the INU yaw value from the entrypad for use during INU alignment. Entrypad data range: -9.9 to +9.9 milliradians.
L4	Standard CDU default pages line key. Refer to paragraph 3-45, CDU Default Pages, for more details.
R1 (BASIC AC WT)	Press to enter the aircraft's basic weight from the entrypad for use in performance calculations. Entrypad data range: 12000 to 24500 pounds.
R2 (BASIC LAT CG)	Press to enter the aircraft's lateral cg value from the entrypad. Entrypad data range: -5 to +5 inches (station).
R3 (BASIC LONG CG)	Press to enter the aircraft's longitudal cg value from the entrypad. Entrypad data range: 300 to 400 inches (station).
R4 (MH-60 ETF)	Press to enter the aircraft's engine torque factor value from the entrypad. Entrypad data range: 0.85 to 1.00.

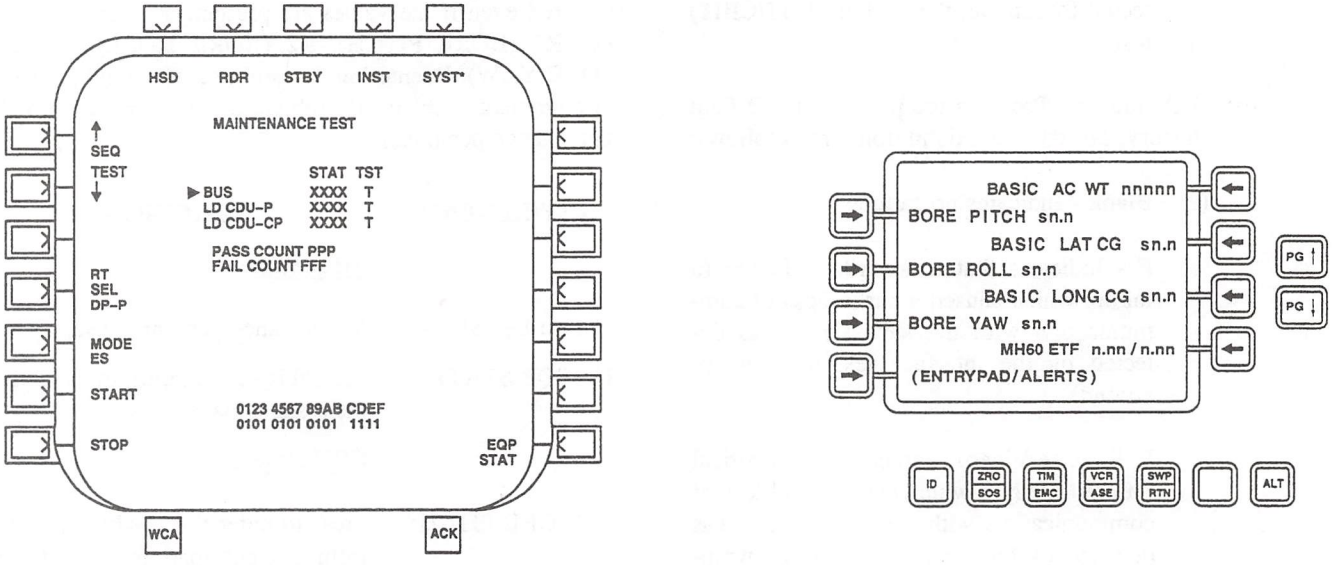

Figure 3-16. Maintenance Test Pages

3-39. Aircraft Status Page.

The aircraft status page provides dynamic monitoring of the temperature of both engines and speed of the main rotor. This page is accessible by pressing the MFD T5 (SYST) key, then pressing MFD L4 (A/C STAT) key. The data on this page are derived from the engine digital electronic control units (DECUs) and is passed by the RTUs to the mission processor for display on the MFDs (Figure 3-17). Each DECU identifies and captures a number of occurrences of overtemperature and/or overspeed, and retain these occurrences in its nonvolatile memory. The MFD aircraft status page information displays only the last event of each type along with the current condition of each DECU as interrogated by the mission processor to identify any problems in these units. The events recorded and displayed in the MFD must be cleared from the mission processor memory once corrective maintenance has been performed. The CDU default pages are displayed when this page is accessed. This is normally a maintenance function; however, should you clear the aircraft status data during flight, it will be transferred by the system into the DTM for postflight maintenance.

KEY/LEGEND	FUNCTION
	MFD Page
L1 (SEQ▲)	Press this key to move arrow up the page to select line item displayed in center of MFD.
L2 (EQP▼)	Press this key to move arrow down the page to select the item displayed in center of MFD.
R1 (CLR)	Clear Key. Press to clear the status shown in the arrow-selected line.
L3 thru L7 and R2 thru R7	Not used.

3-40. WCA Pages.

The IASS continuously monitors its operating status and any changes will be displayed as a warning, caution, or advisory message. Most messages are displayed on the MFDs within the respective message display area (Figure 3-18). However, the WCA pages in the MFDs maintain a

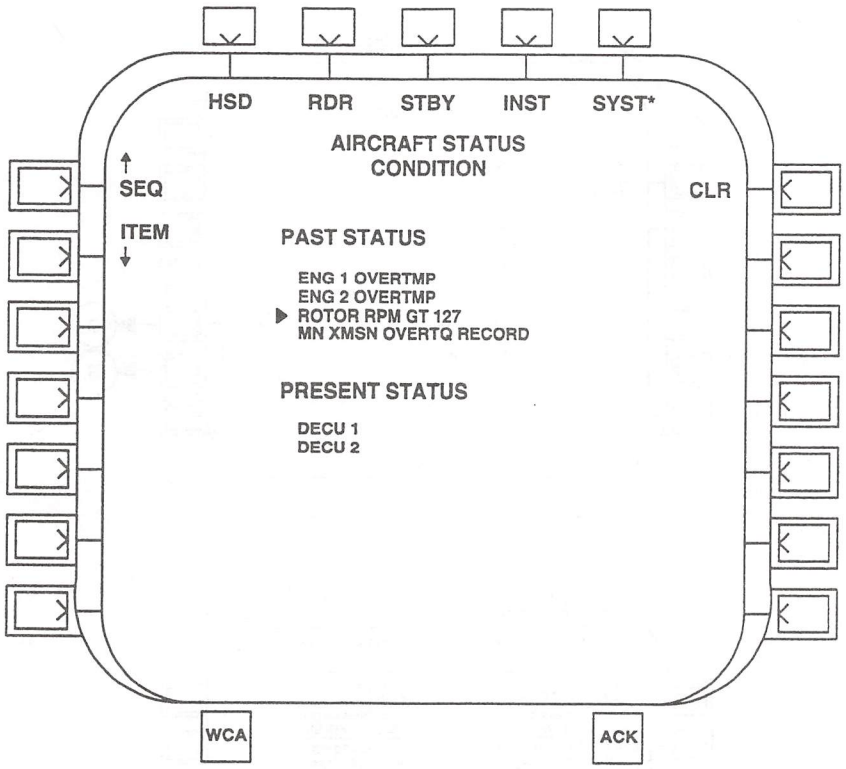

Figure 3-17. MFD Aircraft Status Page

list of the ten most recent active cautions and a grid on selective WCAs. Caution and advisory messages are displayed in green text when inactive. When a caution is active, the entry will be displayed in black text within a yellow box on a color MFD or text within a green box (inverse video) on a monochrome MFD. When an advisory is active, the entry will be displayed in black text within a white box on a color MFD and text within a green box (inverse video) on a monochrome MFD. The number of caution and advisory messages that may be displayed is reduced by selecting combat mode. Combat mode suppresses less critical messages to reduce distraction. A comprehensive assessment of the operational status of the entire IASS can be obtained through the equipment summary pages. The equipment status summary pages are reached from the WCA pages by pressing MFD L2 (EQP STAT SUMM) key. A two-page summary of the status of every component of IASS will appear along with a status code for each component. The CDU default pages are displayed when this page is accessed.

a. Access to the CAUTION SUMMARY page is provided by the MFD WCA key. Pressing this key will cause the CAUTION SUMMARY page to be displayed from any page within the IASS. Once pressed, the ten most recent active caution messages in order of their occurrence will be displayed.

b. The second and third WCA pages are reached by pressing the R6 key (PG➧) or successive depression of the WCA key will display the next WCA page. The second and third WCA pages are grids which contain cautions and advisories. The grid pages contain dedicated caution and advisory messages which indicate to the pilots the status of certain key aircraft systems.

KEY/LEGEND	FUNCTION
	MFD Pages (1 thru 3)
L1 (NORM MODE or CMBT MODE)	Press to select the normal mode (NORM MODE) or combat mode (CMBT MODE) for a display of advisory messages. The combat mode suppresses less critical advisory messages from being displayed in the caution and advisory areas. The combat mode should not be used except when battlefield conditions exist that preclude the use of the normal mode.
L2 (EQP STAT SUMM)	Press to get to the equipment status summary pages.

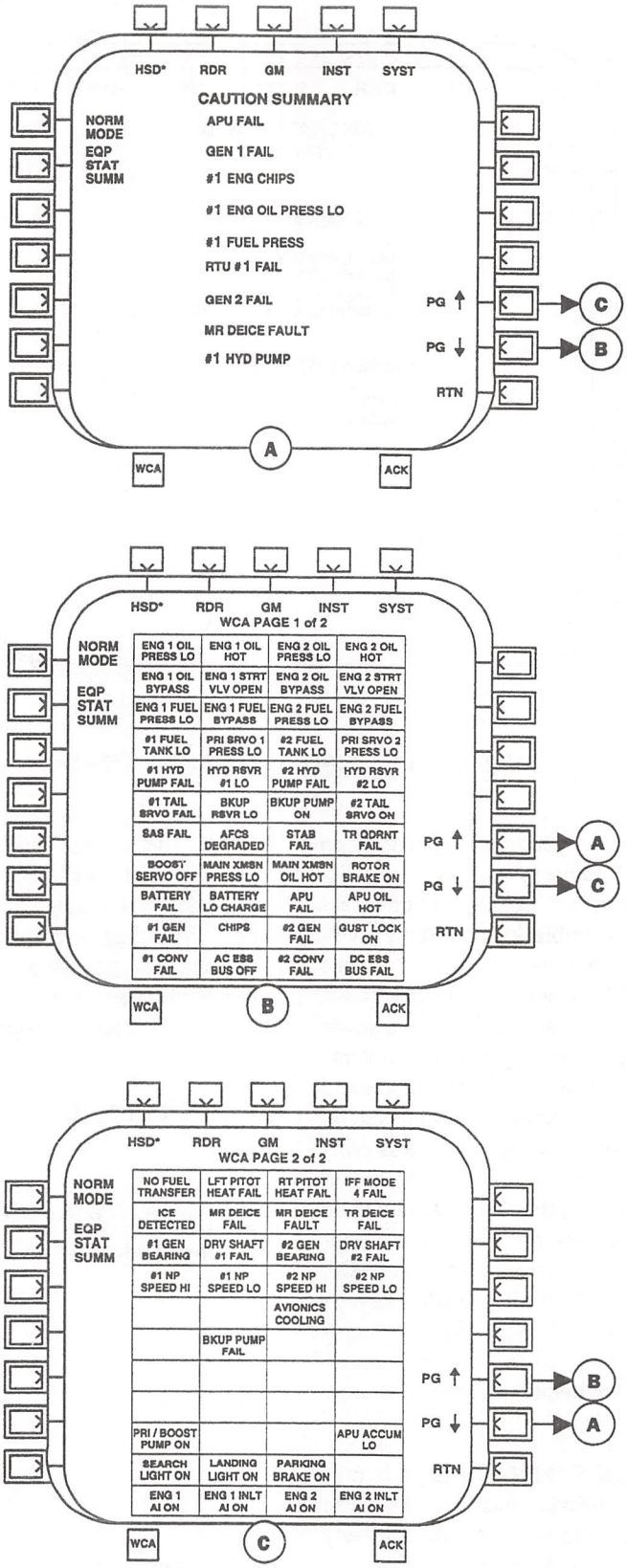

AK0124
SA

Figure 3-18. MFD WCA Pages

KEY/LEGEND	FUNCTION
R5 (PG▲)	Press to get the previous WCA page (if one exists).
R6 (PG▼)	Press to get to the next WCA page (if one exists).
R7 (RTN)	Press to return to the MFD page displayed prior to getting to the WCA pages.
L3 thru L7 and R1 thru R4	Not used.

3-41. Equipment Status Summary Pages.

NOTE

To prevent logging equipment shutdowns as failures, press R2 (INHB STAT) key on equipment status summary page within 50 second of removing ac power from the helicopter. The 1553B I/O status logging will resume within 50 seconds if ac power is not removed from the aircraft.

There are two equipment status summary pages which can be used by either pilots or maintenance personnel to determine quickly the condition of IASS equipment (Figure 3-19). Access to the equipment status summary pages is provided by WCA pages. Pressing the MFD WCA key, then press key L2 (EQP STAT SUMM) key will display page 1 of the equipment summary pages. To verify system integrity or help isolate system problems, these pages can be used to initiate an off-line, system-level IBIT. CBIT provides information to these pages as it continuously monitors the IASS. However, CBIT does not test equipment as thoroughly as IBIT. A more thorough test of all IASS equipment may be run, with the helicopter on the ground, by pressing MFD L1 (OP RDY) key twice. Equipment summary information is displayed in three columns: Page 1 - MSSN MGT (mission management), MSSN AIDS (mission aids), ASE (aircraft survivability equipment); Page 2 - NAV (navigation), COMM (communication), DATA (data recording equipment). The CDU default pages are displayed when this page is accessed. Immediately to the right of the listed equipment is an untitled column which contains a character identifying the status of the equipment. The information within these untitled columns resulting from a IBIT or CBIT test are described below:

1. Blank - Indicates that the equipment is OK.
2. A - Indicates an IBIT or OP RDY has been aborted.
3. B - Indicates the equipment is operating in the backup mode.
4. D - Indicates the equipment operates in a degraded mode (partial capacity).
5. I - Indicates that the equipment is inputting/outputting information.
6. H - Indicates that the equipment is HOT, but is still operational.
7. M - Indicates equipment status recording has been inhibited.
8. O - Indicates that the equipment is OFF (not installed or never electrically powered).
9. T - Indicates that equipment is being tested (manually initiated test [IBIT]).
10. U - Indicates that equipment is unavailable for any condition other than any of the above.

KEY/LEGEND	FUNCTION
	MFD Pages (1 and 2)
L1 OP RDY	Press to start the operations ready (OP RDY) avionics test.
L2 TEST ABORT	Press to abort the OP RDY test.
R1 LOG STAT	Press to log the equipment status information to the data transfer module (DTM).
R2 INHB STAT	Press to inhibit I/O status monitoring for aircraft shutdown.
R5 PG▲	Press to access equipment status summary page 1.
R6 PG▼	Press to access equipment status summary page 2.
R7 RTN	Press to return to the primary HSD, VSD, or HVR page.
L3 thru L7, R3, and R4	Not used.

a. The OP RDY (operations ready) test is an initiated built-in-test (IBIT) for all IASS equipment. The OP RDY test takes about 20 minutes to run. While the OP RDY test is active, an asterisk is shown at the key legend next to the L1 key. As each piece of equipment is tested, a T will

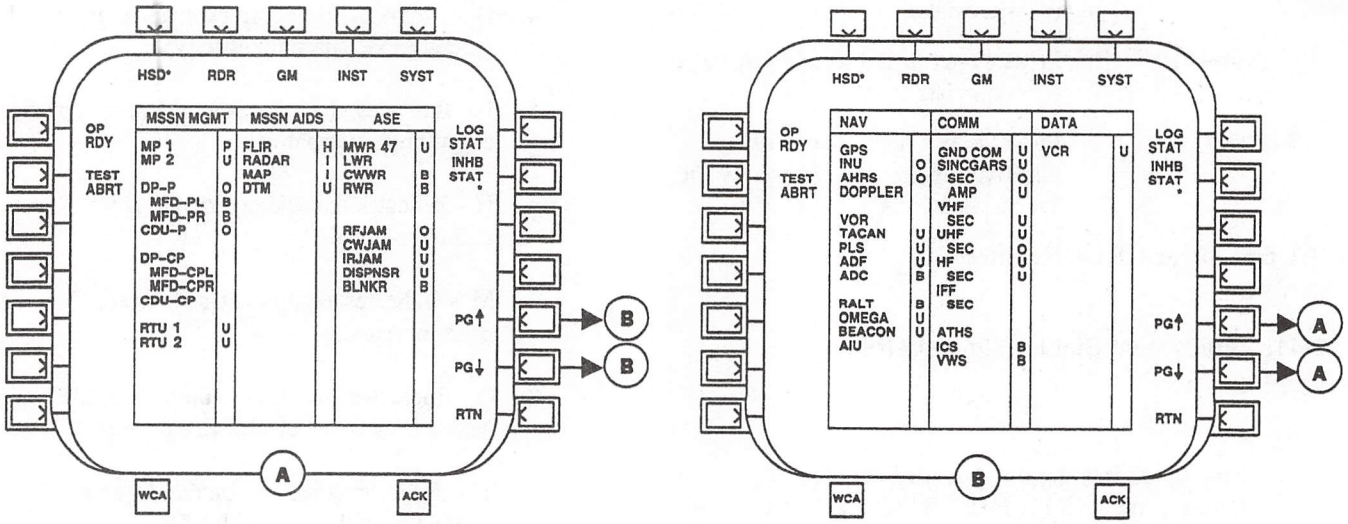

EQUIPMENT STATUS SUMMARY (PAGE 1)

EQUIPMENT STATUS SUMMARY (PAGE 2)

AK0138
SA

Figure 3-19. MFD Equipment Status Summary Pages

appear next to that equipment in the status column. When the test for a piece of equipment is completed, the IBIT resulting status will be displayed. Once OP RDY has started, it can be stopped by pressing MFD L2 (TEST ABRT) key twice; however, testing is completed on the current piece of the equipment before stopping. Completion of a test under way may take more than 15 seconds. Once the OP RDY test is complete, the status columns on both pages should be checked to determine the readiness of the equipment.

b. The status of IASS equipment may be logged to the MDG memory and transferred to the DTM at any time by pressing key R1 (LOG STAT). Up to five status logs may be stored in the MDG. Pressing the R1 key will log the equipment status including the following information: time from start of mission that status is logged, current status, past status, and test status (if applicable) of all IASS equipment listed by line replaceable unit (LRU). Pressing LOG STAT key twice on the equipment summary page should result in the key label disappearing. The IASS verifies that the MDG is operating correctly and that data can be transferred to the DTM. After the MDG and DTM are successfully verified, the IASS transfers LOG STAT data to the DTM and displays LOG STAT in the legend area (transfer takes approximately 10 seconds). If the data, MDG, or DTM fails verification, the LOG STAT key will not reappear and LOG STAT data will be logged in the mission processor buffer. Check/Test MDG and DTM. An IBIT on the DTM may be initiated to ensure data is not corrupted (takes approximately 70 seconds).

3-42. Checklist Menu Pages.

A checklist can be prepared prior to flight (at the mission planning station) and subsequently loaded into the mission processor by way of the DTM. The checklist menu pages allow the pilots rapid access a to list of steps/items in which the crew/mission requires to be entered and followed. This page is accessible by pressing the MFD T5 (SYST) key, then pressing MFD L5 (CHK LIST MENU) key (Figure 3-20). The CDU default pages are displayed when one of these pages is accessed.

KEY/LEGEND	FUNCTION
	MFD Page (Menu List)
L1 (SEQ▲)	Press to move pointer up adjacent to desired selection.

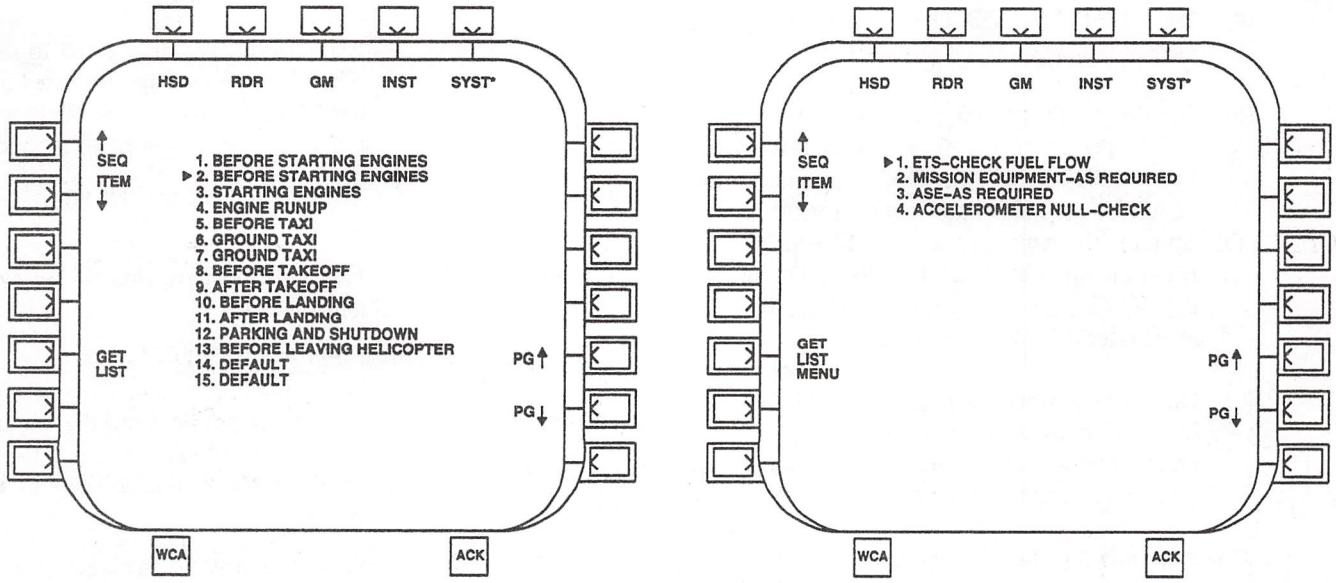

Figure 3-20. MFD Checklist Menu and Menu Control Pages

KEY/LEGEND	FUNCTION
L2 (ITEM▼)	Press to move pointer down adjacent to desired selection.
L5 (GET LIST)	Press to access the checklist adjacent to the pointer.
L4 thru L7 and R1 thru R7	Not used.
	MFD Page (Menu Control)
L1 (SEQ▲)	Press to move pointer up adjacent to desired selection.
L2 (ITEM▼)	Press to move pointer down adjacent to desired selection.
L5 (CHK LIST MENU)	Press to return to the primary checklist page.
R5 (PG▲)	Press to return to the previous checklist page, if one exists.
R6 (PG▼)	Press to access the next checklist page, if one exists.
L3, L4, L6, L7, R1 thru R4, and R7	Not used.

3-43. Data Transfer Module.

Complete communications and navigation mission data can be loaded on a data transfer module (DTM) using a mission planning station. This station normally located within the flight planning area is used to load the DTM(s) of the mission communications and navigation requirements. Once the DTM is loaded with mission data, a pilot can use the DTM to load mission frequencies, navigation reference points, flight plan legs, and map areas for display on MFDs. The DTM is installed into the map display generator which is located on the cabin avionics rack. Flight data can be saved to the DTM for maintenance evaluations. Warnings, Cautions, and Advisories are automatically saved to the DTM. Refer to the mission planning station manual for details on how to build a DTM with mission data during premission planning.

a. Loading preflight data through DTM interface on the map display generator.

(1) Insert and lock DTM in the map display generator.

(2) Enter the cockpit and turn helicopter power on.

(3) When the system is ready, press MFD T5 (SYST) key.

(4) Press MFD L7 (NEXT) key to access system page 2.

(5) On the MFD system page, press R1 (NEW DTM) key twice (an asterisk will appear). (If FUNCTION INOPERATIVE appears at the bottom of the MFD upon key depression, check equipment status pages for MAP/MDG and DTM operational status. If FUNCTION INOPERATIVE does not appear, DTM can be used to transfer data to/from MDG.)

(6) On MFD system page 2, press R2 (MISSN LOAD) key twice (an asterisk will appear). The prepared mission data will begin to load. When loading is complete, the asterisk will disappear.

b. Once the mission data has been loaded, any communications or navigation selection in which the DTM data was prepared will be available, unless a pilot has manually updated or changed the data entries via an MFD.

3-44. HSD, VSD, and HVR Primary Pages.

The primary HSD, VSD, and HVR pages provide access to most IASS systems and limited settings for multiple system functions. Access to the control pages for communications equipment, IFF transponder, navigation radios, MMR, FLIR, map display generator, and flight director electronic and tactical navigation is provided by these pages. The displayed page legend information is determined by MFD T1, T2, and T3 key. T1 selects the type of display reference for the MFD; T2 selects video reference for the MFD display; and T3 selects the mode in which the video system will be operating. Table 3-6 list the HSD, VSD, and HVR system modes available for these keys. Figure 3-21 list the legend key functions for HSD, VSD, and HVR primary pages. The respective CDU pages are the CDU default pages that are described in paragraph 3-45.

KEY/LEGEND	FUNCTION
	All MFD Pages (HSD, VSD, and HVR)
T1 key	Press to access HSD, VSD, or HVR pages.
	NOTE
	If R1 (VID) key is pressed to display video and the system listed under T2 key is not on, the MFD will blink off then on every 10 seconds.
T2 key	Press to select required video system.
T3 key	Press to select required video system mode.
	MFD Page (VSD)
L1 (DCLT 1, 2, or 3)	Press to select between the declutter levels available (1, 2, or 3). Refer to declutter control pages to set levels.
L3 (TF)	Press to activate, deactivate, or arm terrain following mode. (ARM is similar to a standby condition.)
L4 (CALT 100, 150, 200, 300, or 500)	Press L4 key to select radar clearance altitude. Selections available: CALT 100, 150, 200, 300, or 500. One hundred feet not available when operating in the PMGT mode.
L5 (COMM)	Press to access the VHF radio control page.
L6 (IFF)	Press to access the IFF control page.
L7 (F/D)	Press to access the tactical navigation control page.
R1 (VID)	Press to turn on/off the video provided by the system selected under T2 key.
R2 (FOV WIDE or NAR) (FLIR mode only)	Press to select wide or narrow field of view (FOV) for the FLIR system.
R2 (FOV 30, 60, 90 and 120) (MAP 3D mode only)	Press to toggle to between the range values for the MAP PHOTO and 3D modes display area. Selections available: 30, 60, 90, and 120 miles.

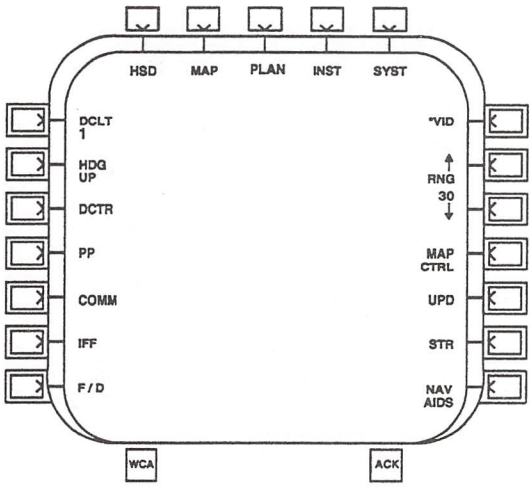

HSD MAP PRIMARY PAGE

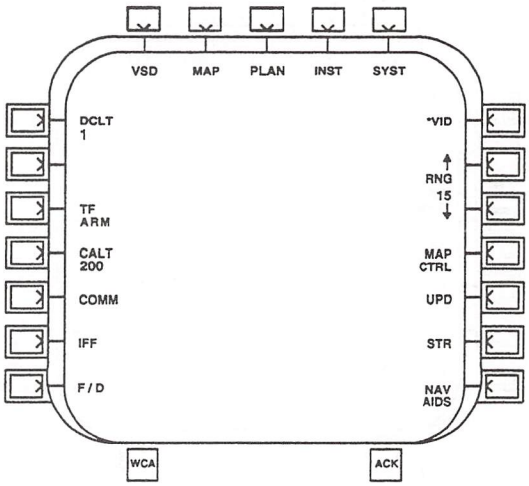

VSD MAP PRIMARY PAGE

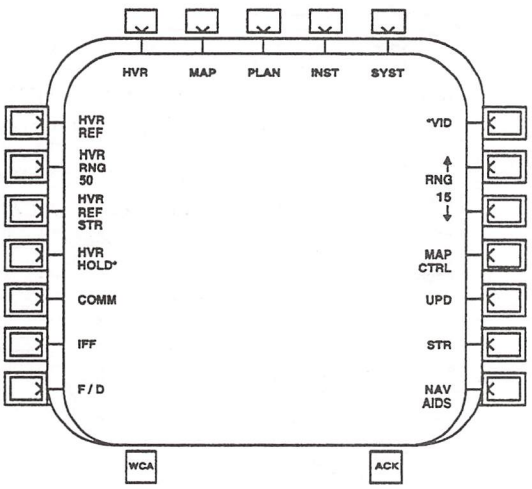

HVR MAP PRIMARY PAGE

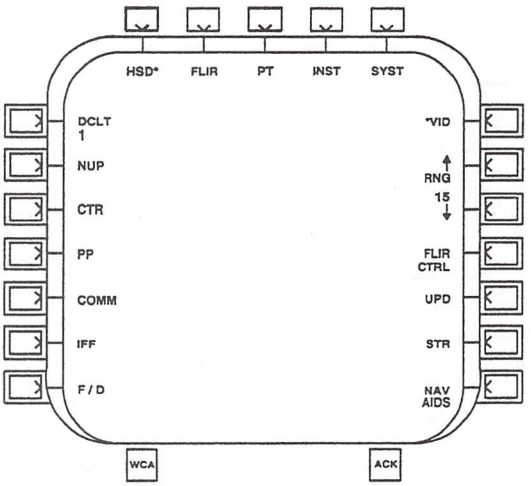

HSD FLIR PRIMARY PAGE

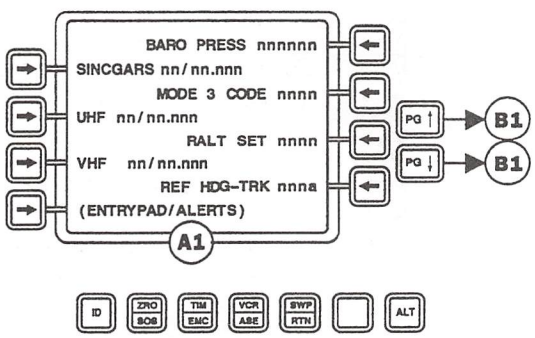

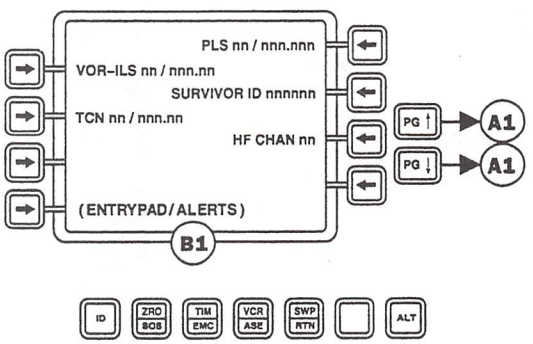

CDU DEFAULT PAGES

AK0137_1
SA

Figure 3-21. HSD, VSD, and HVR Primary Pages (Sheet 1 of 2)

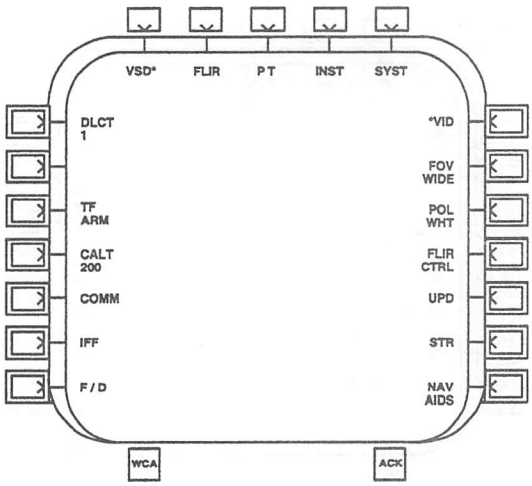

VSD FLIR PRIMARY PAGE

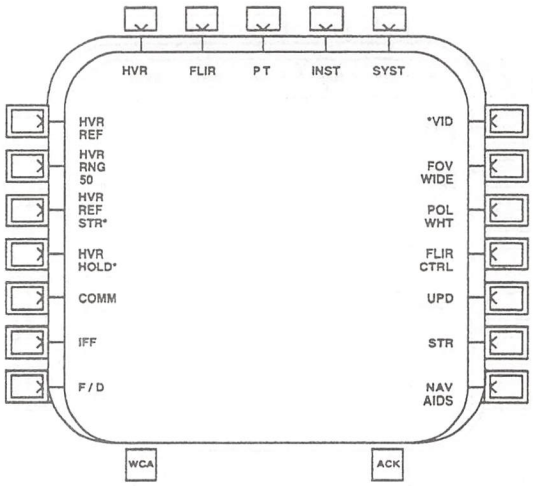

HVR FLIR PRIMARY PAGE

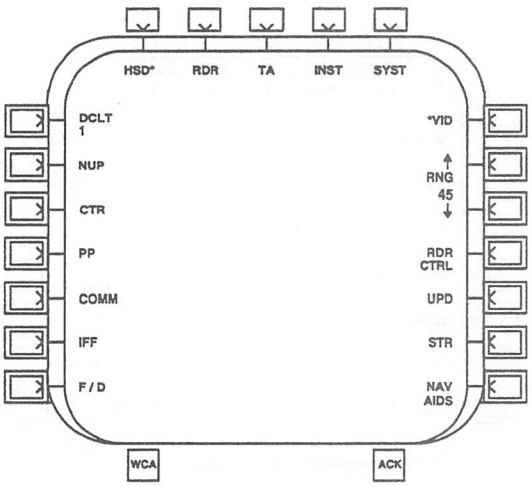

HSD RADAR PRIMARY PAGE

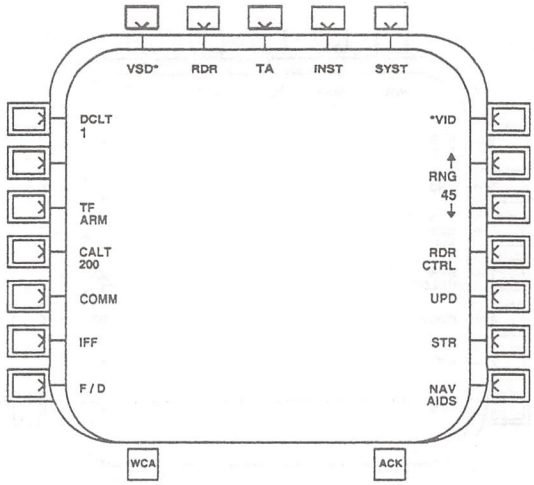

VSD RADAR PRIMARY PAGE

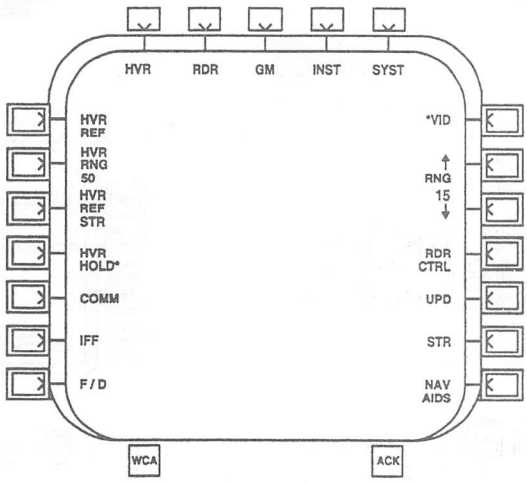

HVR RADAR PRIMARY PAGE

AK0137_2
SA

Figure 3-21. HSD, VSD, and HVR Primary Pages (Sheet 2 of 2)

Table 3-6. Video Systems Modes

T1 KEY (DISPLAY)	T2 KEY (SYSTEM)	T3 KEY (MODE)
HSD	RDR	GM
VSD		TA
HVR		TF/TA
*E2		TF/GM
		MTR
		PMGT
		*AGR
		*STBY
		*EMC
HSD	FLIR	PT
VSD		FPV
HVR		ELEV
		AVT
		SCAN
		*FWD
		*MAN
		*STBY
		*BORE
		*STING
HSD	MAP	3D
VSD		PLAN
HVR		CHART
		PHOTO

NOTE: * Not part of round robin option, but will appear when accessed by different modes.

KEY/LEGEND	FUNCTION	KEY/LEGEND	FUNCTION
R2 (RNG▲) (MAP PLAN, CHART, and RDR mode only)	Press to toggle to a smaller range value for the MFD display. Selections available: 1, 3, 5, 10, 15, 30, and 45 miles. (Available range depends on system and mode selected.)	R3 (1, 2, 5, 10, 15, 30, or 45▼) (MAP PLAN, CHART, and RDR mode only)	Press to toggle to a larger range value for the MFD display. Selections available: 1, 3, 5, 10, 15, 30, or 45 miles. Display range is limited under certain modes which are identified under that mode of operation.
R3 (POL WHT or BLK) (FLIR mode only)	Press to select between type of video being displayed. Hot images will be displayed as white or black video.	R4 (FLIR, MAP, or RDR CTRL)	Press to access the control page for the system selected under T2 key.

KEY/LEGEND	FUNCTION
R5 (UPD)	Press to access the update control page.
R6 (STR)	Press to access the store control page.
R7 (NAV AIDS)	Press to access the NAVAIDS control page.
	MFD Page (HSD)
L1 (DCLT 1, 2, or 3)	Press to select between the declutter levels available (1, 2, or 3). Refer to declutter control pages to set levels.
L2 (NUP, TRK, or HDG UP)	Press L2 (NUP, TRK UP, or HDG UP) key to select desired orientation option for HSD page. This selection determines the orientation direction of the video image represented by the top of the MFD display. All three modes can be used for the map display generator; however, TRK UP should be used for RDR and FLIR. (NUP - North, TRK UP - Course selected or HDG UP - Aircraft heading.)
L3 (CTR or DCTR)	Press L3 (CTR or DCTR) key to select desired HSD display. (CTR - aircraft present position symbol is located in the center of the display; DCTR - aircraft present position symbol is located at lower half of the display.)
L4 (PP)	Press L4 (PP) key to display present position information at the bottom of the display (asterisk appears when display is active).
L5 (COMM)	Press to access the VHF radio control page.
L6 (IFF)	Press to access the IFF control page.
L7 (F/D)	Press to access the tactical navigation control page.
R1 (VID)	Press to turn on/off the video provided by the system selected under T2 key.
R2 (RNG▲)	Press to toggle to a smaller range value for the MFD display. Selections available: 1, 3, 5, 10, 15, 30, and 45 miles. (Available range depends on system and mode selected.)
R3 (1, 3, 5, 10, 15, 30, and 45▼)	Press to toggle to a larger range value for the MFD display. Selections available: 1, 3, 5, 10, 15, 30, and 45 miles. Display range is limited under certain modes which are identified under that mode of operation.
R4 (FLIR, MAP, or RDR CTRL)	Press to access the control page for the system selected under T2 key.
R5 (UPD)	Press to access the update control page.
R6 (STR)	Press to access the store control page.
R7 (NAV AIDS)	Press to access the NAVAIDS control page.
	MFD Page (HVR)
L1 (HVR REF)	Press to enable or disable display of the hover NRP symbol.
L2 (HVR RNG 50, 100, 200, or 400)	Press to select the range scale for hover display. Selections available: HVR RNG 50, 100, 200, or 400 feet.
	NOTE HVR REF STR is disengaged and unavailable for selection when airspeed is greater than 44 KIAS.
L3 (HVR REF STR)	Press to activate current aircraft position as the hover NRP reference point.
L4 (HVR HOLD)	Press to activate hover hold using current aircraft conditions.
L5 (COMM)	Press to access the VHF radio control page which also provides selections for other radio control pages.

KEY/LEGEND	FUNCTION
L6 (IFF)	Press to access the IFF control page.
L7 (F/D)	Press to access the tactical navigation control page.
R1 (VID)	Press to turn on/off the video provided by the system selected under T2 key.
R2 (FOV WIDE or NAR) (FLIR mode only)	Press to select wide or narrow field of view (FOV) for the FLIR system.
R2 (FOV 30, 60, 90 and 120) (MAP 3D mode only)	Press to toggle to between the range values for the MAP PHOTO and 3D modes display area. Selections available: 30, 60, 90, and 120 miles.
R2 (RNG▲) (MAP PLAN, CHART, and RDR mode only)	Press to toggle to a smaller range value for the MFD display. Selections available: 1, 3, 5, 10, 15, 30, and 45 miles. (Available range depends on system and mode selected.)
R3 (POL WHT or BLK) (FLIR mode only)	Press to select between type of video being displayed. Images will be displayed as white or black video.
R3 (1, 2, 5, 10, 15, 30, or 45▼) (MAP PLAN, CHART, and RDR mode only)	Press to toggle to a larger range value for the MFD display. Selections available: 1, 3, 5, 10, 15, 30, or 45 miles. Display range is limited under certain modes which are identified under that mode of operation.
R4 (FLIR, MAP, or RDR CTRL)	Press to access the control page for the system selected under T2 key.
R5 (UPD)	Press to access the update control page.
R6 (STR)	Press to access the store control page.
R7 (NAV AIDS)	Press to access the NAVAIDS control page.

3-45. CDU Default Pages.

The CDU will display a system default page when an MFD page is displayed that does not require a discrete CDU page (Figure 3-22). There are two system default pages, the second page is reached by pressing the PG▼ key on the CDU when the first page is being displayed. These pages display the current frequency/channel for the SINCGARS, VHF, UHF, VOR-ILS, PLS, and TACAN radios. In addition to radio frequencies/channels, survivor identification code, mode 3 IFF code, and barometric pressure is displayed. These pages also allow assigning a new frequency, channel/preset, entry, or code for the available radio/entry. Whenever an MFD page is displayed and the CDU default page is displayed along with it, only the MFD page will be shown on the figure with the reference statement in the descriptive text. Therefore, the pilots should become very familiar with the operation of these pages, since they are displayed more often than others. When the CDU default page appears, the current setting for the legend radios/equipment will be displayed. Through these pages, the information regarding the radios/entries can be added or changed. Changes and additions can be made using the alphanumeric keys on the CDU, once the correct format for a line key field has be entered in the entrypad, pressing the adjacent line key will enter that data into its field. If the correct format and parameters are used, the data is accepted or an illegal action message is displayed in the entrypad. To clear entrypad data, press the ALT key, then press the CLR key. The operation of L4 key is standard for all CDU pages. The following functions are available on the CDU default pages:

KEY/LEGEND	FUNCTION
	NOTE To enter a channel/preset number for radio tuning, a frequency must be assigned to the channel number on the respective radio frequency list page within the MFD.

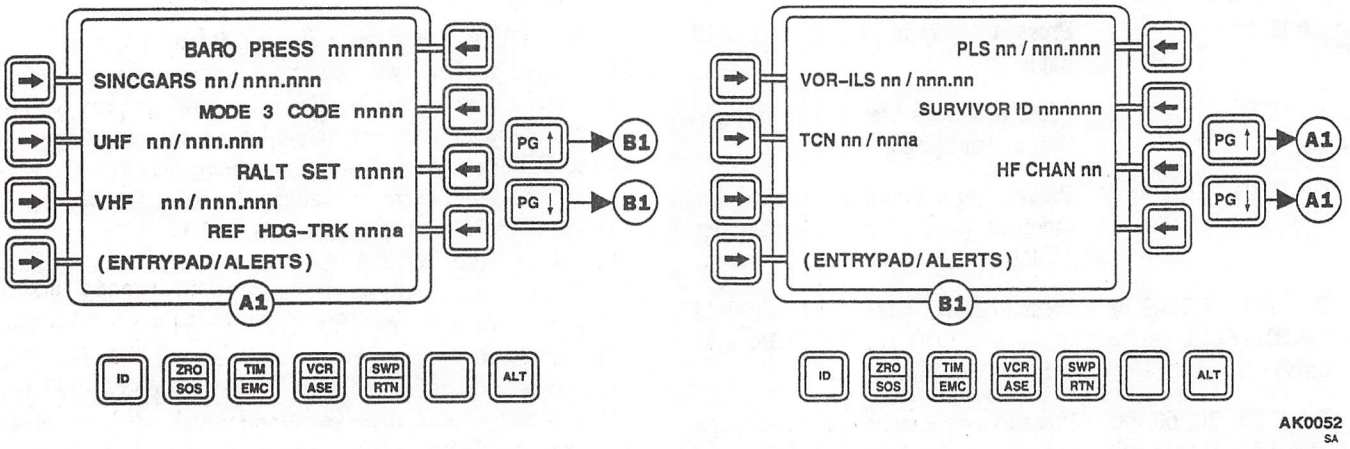

Figure 3-22. CDU Default Pages

KEY/LEGEND	FUNCTION
	CDU Page 1
L1 (SINC GARS)	Press to enter the channel/preset or frequency from the entrypad for the SINCGARS radio. Entrypad data range: channel/preset 0 to 20 (0 is used to return to previous frequency) or VHF- FM - 30.000 to 87.975 MHz (in 0.025 MHz increments).
L2 (UHF)	Press to enter the channel/preset or frequency from the entrypad for the UHF radio. Entrypad data range: channel/preset 0 to 20 (0 is used to return to previous frequency) while channel/preset 21 is used to activate HAVE QUICK (frequency hopping capability) or frequency 225.000 to 399.975 MHz (in 0.025 MHz increments).
L3 (VHF)	Press to enter the channel/preset or frequency from the entrypad for use with the VHF radio. Entrypad data range: channel 0 to 20 (0 used to return to previous frequency); VHF-FM - 30 to 87.975; and VHF-AM 108.00 to 173.975 MHz tunable in 0.025 MHz increments.
L4 (Entrypad/Alerts)	Allows pilot to enter data for L1 through L3 and R1 through R3, store and recall data, and displays alerts when data is entered incorrectly. Pressing L4 key moves the cursor to the first data entry field of the entrypad. Data must be entered in the format of the line key field in which the data will be displayed or processed. Data field characters have the following meaning: n - Consecutive "n" entries require numerical character entry for this field. a - Consecutive "a" entries require alphabetical character entry for this field. anan - Alphanumeric characters can be mixed within this field in any order; however, an alphabetical character normally must begin this entry field.

KEY/LEGEND	FUNCTION
	/ - Used to separate entries (e.g., the channel and frequency). Some entries require both field to be entered and some entries will allow only one field to be entered, normally radio allow only one field to be entered. When both fields are required for an entry (e.g., coordinates - N01.00.00/E001.00.00), the diagonal line must entered to separate the fields. A single field does not required a diagonal separator as in channel or frequency entry.
	. - Used to separate the fractional portion of numbers as in frequencies and to separate degrees, minutes, and seconds as in coordinates.
	# - Indicates pilot override feature for this key entry is active.
R1 (BARO PRESS)	Press to enter the barometric pressure value from the entrypad for system use. Entrypad data range: 26.00 to 34.00 inches or 800.0 to 1160.0 millibars.
R2 (MODE 3 CODE)	Press to enter the IFF code from the entrypad for IFF Mode 3 operation. Entrypad data range: 0000 to 7777 octal, seven being the highest digital number acceptable for this field.
R3 (RALT SET)	Press to enter the radar altimeter altitude value from the entrypad. The pilots will be alerted when the aircraft reaches altitude as indicated by the radar altimeter. Entrypad data range: 0001 to 5000 feet; however, the pilot must enter a value between 0001 and 1500 feet due to the limitation of the radar altimeter.
R4 (HDG-TRK)	Press to enter the heading/track from the entrypad for the heading select mode. Entrypad data range: 000M to 360M (magnetic degrees) or 000T to 360T (true degrees).

KEY/LEGEND	FUNCTION
	CDU Page 2
L1 (VOR-ILS)	Press to enter the frequency from the entrypad for the VOR-ILS radio. Entrypad data range: 108.00 to 117.95 MHz (in 0.05 MHz increments).
L2 (TCN)	Press to enter the channel and/or frequency from the entrypad for the TACAN radio. Entrypad data range: channel - 0 to 20; frequency - 001X to 126X or 001Y to 126Y.
L4 (Entrypad/Alerts)	See L4 under Page 1 description.
R1 (PLS)	Press to enter the channel/preset and/or frequency from the entrypad for the PLS radio. Entrypad data range: channel - 0 to 20; or frequency - 225.000 to 300.000 MHz (in 0.025 MHz increments).
R2 (SURVIVOR ID)	Press to enter the code from the entrypad for the survivor radio identification code. Entrypad data range: 000.000 to 999.999.
R3 (HF CHAN)	Press to enter the channel/preset from the entrypad for the HF radio. Entrypad data range: 1 to 20.
L3 and R4	Not used.

3-46. SINCGARS Radio Set.

The VHF-FM single channel ground and airborne radio system (SINCGARS, AN/ARC-201(V)) provides voice and data communications, in both plain and cipher text in single channel (SC) or frequency hopping (FH) modes of operation. The FH mode provides anti-jam (ECCM) capability for the radio system. This capability, coupled with the security supplied by its KY-58 interface, provides for virtually invulnerable communications in the VHF-FM band. The SINCGARS radio provides FM and external modem communications in the frequency range of 30.000 to 87.975 MHz in 25 KHz increments. The selected channel frequency can also be fine-tuned in -10, -5, 5, and 10 KHz increments. The radio set is capable of transmitting and

receiving on an emergency frequency of 40.500 MHz. The system consists of the RT-1478A/ARC-201A(V) receiver/transmitter, CV-3885/ARC-201(V) data rate adapter, AM-7189A/ARC FM variable power amplifier, and CY-8515/ARC-201(V) battery box. All four of these components are located in the transition compartment. The receiver/transmitter is a 1553B bus compatible unit which is under the control of the mission processor based upon pilot inputs made through the MFD and CDU. In order to utilize the frequency hopping mode, the receiver/transmitter must be loaded with data from a fill device. For proper interface to the ATHS and KY-58, a data rate adapter is employed to convert and condition signals. The 1553B bus compatible FM variable power amplifier provides additional output power capabilities for optimum SINCGARS radio transmissions. When power is removed from the system, a battery box consisting of five C-cell batteries is provided to maintain information stored in the receiver/transmitter. Three transmitting power levels are available: high (40 to 56 watts), medium (12 to 19 watts), and low (3.5 to 7 watts). Power for the AN/ARC-201 radio is provided by the No.2 dc primary bus through a circuit breaker labeled NO.1 VHF R/T, on the cabin overhead circuit breaker panel.

a. Advisories associated with the SINCGARS radio are SCAN LOCK CHAN XX, SINC TEST FAIL, SINC SEC TEST FAIL, SINC AMP FAIL, SINC FAIL, and SINC SEC FAIL. When the SCAN function is activated by the pilot, the SCAN LOCK CHAN XX advisory is displayed if the radio detects activity on a scan channel. This advisory is displayed for two seconds while the SINCGARS is locked on a channel. When IBIT has been initiated by the pilot, the mission processor monitors the SINCGARS radio for proper self-test sequence. If the unit fails the self-test, the SINC TEST FAIL advisory is displayed on the MFD. Also, the mission processor monitors for proper operation of the SINCGARS KY-58 interface circuitry in the RTU. If the RTU interface circuitry fails, then the SINC SEC TEST FAIL advisory is displayed on the MFD. Should the variable power adapter fail during normal operation, the SINC AMP FAIL advisory will be displayed on the MFD. The SINC FAIL advisory is displayed when the SINCGARS radio fails while in its normal operating state. The SINC SEC FAIL advisory is displayed when the SINCGARS KY-58 interface circuitry in the RTU fails while in its normal operating state. When the KY-58 is not installed, the status code NC (not configured) and the letter O (off) are displayed by the SINCGARS SEC legend on the equipment status and equipment status summary control layers respectively.

b. Annunciators associated with the SINCGARS radio are SINCGARS CUE and HOLD MEM ACTIVE. The SINCGARS CUE annunciator is displayed on any flight symbology display page and a tone will be heard when the SINCGARS radio receives a transmission on its cue frequency while in the frequency hopping mode. The HOLD MEM ACTIVE annunciator is displayed on any flight symbology display page. It is displayed for 3 seconds if the SINCGARS radio has received a hopset or lockout from another SINCGARS radio during remote loading.

c. Operator information alerts associated with the SINCGARS radio are SINCGARS SEQUENCE ERROR, SINCGARS TOD REQUIRED, SINCGARS ZEROIZE FAIL, RADIO BUSY, ILLEGAL ACTION, and FUNCTION INOPERATIVE. The SINCGARS SEQUENCE ERROR alert is displayed if the IAP does not receive the expected response from the SINCGARS radio when performing an operation. The SINCGARS TOD REQUIRED alert is displayed if an electronic remote fill (ERF) send is attempted when the SINCGARS radio does not have a time of day. The SINCGARS ZEROIZE FAIL alert is displayed if a SINCGARS erase or COMM PLAN erase is performed and the SINCGARS radio is not completely zeroized. The RADIO BUSY alert is displayed if a SINCGARS function key is selected when the IAP is processing another function of the SINCGARS. An ILLEGAL ACTION alert is displayed if the pilot attempts to perform a function that is not valid for the current state of the SINCGARS. The FUNCTION INOPERATIVE alert is displayed if a SINCGARS key that results in data output to the radio is pressed and the radio is unusable or if the SINCGARS KY-58 is not usable and a function that results in output of data to the SINCGARS KY-58 is selected.

d. A total of twenty preset channels can be stored in the mission processor for SINCGARS operation. These preset channels are maintained in the SINCGARS frequency list. The SINCGARS frequency list contains the channel number with its corresponding frequency, KY variable, clear/secure mode, scan selection, and application. This list can be entered manually through the MFD/CDU or it can be loaded via the DTM with the LOAD COMM function key. Preset channels are stored in non-volatile memory; therefore, not affected by power interruptions. Channel zero is selectable via the CDU and when entered, configures the SINCGARS radio to the previously selected channel or frequency. If a channel was previously tuned, the SINCGARS KY-58 will also be reconfigured. The CDU will display channel 21 when the FH mode of operation has been selected for the SINCGARS radio. This is provided as an indication that the SINCGARS cannot be placed in the FH mode from the CDU and the CDU will not accept a channel 21 data entry. The SINCGARS radio will take a nominal 5 seconds to tune to selected frequency after a 1.5 second switch stabilization period when using the cyclic grip radio select switch.

e. The SINCGARS radio can be configured for emergency operation via the CDU MAYDAY function which is accessed with the CDU dedicated SOS key. When activated, the SINCGARS radio is automatically tuned to the VHF-FM emergency frequency (40.500 MHz), squelch is enabled, and the SINCGARS KY-58 is set to clear mode. In addition, the MAYDAY annunciator is displayed on any flight symbology display and the CDU will update to indicate the emergency frequency is selected for SINCGARS. Upon deactivation of MAYDAY, the SINCGARS radio will return to its pre-emergency configuration with two exceptions. The radio will not automatically return to frequency hopping mode nor will it enter scan mode if previously configured.

f. The SINCGARS radio is also affected by the EMCON function. The EMCON function is selected via the CDU EMCON control page which is accessed by pressing the CDU TIM/EMC key. While on the EMCON control page, pressing CDU L1 key to display ALL STBY will inhibit all aircraft emitters and will trigger the EMCON ACTIVE annunciator for display on any flight symbology display. Pressing CDU R4 key to display COMM STBY will only inhibit the communications and radio navigation emitters. There is no other indication that EMCON is active for the communication systems other than on the CDU EMCON control page. For the communication systems, EMCON is a function of the audio junction box and when selected, the audio junction box prevents any transmit key activation from reaching the radio transmitters.

3-47. SINCGARS Modes of Operation.

There are two modes of operation for the SINCGARS radio, single channel and frequency hopping. When either mode is selected, there is a key legend stabilization delay before the mission processor commands the SINCGARS to the selected mode.

a. Single Channel Mode. In the single channel mode, the radio normally operates on one selected frequency. Other features of the single channel mode are: scan, priority channel scan, fine tune control, squelch control, and SINCGARS frequency/channel tuning. Eight single channel frequencies can be loaded into the R/T with the corresponding channels being numbered from 0 to 7. These eight single frequencies include a manual frequency. cue frequency, and six more pre-selected frequencies. SINCGARS R/T channel allocations are delineated as follows; channel 0 is the manual channel and is reserved for the manual frequency. Channel 1 is designated as the entrypad channel and is used by the IASS in tuning the SINCGARS radio. Channels 2 through 6 are the scan channels and are reserved for up to a maximum of five scan frequencies. Channel 7 is the cue channel which is monitored while the SINCGARS is in frequency hopping mode of operation. SINCGARS R/T channel numbers do not correlated with the SINCGARS frequency list channel numbers. In the list, channel 1 is reserved for the manual frequency and channel 2 for the cue frequency.

NOTE

When the pilot selects a channel on the MFD to be tuned which is not a manual, cue, or scan channel, the IASS commands the R/T to load the frequency into the entrypad channel. Upon completion, the IASS then commands the radio to tune to the entrypad channel.

(1) Scan. The scan feature for SINCGARS is dependent upon the scan channels that are elected from the SINCGARS frequency list. Access to the SINCGARS frequency list from a primary control page is accomplished by pressing MFD L5 (COMM) key which will display the VHF primary control page, then press MFD R5 (SINC GARS LIST) key. This control page can display a maximum of 20 preselected frequencies. A maximum of 7 channels can be selected for the scan function which includes the manual and cue channels. If the manual and cue channels are not selected, only 5 channels can be selected for the scan function. An ILLEGAL ACTION alert will be displayed if the pilot attempts to select more than the defined amount. When an attempt is made to activate the scan function, there must be a minimum of 2 channels selected for scanning or an ILLEGAL ACTION alert will be generated. To activate the scan function, press MFD R6 (SINC GARS CTRL) key to access the SINCGARS control page, then press MFD L3 (SCAN*) key to activate scan feature. A priority channel can be selected for use in conjunction with the scan function. The pilot can scan the selected channel after every scan of a non-priority frequency. A priority channel must be selected and is entered via CDU L2 (PRIORITY CHAN) key while on the SINCGARS control page. A zero in the CDU field indicates no priority channel is desired. If the pilot attempts to initiate the scan function without entering a value, an ILLEGAL ACTION alert will be generated.

(2) Squelch. This feature is normally enabled and allows the SINCGARS radio to have a 150 Hz tone preamble threshold to filter out the noise at

extreme range. If communication with a non-SINCGARS radio is attempted and the pilot cannot hear transmissions, it is recommended that squelch be disabled.

(3) Variable Power Amplifier. There are three output power levels that can be selected while on the VHF control page via MFD R3 (PWR) key. They are LOW, MED, and HI. When OFF is selected, the variable power adapter is disabled and the nominal 10-watt output of the SINCGARS radio is applied to the antenna for transmission. With LOW selected, the variable power adapter is enabled and attenuates the 10-watt radio output to provide a 2.5 watt power output to the antenna. With MED selected, the variable power adapter provides for 10-watt power output to the antenna. With HI selected, the variable power adapter amplifies the 10-watt radio output to 40 watts.

(4) Offsets. Fine tuning of the SINCGARS radio is done via MFD R4 (OFFSET) key. When selected it is maintained by the mission processors. Once a channel is tuned with an offset the pilot my select another channel. When retuning back to the original channel, the mission processor will remember the selected offset and tune the radio to the frequency. Offset is only available for single channel state, if selected and the radio is not in the single channel mode, an ILLEGAL ACTION alert will be generated. Once offsets are selected, the IASS allows for key stabilization before commanding the SINCGARS radio to the selected mode of operation.

b. Frequency Hopping Mode. The radios in a SINCGARS net simultaneously change frequencies up to 100 times per second in a pseudorandom fashion when transmitting and receiving; therefore, making jamming and direction finding ineffective. The following frequency hopping data is required by all radios in the net: hopsets, lockout sets (if mission requirements dictate), transmission security key (TSK), net identifier, and TOD. The hopset identifies the group of frequencies to be used by the net. Lockout sets define the frequencies within the group that will not be used by the net. The TSK determines the sequence of frequency hopping. The TSK is appended to the end of the hopset and cannot be modified or selected by the pilot. The net identifier determines where in the hopset the hopping sequence starts. The TOD synchronizes all the radios in the net. Hopsets are displayed as FH CHANs on the SINCGARS fill control page and on the associated CDU page. There are 7 FH CHANs available for selection. Channel zero is not a full frequency hopping channel (cold channel); however, it is used to receive the electronic remote fill which can consist of the hopset, lockout set, TSK, and TOD. For each frequency hopping, there is a corresponding identifier for that channel. The identifier will be displayed on the CDU line labeled FH ID. For channel zero, the FH ID will be cold if the hopset has been loaded. Channel zero hopset can only be loaded by the fill device via the fill connector. Channel zero must be loaded to receive the ERF to establish frequency hopping on channel 1 through 6. The ID data range for channels 1 through 6 is 000-999. The receiver/transmitter maintains the TOD and provides the synchronization for SINCGARS frequency hopping mode. To operate in a net, all of the radios must be synchronized in time to the master, which is referencing the receiver/transmitter internal clock. Modifying and reading the TOD and can be done via the CDU L3 (SET TOD) and MFD R3 (READ TOD) on the SINCGARS control page. If the pilot has a hopset, net entry, and lockout but the receivers/transmitters internal clock is less than or equal to 4 seconds off the master's net time, the net master only needs to key the radio which will send out a preamble to the net members which synchronizes all of the receivers/transmitters internal clocks to the net master. If the clocks time is greater than 4 seconds but less than 1 minute off the net master's time, the pilot can get back into the net via the late net entry function. Initial setup of an operating communications net using SINCGARS requires a net master. Only one net master can selected. If there are two net masters and their receiver/transmitter internal clocks are different, it will create a conflict for the net TOD. Selection of net master and member are: frequency hopping synchronization and ERF send, both can only be done in the MSTR mode. Only members can do late net entry. After all of the prerequisite criteria has been met, the pilot can enter frequency hopping mode in which the radio will retune to pseudorandom frequencies 100 times a second when transmitting and receiving. There are five functions to enter frequency hopping: cue operation, cold hop operation, hopset/lockout loading, purging, and late net entry.

NOTE

To cue a SINCGARS radio which is in the frequency hopping mode, the pilot must keep the radio keyed for at least 4 seconds while tuned to the cue frequency while in single channel mode. This is needed because of the time factor that the radio monitors the cue channel which is once every 4 seconds.

(1) Cue Operation. This mode allows an pilot to prompt another SINCGARS radio who is working in the frequency hopping mode to come out

of the frequency hopping mode and into single channel mode. When this is done, a 600-Hz tone is heard over the ICS system followed by a display of SINCGARS CUE on a HSD primary page. When the member or master comes out of the frequency hopping mode to the single channel mode, they must be tune to the cue channel which is channel 2 (internal receiver/transmitter channel 7) of the SINCGARS frequency list page . When the pilot is in the single channel and tunes channel 2, the pilot will be able to define what TSK is being used for the day, and if they match, the pilots will be able to enter the cold hop mode of frequency hopping.

NOTE

If TSK do not match or TSK are not loaded, cold hop operation will not be possible.

Due to the limited security of the cold channel of frequency hopping mode, it is recommended that only one hopset and lockout be sent in this mode.

(2) Cold Hop Operation. This is the initial entry point of frequency hopping operation. The pilot has to select an operating channel for the frequency hopping mode. This is done via the CDU L1 (FH OP CHAN-ID) key on the SINCGARS control page. Entering a zero in the field will command the radio to the desired operating channel (receiver/transmitter's manual channel). When the pilot selects the frequency hopping channel, the TSK modifies the cold hop operation to provide security while in the cold hop mode. Since the TSK modifies the cold channel, the TSK must match each other in order for the radio to process data and provide communication. If the pilot has no hopset loaded in frequency channel zero of the SINCGARS fill control page, the radio prompts frequency hopping channel one for its TSK. Once a TSK is accessed and matches the other radios TSK, there will be a reconfiguration of the radio for cold hop operation. Once the pattern has been established and the radio needs the TOD, it can be transmitted to the radio via the cold channel. This will allow the radio to hop pseudorandomly on the FH OP channel frequency and the receiver/transmitter internal clock will round robin in the 4 second time frame needed to maintain communication. Once the pilot has the TOD, the radios can send hopsets and/or lockouts via the ERF operation. When the single hopset and/or lockout has been sent, it must be determined where in the net the pilots will enter the frequency hopping mode. When this is established, the pilots can enter this with CDU R2 (NET ENTRY) KEY of the SINCGARS control page. Once the pilots are in the net, any additional hopsets and/or lockouts can be sent to the radio.

NOTE

To ERF send, the pilot must be a net master.

(3) Hopsets and Lockout Loading. To complete the equation for frequency hopping mode, hopsets and/or lockouts are needed for the completion of the frequency hopping table. These hopsets and lockouts can be loaded in two ways: local and remote. Local loading of the hopsets and lockouts can be accomplished via the appropriate fill device for the SINCGARS radio. This unit connects directly to the receiver/transmitter and loads all the required lockouts and/or hopsets. Access to the SINCGARS fill control page is needed for this operation from a primary control page. Remote loading is possible through a means called ERF. ERF is a means for hopsets and lockouts to be sent to a SINCGARS radio that has no information to enter the frequency hopping mode and communicate in a net. Access to the remote loading information is on the SINCGARS fill control page. To load remotely hopsets and lockouts, the pilot presses MFD L3 (FILL MODE) key to display FILL MODE REM. Next, the pilot must choose the variable to be loaded, the choices are lockout or hopset. CDU L3 (FH CHAN) and R4 (LOCKOUT) keys determine where in the fill control page the hopset and/or lockout is to be loaded. The pilot will press MFD L4 (LOAD) key to display LOAD*. While the radio is loading, if MFD L4 (LOAD) key is pressed, a SINCGARS RADIO BUSY alert will be displayed on the MFD.

NOTE

An ILLEGAL ACTION alert will be displayed if the pilot attempts to purge FH OP channel 0 or channel 1, if channel 0 is not loaded.

(4) Hopset and Lockout Purging. Each of the hopsets and lockouts can be purged from the

radio by the pilot. Using this mode will allow new hopsets and lockouts to be loaded into the memory of the radio. Access to the purge function is on the SINCGARS fill control page. Once this page is displayed, MFD L2 PRGE) key is used to remove the selected variable. The pilot must select which variable is going to be purged via the MFD L1 (VAR SEL) key. When either a lockout or hopset is selected, the pilot must enter the desired channel with CDU L3 (FH CHAN) or L4 (LOCKOUT CHAN) key to be purged. When this is completed, the pilot presses L2 (PRGE) key to display PRGE*. This will tell the radio to blank the FH-ID display.

NOTE

The maximum time that late net entry will pull the net member in is 0.5 second; therefore, repeated net late net entries might be required to reestablish communications.

(5) When the member does this the net master needs only to key the microphone to pull the members receiver/transmitter TOD into the 4-second window. When this is done, the MFD is updated by the asterisk disappearing from the screen. If communication is not reestablished, several attempts of late net entry might be required for communications to be established.

3-48. MFD and CDU SINCGARS Function and Control Pages.

The SINCGARS control consists of three MFD pages and their supporting CDU pages. The three MFD and CDU pages provide most of the controls required to select the operating requirements for the SINCGARS radio. Primary access to the SINCGARS control pages is provided by the HSD, VSD, or HVR primary page and the VHF radio control page. The CDU pages are automatically displayed when the MFD page appears.

a. SINCGARS Control Pages. The SINCGARS control pages allow setting of the operating mode, accessing SINCGARS fill page, and accessing other radio control pages (Figure 3-23).

KEY/LEGEND	FUNCTION
	MFD Page
L1 (OFF SET 10, 5, 0, -5, or -10)	Press to select the desired offset variable for SINCGARS operation (fine tuning capability). Selections available: 10, 5, 0, -5, or -10.
L3 (SCAN)	Press to select or deselect scan mode for the SINCGARS radio.
L5 (VHF COMM)	Press to access the VHF radio control page.
L6 (UHF COMM)	Press to access the UHF radio control page.
L7 (HF COMM)	Press to access the HF radio control page.
R1 (MODE SC or FH)	Press to select single channel mode (SC) or frequency hopping (FH) mode of the SINCGARS radio. Selections available: SC or FH.
R2 (NET MBR or MSTR)	Press to select net member (MBR) or master (MSTR) mode for frequency hopping operation. Selections available: MBR or MSTR. (MBR - Any SINCGARS radio in the frequency hopping net that is not performing as the master radio. MSTR - The SINCGARS radio in the frequency hopping net that is performing as the master sets the timing of all other radios in the net.
R5 (FILL CTRL)	Press to access the SINCGARS fill page.
R6 (SINC GARS LIST)	Press to access the SINCGARS frequency list page.
R7 (RTN)	Press to return to the primary HSD, VSD, or HVR page.
L2, L4, R3, and R4	Not used.

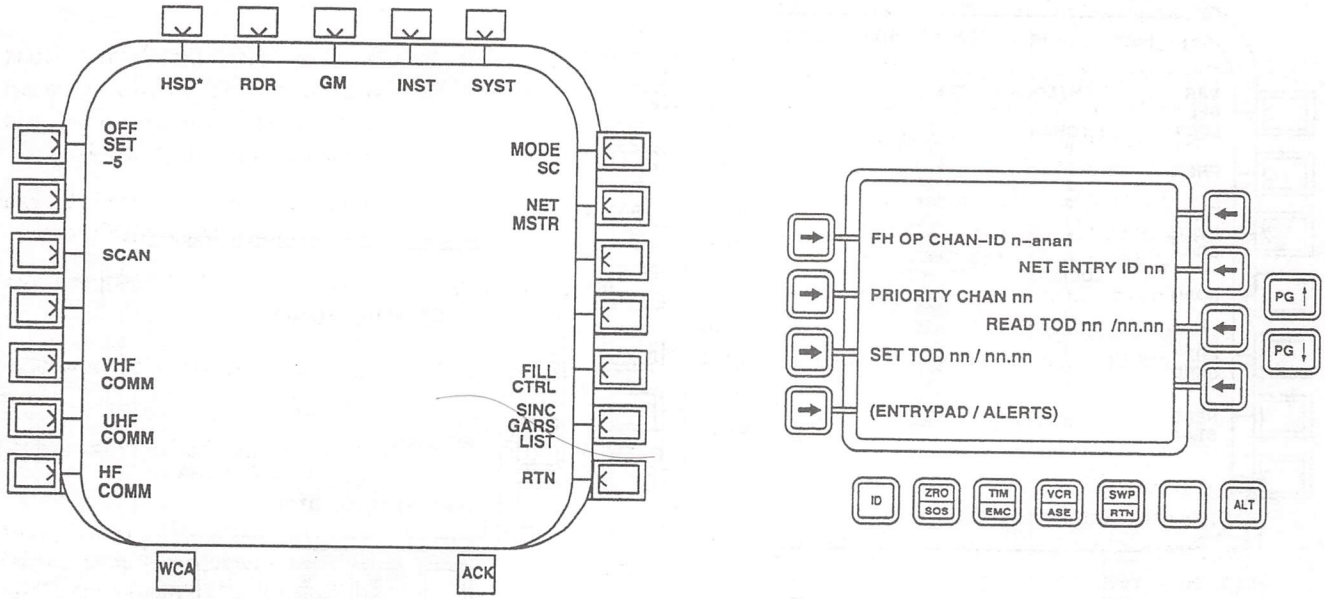

AK2508
SA

Figure 3-23. MFD and CDU SINCGARS Control Pages

KEY/LEGEND	FUNCTION
	CDU Page
L1 (FH OP CHAN-ID)	Press to enter the frequency hopping operational channel from the entrypad to be purged or retrieved. Entrypad data range: 0 to 7.
L2 (PRIORITY CHAN)	Press to enter the priority scan channel from the entrypad for SINCGARS operation. Entrypad data range: 0 to 20.
L3 (SET TOD)	Press to enter the day and time from the entrypad for transmission to another SINCGARS radio to be used in the frequency hopping mode. Entrypad data range: day - 0 to 99, time - 0.00 to 23.59.
R2 (NET ENTRY ID)	Press to enter the new ID value from the entrypad for used with the SINCGARS radio FH OP channel. Entrypad data range: 0 to 99.
R3 (READ TOD)	Press to request the current day and time from the SINCGARS radio. When available, the day and time information is displayed for 30 seconds. Data range: day - 0 to 99, time - 0.00 to 23.59.
L4 (Entrypad/Alerts)	Standard CDU default pages line key. Refer to paragraph 3-45, CDU Default Pages, for details on this key function if required.
R1 and R4	Not used

b. SINCGARS Fill Page. The SINCGARS fill page allows loading and establish operating parameters for the frequency hopping capability of the SINCGARS radio (Figure 3-24).

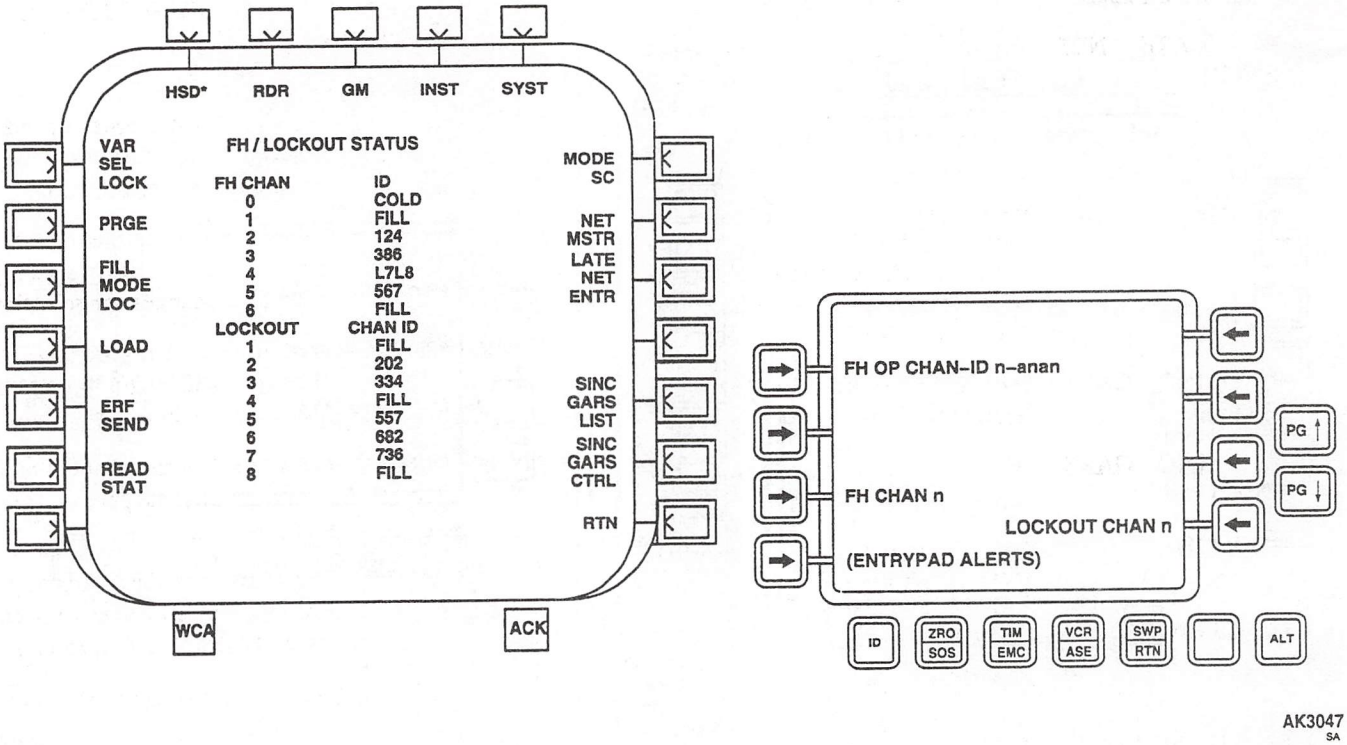

Figure 3-24. MFD and CDU SINCGARS Fill Page

KEY/LEGEND	FUNCTION
	MFD Page
L1 (VAR SEL LOCK or HOP)	Press to select the desired SINCGARS variable of hopset or lockout for LOAD, ERF SEND, PRGE, or READ STAT operation. Selections available: LOCK or HOP.
L2 (PRGE)	Press twice to clear the hopset and/or the lockset channel(s) displayed adjacent to CDU L3 (FH CHAN) and CDU R4 (LOCKOUT CHAN) keys.
L3 (FILL MODE LOC or REM)	Press to select the local or remote fill option for loading. Selections available: LOC or REM.
L4 (LOAD)	Press to load a SINCGARS hopset or lockout channel.
L5 (ERF SEND)	Press to send hopset or lockset channel data to another SINCGARS radio station.
L6 (READ STAT)	Press to read hopset or lockset status/ID information for the SINCGARS radio
R1 (MODE SC or FH)	Press to select single channel mode (SC) or frequency hopping (FH) mode of the SINCGARS radio. Selections available: SC or FH.
R2 (NET MBR or MSTR)	Press to select net member (MBR) or master (MSTR) mode for frequency hopping operation. Selections available: MBR or MSTR. (MBR - Any SINCGARS radio in the frequency hopping net that is not performing as the master radio. MSTR - The SINCGARS radio in the frequency hopping net that is performing as the master sets the timing of all other radios in the net.

KEY/LEGEND	FUNCTION
R3 (LATE NET ENTR)	Press to request late net entry into a net that is already operating. Late net entry is allowed when MFD R3 (LATE NET ENTR) key is pressed and your radio is on the desired frequency hopping net and TOD is within ±59 seconds. If net entry is not acheived, you must cue the net in which entry is desired and request a cold start.
R5 (SINC GARS LIST)	Press to access the SINCGARS frequency list page.
R6 (SINC GARS CTRL)	Press to access the SINCGARS control page.
R7 (RTN)	Press to return to the primary HSD, VSD, or HVR page.
L7 and R6	Not used.
	CDU Page
L1 (FH OP CHAN-ID)	Press to enter the frequency hopping operational channel from the entrypad and the corresponding ID will be displayed. Entrypad data range: 0 to 7.
L3 (FH CHAN)	Press to enter the frequency hopping channel for a purge, hopset loading, or ERF operation. Entrypad data range: 0 to 6.
R4 (LOCKOUT CHAN)	Press to enter the lockout channel for a purge or ERF operation. Entrypad data range: 1 to 8.
L4 (Entrypad/Alerts)	Standard CDU default pages line key. Refer to paragraph 3-45, CDU Default Pages, for details on this key function if required.
L2 and R1 thru R3	Not used.

c. SINCGARS Frequency List Pages. The SINCGARS frequency list pages allow selecting of a preset operating frequency, tuning of the radio to this frequency, adding or changing a preset frequency, loading the original DTM constructed communications plan, establishing clear/secure for the preset frequency, and accessing other radio control pages (Figure 3-25).

KEY/LEGEND	FUNCTION
	MFD Page
L1 (SEQ▲)	Press to move pointer up adjacent to desired preset location for additions, changes, or selection.
L2 (CHAN▼)	Press to move pointer down adjacent to desired preset location for additions, changes, or selection.
L3 (CLR/SEC)	Press to select between clear (CLR) or secure (SEC) for preset identified by the pointer.
L4 (SCAN CHAN)	Press to select the channel adjacent to the pointer as part of the scan mode.
L5 (VHF COMM)	Press to access the VHF frequency list which tunes and allows changing of VHF radio frequencies.
L6 (UHF COMM)	Press to access the UHF radio control page.
L7 (HF COMM)	Press to access the HF radio control page.
R1 (TUNE SINCGARS)	Press to select the channel/frequency adjacent to the pointer for use with the SINCGARS radio.
R4 (LOAD COMM)	Press twice to load or reload the DTM preconstructed communications plan.
R5 (FILL CTRL)	Press to access the SINCGARS fill page.
R6 (SINC GARS CTRL)	Press to access the SINCGARS control page.
R7 (RTN)	Press to return to the primary HSD, VSD, or HVR page.
R2 and R3	Not used.
	CDU Page 1
L1 (FREQ)	Press to enter the transmitter frequency from the entrypad for the SINCGARS frequency list. Entrypad data range: 30.000 to 87.975 MHz tunable in 0.025 MHz increments.

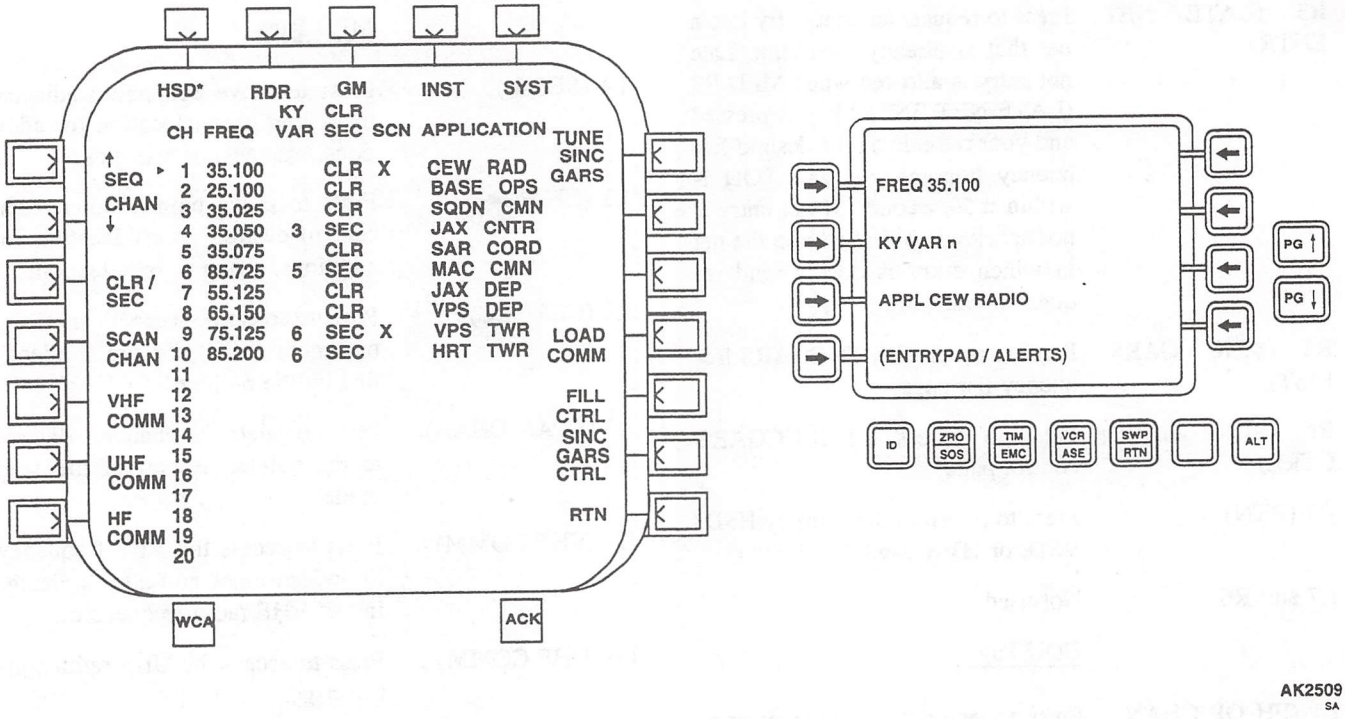

Figure 3-25. MFD and CDU SINCGARS Frequency List Pages

KEY/LEGEND	FUNCTION
L2 (KY VAR)	Press to enter the SINCGARS KY-58 variable from the entrypad for the SINCGARS frequency list. Entrypad data range: 1 to 6.
L3 (APPL)	Press to enter a name from the entrypad (up to eleven characters) to be assigned to a particular channel in the frequency list.
L4 (Entrypad/Alerts)	Standard CDU default pages line key. Refer to paragraph 3-45, CDU Default Pages, for more details.
R1 thru R4	Not used.

3-49. SINCGARS Normal Operation.

SINCGARS preset channels/frequencies and MFD controls may be accessed by the collective and cyclic controls. Refer to paragraph 3-13, Cyclic and Collective Grips MFD Controls, for more details if required. The following procedures describe the MFD and CDU keys for normal operation the SINCGARS radio:

1. CSC control panel RADIO MON 1 pushbutton - Push on, then adjust volume as desired.
2. CSC control panel mode selector - Set at position 1.
3. To load frequencies from DTM, perform the following:
   a. MFD T5 (SYST) key - Press to access system control page 1.
   b. MFD L7 (NEXT) key - Press to access system control page 2.
   c. MFD R4 (LOAD COMM) - Press.
   d. MFD T1 key - Press.
   e. MFD L5 (COMM) key - Press access VHF control page.
   f. MFD R5 (SINC GARS LIST) key - Press to access SINCGARS frequency list control page. Verify that the frequency list was loaded from the DTM.

4. To activate single channel operation, perform the following:

   a. MFD T1 key - Press to access HSD, VSD, or HVR primary page as desired.

   b. MFD L5 (COMM) key - Press to access VHF control page.

   c. MFD R6 (SINC GARS CTRL) key - Press to access SINCGARS control page.

   d. MFD R1 (MODE) key - Press to display MODE SC adjacent to R1 key.

   e. Enter desired channel or frequency into the entrypad, then press CDU L1 (SINC GARS) key.

5. To activate scan mode, perform the following:

NOTE

At least two channels must be selected before scan can be activated.

   a. MFD T1 key - Press to access HSD, VSD, or HVR primary page as desired.

   b. MFD L5 (COMM) key - Press to access VHF control page.

   c. MFD R5 (SINC GARS LIST) key - Press to access SINCGARS frequency list page.

   d. MFD L4 (SCAN CHAN) key - Press to select the channel/frequency adjacent to the pointer to be one of the scanned frequencies.

   e. MFD R6 (SINC GARS CTRL) key - Press to access SINCGARS control page.

NOTE

A priority channel value must be entered even if no channel is desired.

   f. Enter desired channel or zero (0) into the entrypad, then press CDU L2 (PRIORITY CHAN) key.

NOTE

When activity is detected on a scanned channel, the radio will lock on that channel and the SCAN LOCK advisory will be displayed.

   g. MFD L3 (SCAN) key - Press to activate scan mode (asterisk should appear adjacent to SCAN).

6. To fill a hopset and lockout locally, perform the following:

   a. MFD T1 key - Press to access HSD, VSD, or HVR primary page as desired.

   b. MFD L5 (COMM) key - Press to access VHF control page.

   c. MFD R6 (SINC GARS CTRL) key - Press to access SINCGARS control page.

   d. MFD R5 (FILL CTRL) key - Press to access fill control page.

   e. MFD L1 (VAR SEL) key - Press to select the variable to be loaded (HOP or LOCK).

   f. MFD L3 (FILL MODE) key - Press to select FILL MODE LOC.

   g. If hopset is to be loaded, enter frequency hopping channel into the entrypad, then press CDU L3 (FH CHAN) key.

   h. If lockout is to be loaded, enter frequency lockout into the entrypad, then press CDU L4 (LOCKOUT CHAN) key.

   i. SINCGARS fill device - Connect to the fill connector on the SINCGARS radio.

   j. SINCGARS fill device - Power on, then select hopset or lockout.

   k. MFD L4 (LOAD) key - Press to load hopset or lockout (asterisk should appear adjacent to LOAD).

NOTE

A beep will be heard, the asterisk will disappear, and the hopset or lockout ID will be displayed on the MFD. If the load function was not completed properly, a SINCGARS SEQUENCE ERROR alert will be displayed. Repeat steps f. through k.

7. To fill a hopset and lockout remotely, perform the following:

   a. MFD T1 key - Press to access HSD, VSD, or HVR primary page as desired.

   b. MFD L5 (COMM) key - Press to access VHF control page.

   c. MFD R6 (SINC GARS CTRL) key - Press to access SINCGARS control page.

   d. MFD R5 (FILL CTRL) key - Press to access fill control page.

   e. MFD L1 (VAR SEL) key - Press to select the variable to be loaded (HOP or LOCK).

   f. MFD L3 (FILL MODE) key - Press to select FILL MODE REM.

   g. If hopset is to be loaded, enter frequency hopping channel into the entrypad, then press CDU L3 (FH CHAN) key.

   h. If lockout is to be loaded, enter frequency lockout into the entrypad, then press CDU L4 (LOCKOUT CHAN) key.

NOTE

MFD L4 (LOAD) key must be pressed before the ERF SEND function is activated by the other station.

   i. MFD L4 (LOAD) key - Press to load hopset or lockout (asterisk should appear adjacent to LOAD).

NOTE

A beep will be heard and the hopset or lockout ID will be displayed on the MFD along with the HOLDING MEM ACTIVE alert at the bottom of the MFD. When the loading is complete, the asterisk adjacent to MFD L4 (LOAD) key is removed. If loading was not completed properly, a SINCGARS SEQUENCE ERROR alert will be displayed at the bottom of the MFD.

8. To purge a hopset and lockout, perform the following:

   a. MFD T1 key - Press to access HSD, VSD, or HVR primary page as desired.

   b. MFD L5 (COMM) key - Press to access VHF control page.

   c. MFD R6 (SINC GARS CTRL) key - Press to access SINCGARS control page.

   d. MFD R5 (FILL CTRL) key - Press to access fill control page.

   e. MFD L1 (VAR SEL) key - Press to select the variable to be purged (HOP or LOCK), enter the hopset or lockout channel to be purged into the entrypad, then press CDU L3 (FH CHAN) or CDU L4 (LOCKOUT CHAN) key.

   f. MFD L2 (PURGE) key - Press to purge hopset or lockout (asterisk should appear adjacent to PRGE).

NOTE

Verify that the ID for the selected hopset or lockout has been purged is blank. If purge was unsuccessful, a SINCGARS SEQUENCE ERROR alert will be displayed at the bottom of the MFD. Repeat steps e. through h.

9. To ERF send, perform the following:

   a. MFD T1 key - Press to access HSD, VSD, or HVR primary page as desired.

   b. MFD L5 (COMM) key - Press to access VHF control page.

   c. MFD R6 (SINC GARS CTRL) key - Press to access SINCGARS control page.

   d. If TOD is not loaded, enter the day and time into the entrypad, then press CDU L3 (SET TOD) key.

   e. MFD R5 (FILL CTRL) key - Press to access fill control page.

   f. MFD R1 (MODE) key - Press to select frequency hopping mode (MODE FH).

   g. MFD R2 (NET) key - Press to select net master (NET MSTR).

h. MFD L1 (VAR SEL) key - Press to select the variable to be sent (HOP or LOCK).

i. If hopset is being sent, enter the hopset into the entrypad, then press CDU L3 (FH CHAN) key.

j. If lockout is being sent, enter the lockout into the entrypad, then press CDU L4 (LOCKOUT CHAN) key.

k. MFD L5 (ERF SEND) key - Press to send the hopset or lockout (asterisk should appear adjacent to ERF SEND and a beep will be heard).

NOTE

If SINCGARS does not have a TOD, an alert of SINCGARS TOD REQUIRED will be displayed and the pilot should repeat step d. If the IAP does not receive a response from the SINCGARS radio, a SINCGARS SEQUENCE ERROR alert will be displayed on the MFD and the pilot should repeat step a. through k.

10. To activate SINCGARS READ STAT, perform the following:

a. MFD T1 key - Press to access HSD, VSD, or HVR primary page as desired.

b. MFD L5 (COMM) key - Press to access VHF control page.

c. MFD R6 (SINC GARS CTRL) key - Press to access SINCGARS control page.

d. MFD R5 (FILL CTRL) key - Press to access fill control page.

e. MFD L1 (VAR SEL) key - Press to select the variable to be read (HOP or LOCK).

f. MFD L2 (READ STAT) key - Press to display the hopset or lockout (asterisk should appear adjacent to READ STAT).

NOTE

Verify the selected variable ID column on the MFD is updated to reflect the current IDs (two beeps should be heard for each hopset or lockout set loaded).

11. To make a late net entry, perform the following:

a. MFD T1 key - Press to access HSD, VSD, or HVR primary page as desired.

b. MFD L5 (COMM) key - Press to access VHF control page.

c. MFD R6 (SINC GARS CTRL) key - Press to access SINCGARS control page.

d. MFD R5 (FILL CTRL) key - Press to access fill control page.

e. MFD R1 (MODE) key - Press to select frequency hopping mode (MODE FH).

f. MFD R2 (NET) key - Press to select net member (NET MBR).

g. MFD R3 (LATE NET ENTR) key - Press to activate late net entry (asterisk should appear adjacent to LATE NET ENTR).

12. To activate frequency hopping mode, perform the following:

a. MFD T1 key - Press to access HSD, VSD, or HVR primary page as desired.

b. MFD L5 (COMM) key - Press to access VHF control page.

c. MFD R6 (SINC GARS CTRL) key - Press to access SINCGARS control page.

d. MFD R5 (FILL CTRL) key - Press to access fill control page.

e. Enter the desired frequency hopping channel into the entrypad, then press CDU L1 (FH OP CHAN-ID) key.

f. MFD R1 (MODE) key - Press to select frequency hopping mode (MODE FH).

3-50. VHF Radio Set.

The VHF radio (AN/ARC-186) is a multi-channel VHF radio which provides transmission and reception of AM/FM voice and data (when used with the ATHS) signals. The

VHF-AM antenna (disc) is located under the cabin section and the VHF-FM antenna (whip) is located on the tail pylon. The two FM-homing antennas used with the VHF radio are on each side of the helicopter fuselage, just behind the cockpit doors. Frequencies can be preset on 20 memory channels. One preset guard frequency and an FM-homing capability are also available. The VHF radio has a tunable receiver/transmitter with 2,319 FM channels and 1,759 AM channels selectable in 25 KHz increments for transmission and reception. The VHF radio is capable of operations under battery power only if a frequency has been assigned to preset one. If no frequency is entered in channel one after zeroizing, the VHF will be programmed to 122.2 automatically. Power to operate the VHF radio is provided by the No.2 dc monitor bus and the dc essential bus through circuit breakers marked NO.2 VHF R/T, located on the cabin overhead and upper console circuit breaker panels respectively.

3-51. VHF Modes of Operation.

The VHF radio has three modes of operation: AM, FM, and emergency mode.

NOTE

During VHF KY-58 secure operations in the AM mode, the data transfer rate between the transmitting and receiving radio must be set at the same rate (16 or 8). Also, when operating in the DI mode, the data transfer rate must be set at 8.

a. AM Mode. This mode is established by tuning the VHF radio to a frequency between 108.000 and 151.975 MHz. Frequencies between 108.000 and 115.975 are receive only. The AM mode can be tuned in 0.025 MHz increments.

b. FM Mode. This mode is established by tuning the VHF radio to a frequency between 30.000 and 87.975 MHz. This mode can be tuned in 0.025 MHz increments.

c. VHF Emergency Mode. When the fixed function SOS key on either CDU is pressed twice or the GD/EMER (ON) key on the ZEROIZE/EMERGENCY control panel is pressed, the radio set will retune to the preset guard frequency (121.5 MHz AM mode) and the radios will default to the clear mode. During emergency mode a MAYDAY annunciator message is displayed on the MFD. Emergency is cleared by pressing the fixed function SOS key on either CDU twice or by pressing the ON key on the ZEROIZE/EMERGENCY control panel. After emergency mode has been cleared, the radio will return to the mode it was in before the emergency mode was engaged.

3-52. VHF MFD and CDU Control Pages.

There are two MFD and two CDU pages that provide most of the controls required to select the operating state for the VHF radio. Primary access to the VHF control pages is provided by the HSD, VSD, or HVR primary page. In addition, other radio control and frequency list pages also provide access to these pages. Those keys will be identified during the explanation of the respective page. The CDU pages are automatically displayed when the MFD page appears.

a. VHF Control Pages. The VHF control pages allow setting of the operating parameters for the VHF radio and accessing other radio control pages (Figure 3-26).

KEY/LEGEND	FUNCTION
	MFD Page
L1 (VHF CLR or SEC)	Press to select between clear (CLR) or secure (SEC) mode for the VHF radio.
L2 (SQL)	Press to select between squelch on (SQL*) or squelch off (SQL) mode for the VHF radio.
	NOTE
	The CDU EMCON control page does not inhibit VHF TONE emissions.
L3 (TONE)	Press to activate CW tone mode for the VHF radio (TONE*, asterisk will appear for approximately 2 seconds). (Tone should be heard in the headsets if radio is selected.)
L5 (VHF LIST)	Press to access the VHF frequency list which tunes and allows changing to the VHF radio frequencies.
L6 (UHF COMM)	Press to access the UHF radio control page.
L7 (HF COMM)	Press to access the HF radio control page.
R1 (SINC GARS CLR or SEC)	Press to select between clear (CLR) or secure (SEC) mode for the SINCGARS radio.
R2 (SQL)	Press to select squelch on (SQL*) or squelch off (SQL) mode for the SINCGARS radio.

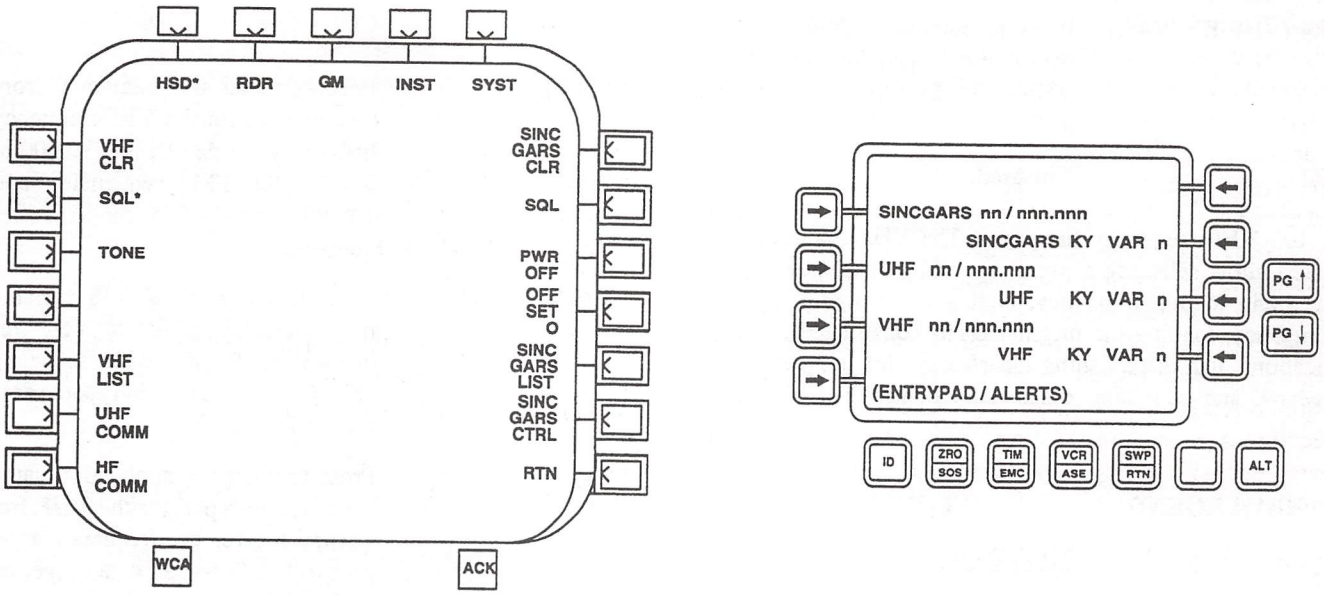

AK2492
SA

Figure 3-26. VHF Control Pages

KEY/LEGEND	FUNCTION
R3 (PWR HI, LO, MED, or OFF)	Press to select between the power state of the power amplifier for the SINCGARS radio. (LO - 3.5 to 7 watts, MED - 12 to 19 watts, and HI - 40 to 56 watts.)
R4 (OFF SET 10, 5, 0, -5, or -10)	Press to select the desired offset variable for SINCGARS operation (fine tuning capability). Selections available: 10, 5, 0, -5, or -10 KHz.
R5 (SINC GARS LIST)	Press to access the SINCGARS frequency list page.
R6 (SINC GARS CTRL)	Press to access the SINCGARS radio control page.
R7 (RTN)	Press to return to the HSD, VSD, or HVR primary page.
L4	Not used.

KEY/LEGEND	FUNCTION
	CDU Page
L1, L2, L3, and L4	Standard CDU default pages line key entries. Refer to paragraph 3-45, CDU Default Pages, for details on these key functions if required.
R2 (SINC GARS KY VAR)	Press to enter the KY-58 variable from the entrypad for use with the SINCGARS radio. Entrypad data range: 1 to 6.
R3 (UHF KY VAR)	Press to enter the KY-58 variable from the entrypad for use with the UHF radio. Entrypad data range: 1 to 6.

KEY/LEGEND	FUNCTION
R4 (VHF KY VAR)	Press to enter the KY-58 variable from the entrypad for use with the VHF radio. Entrypad data range: 1 to 6.
R1	Not used.

b. VHF frequency list pages. The VHF frequency list pages allow selecting a preset operating frequency, tuning the radio to this frequency, adding or changing a preset frequency, loading the original DTM constructed communications plan, establishing clear/secure for the preset frequency, and accessing other radio control pages (Figure 3-27).

KEY/LEGEND	FUNCTION
	MFD Page
L1 (SEQ▲)	Press to move pointer up adjacent to desired preset location for additions, changes, or selection.
L2 (CHAN▼)	Press to move pointer down adjacent to desired preset location for additions, changes, or selection.
L3 (CLR/SEC)	Press to select between clear (CLR) or secure (SEC) for preset identified by the pointer.
L5 (VHF COMM)	Press to access the VHF frequency list which tunes and allows changing of VHF radio frequencies.
L6 (UHF COMM)	Press to access the UHF radio control page.
L7 (HF COMM)	Press to access the HF radio control page.
R1 (TUNE VHF)	Press to select the channel/frequency adjacent to the pointer for use with the radio.
R4 (LOAD COMM)	Press to load or reload the DTM preconstructed communications plan (LOAD COMM*, asterisk will appear during loading).
R6 (CIPH CTRL)	Press to access the cipher control page.
R7 (RTN)	Press to return to the HSD, VSD, or HVR primary page.
L4, R2, R3, and R5	Not used.

KEY/LEGEND	FUNCTION
	CDU Page
L1 (FREQ)	Press to enter the frequency from the entrypad for the VHF frequency list. Entrypad data range: 30.000 to 87.975 for FM frequencies and 108.000 to 151.975 for AM frequencies.
L2 (KY VAR)	Press to enter the KY-58 variable from the entrypad for the VHF frequency list for use with frequency adjacent to L1. Entrypad data range: 1 to 6.
L3 (APPL)	Press to enter the application name from the entrypad for the VHF frequency list for the frequency adjacent to L1. Entrypad data range: up to 11 alphanumeric characters can be entered.
L4 (Entrypad/Alerts)	Standard CDU default pages line key. Refer to paragraph 3-45, CDU Default Pages, for more details.
R1 thru R4	Not used.

3-53. VHF Normal Operation.

Preset channels, frequencies, and MFD controls may be accessed by the collective and cyclic controls. Refer to paragraph 3-13, Cyclic and Collective Grips MFD Controls, for more details if required. The following procedures describe the MFD and CDU keys used for normal operation the VHF radio:

1. Press T1 (HSD, VSD, HVR) key to display either of these primary pages.
2. Press L4 (COMM) key to display the VHF control page. On the VHF control page, establish the VHF radio operating parameters per mission requirements.
3. For a quick or new channel/frequency tuning, enter channel/frequency on the CDU page for the VHF radio.
4. Press L5 (VHF LIST) key to display the VHF frequency list page.
5. To select a channel/frequency, sequence pointer adjacent to the desired channel/frequency.

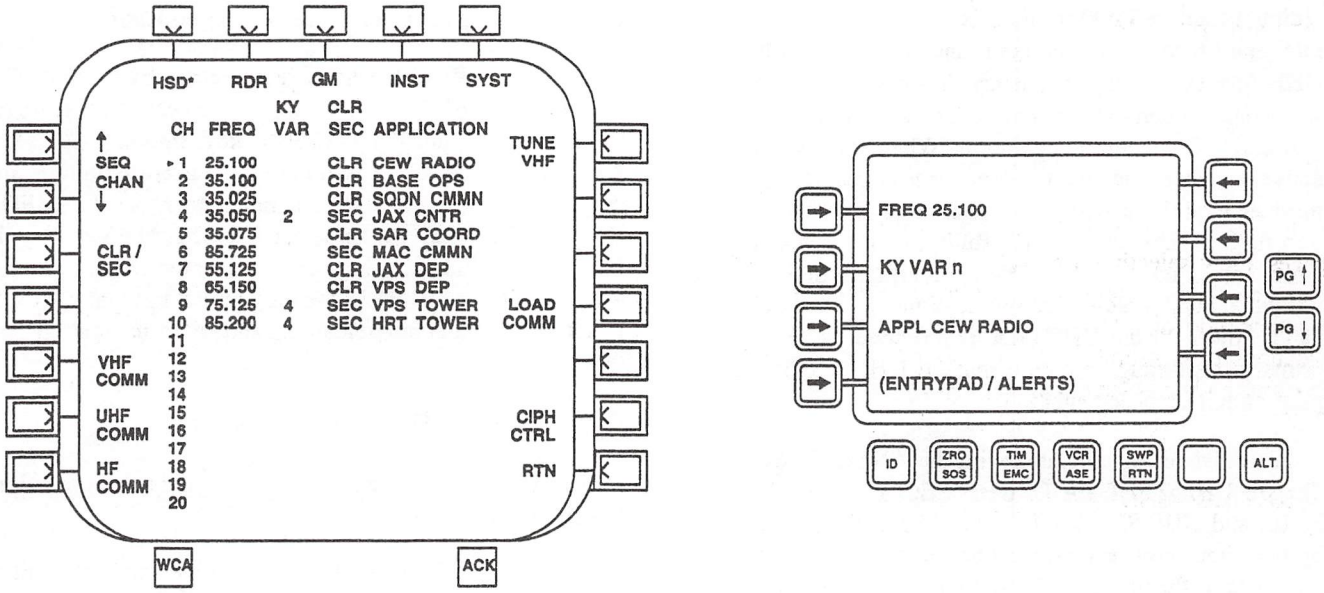

AK0096
SA

Figure 3-27. VHF Frequency List Pages

6. To add or change frequencies on the VHF frequency list page, perform the following:

   a. Sequence pointer adjacent to an empty channel or a channel which requires modification.

   b. Enter new or changed data via the CDU page.

NOTE

During VHF KY-58 secure operations in the AM mode, the data transfer rate between the transmitting and receiving radio must be set at the same rate (16 or 8). Also, when Operating in the DI mode, the data transfer rate must be set at 8.

   c. Using the MFD L3 (CLR/SEC) key, assign CLR or SEC for new/changed frequency as required.

   d. Repeats steps a. through d. for additional frequencies.

7. Select the desired radio channel/frequency for tuning by pressing R1 (TUNE VHF) key.

CAUTION

This radio set is designed for a 5 minute receive/1 minute transmit duty cycle.

NOTE

The frequency, stored as preset 1, will also be stored in the AN/ARC-186 itself and can serve as a default frequency. In the event that no valid frequency is stored as preset 1, the last tuned frequency will be stored as the VHF radio default. If no frequency is entered in channel one after zeroizing, the VHF will be programmed to 122.8 automatically.

8. The CSC panel switches must be set to the appropriate positions before the VHF radio can be used for transmitting/receiving.

3-54. UHF-AM Radio.

The UHF-AM HAVE QUICK (HQ) radio AN/ARC-164(V) is an airborne command and control radio set located in the tail pylon. If provides two way line-of-sight air

to air, air to ground AM communications in the UHF band from 225.000 to 399.975 MHz in 25 KHz increments, providing a total of 7,000 frequencies. It also contains a separate guard receiver that is fixed tuned to 243.000 MHz, the UHF-AM emergency frequency. The radio is capable of voice data communications in both clear and secure, in normal and HQ modes of operation. When the HQ mode is active, an electronic counter-countermeasures (ECCM) synthesizer module provides jam resistance and makes direction finding difficult. This capability, coupled with the security supplied by its KY-58 interface, provides for virtually invulnerable communications in the UHF-AM band. Power for the UHF radio is provided by the No.1 dc primary bus through a circuit marked UHF R/T on the copilot circuit breaker panel.

a. Advisories associated with the AN/ARC-164(V) radio are UHF TEST FAIL, UHF SEC TEST FAIL, UHF FAIL, and UHF SEC FAIL. When IBIT has been initiated by the pilot, the MP monitors the radio for proper self test sequence. If the unit fails the self test, the UHF TEST FAIL advisory is displayed on the MFD. The UHF FAIL advisory is displayed when the UHF radio fails while in its normal operating state. The MP also monitors for proper operation of the UHF KY-58 interface circuitry in the RTU. If the RTU interface circuitry fails, then the UHF SEC TEST FAIL advisory is displayed on the MFD. The UHF SEC FAIL advisory is displayed when the UHF KY-58 interface circuitry in the RTU fails during normal operation. If the KY-58 is not installed, the status code NC (not configured) and the letter O (off) are displayed adjacent to the UHF SEC legend on the equipment status and equipment status summary pages respectively.

b. Operator information alerts associated with the AN/ARC-164(V) radio are RADIO BUSY, ILLEGAL ACTION, and FUNCTION INOPERATIVE. The RADIO BUSY alert is displayed if a UHF function key is selected when the IAP is processing another function of the UHF radio. An ILLEGAL ACTION is displayed if the pilot attempts to perform a function that is not valid for the current state of the UHF radio. If the UHF radio or the UHF KY-58 is not usable and a function key is pressed that results in data output to those units, a FUNCTION INOPERATIVE alert will be displayed.

c. A total of twenty preset channels can be stored in the MP for UHF operation. These preset channels are maintained in the UHF frequency list. The UHF frequency contains the channel number with its corresponding frequency, KY variable, clear/secure mode, and application. This list can be entered manually through the MFD/CDU or loaded via the DTM utilizing the LOAD COMM function key. Preset channels are stored in nonvolatile memory in the MP; therefore, are not affected by power interruptions. Selecting channel 21 via the CDU places the UHF radio in the HQ active mode of operation. Channels can be selected utilizing the radio select switch on the collective.

d. The UHF-AM radio is also affected by the EMCON function. The EMCON CDU page is accessed by pressing the CDU fixed function TIM/EMC key. Pressing CDU key L1 to select ALL STBY will inhibit all aircraft emitters and displays EMCON ACTIVE annunciators on the MFDs. Pressing CDU key R4 to select COMM STBY will only inhibit the communications and radio navigation systems' emitters. COMM STBY is the only indication that EMCON is active for the communications and radio navigation systems.

3-55. UHF Modes of Operation.

The UHF-AM HQ radio has four modes of operation: MAIN, BOTH, GUARD, and HQ.

a. MAIN - Enables the main receiver and transmitter for normal operation; guard receiver disabled.

b. BOTH - Enables the main receiver and transmitter for normal operation; guard receiver enabled for monitoring.

c. GUARD - Automatically tunes the main receiver and transmitter to the guard frequency (243.000 MHz) and disables the guard receiver.

d. Frequency Hopping Capability. The UHF radio is modified with an electronic counter-counter measures (ECCM) module that makes jamming and direction finding by the enemy difficult.

e. The function of the MFD L3 (UHF TONE) key is dependent upon the radio internal clock state and the HQ tone mode (MFD R2 HQ T key) status. The functionality of the UHF TONE key is described below:

(1) If the UHF radio internal clock has not been initialized and the HQ tone mode is inactive, the radio will generate a 1020 Hz tone for 1.5 seconds when the TONE key is pressed.

(2) If the internal clock has not been initialized and the HQ tone mode is active, the radio will perform an emergency time of day (TOD) startup when the TONE key is pressed. This will initialize and start the internal clock from 00.00.00 which provides the radio with a TOD.

(3) If the internal clock has been initialized and the HQ tone mode is inactive, the radio will generate a TOD followed by the 1020 Hz tone when

the TONE key is pressed. The total duration of the two transmitted signals will be 1.5 seconds.

3-56. UHF MFD and CDU Control Pages.

There are two MFD and two CDU pages that provide most of the controls required to select the operating parameters for the UHF radio. Primary access to the UHF control pages is provide by the HSD, VSD, or HVR primary page and then via the MFD VHF control page. In addition, other radio control and frequency list pages provide access to these pages. Those keys will be identified during the explanation of the respective page. The CDU page is automatically displayed when the MFD page appears.

a. UHF Control Pages. The UHF control pages allow setting the operating parameters of the UHF radio and accessing other radio control pages (Figure 3-28).

KEY/LEGEND	FUNCTION
	MFD Page
L1 (CLR or SEC)	Press to select between clear (CLR) or secure (SEC) mode of the associated KY-58.
L2 (SQL)	Press to select between squelch on (SQL*) or squelch off (SQL) mode for the UHF radio.
	NOTE
	The CDU EMCON control page does not inhibit UHF TONE emissions.
L3 (TONE)	Enables HQ TOD generation and/or a 1020 Hz tone depending on the radio mode.
L4 (UHF MAIN, BOTH, or GUARD)	Press to select between MAIN, BOTH, or GUARD for the operating mode of the UHF radio.
L5 (VHF COMM)	Press to access the VHF radio control page.
L6 (UHF LIST)	Press to access the UHF frequency list.
L7 (HF COMM)	Press to access the HF radio control page.
R1 (HQ A)	Press to activate the selected HQ mode for operation (HQ A*, asterisk will appear when active).
R2 (HQ T)	Press to receive the HQ TOD (HQ T*). (For an emergency startup, L3 (TONE) key must be pressed within 5 seconds after activating HQ T* to establish TOD.)
R7 (RTN)	Press to return to the HSD, VSD, or HVR primary page.
R3 thru R6	Not used.
	CDU Page
L1, L2, L3, and L4	Standard CDU default pages line key entries. Refer to paragraph 3-45, CDU Default Pages, for details on these key functions if required.
R2 (SINC GARS KY VAR)	Press to enter the KY-58 variable from the entrypad for use with the SINCGARS radio. Entrypad data range: 1 to 6.
R3 (UHF KY VAR)	Press to enter the KY-58 variable from the entrypad for use with the UHF radio. Entrypad data range: 1 to 6.
R4 (VHF KY VAR)	Press to enter the KY-58 variable from the entrypad for use with the VHF radio. Entrypad data range: 1 to 6.
R1	Not used.

b. UHF frequency list pages. The UHF frequency list pages allow selecting a preset operating frequency, tuning the radio to this frequency, adding or changing a preset frequency, loading the original DTM constructed communications plan, establishing clear/secure for the preset frequency, and accessing other radio control pages (Figure 3-29).

KEY/LEGEND	FUNCTION
	MFD Page
L1 thru L7	Refer to VHF Frequency List Pages, for details on these key functions if required.
R1 (TUNE UHF)	Press to select the channel/ frequency adjacent to the pointer for the UHF radio.

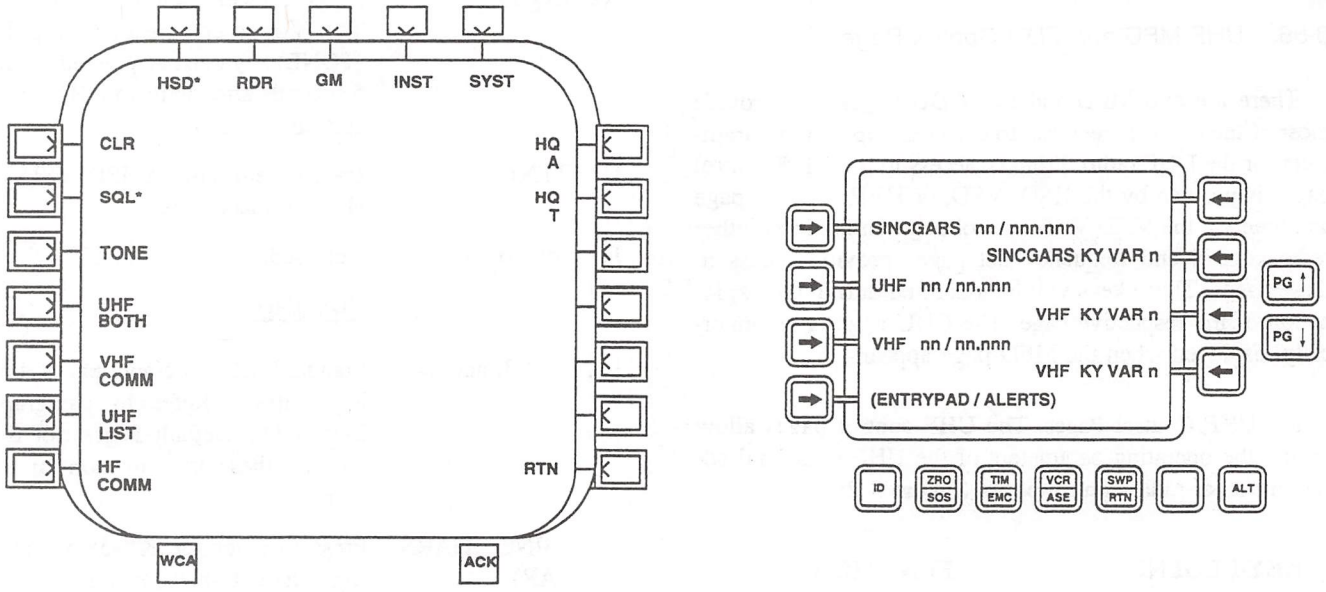

AK2491
SA

Figure 3-28. UHF Control Pages

KEY/LEGEND	FUNCTION
R4, R6, and R7	Refer to VHF Frequency List Page, for details on these key functions if required.
L4, R2, R3, R5, and R6	Not used.
	CDU Page
L1 thru L4 and R1 thru R4	Refer to VHF Frequency List Pages, for details on these key functions if required.

3-57. UHF Normal Operations.

Preset channels, frequencies, and MFD controls may be accessed by the collective and cyclic controls. Refer to paragraph 3-13, Cyclic and Collective Grips MFD Controls, for more details if required. The following procedures describe the MFD and CDU keys used for normal operation the UHF radio:

1. Press T1 (HSD, VSD, or HVR) key to display either of these primary pages.
2. Press L4 (COMM) key to display the VHF control page.
3. Press L6 (UHF COMM) key to display the UHF control page; establish the UHF radio operating parameters per mission requirements.
4. For a quick or new channel/frequency tuning, enter channel/frequency on the CDU page for the UHF radio.
5. Press L6 (UHF LIST) key to display the UHF frequency list page.
6. To select a channel/frequency, sequence pointer adjacent to the desired channel/frequency.
7. To add or change frequencies on the UHF LIST page, perform the following:
   a. Sequence pointer adjacent to an empty channel or a channel which requires modification.
   b. Enter new or changed data via the CDU page.

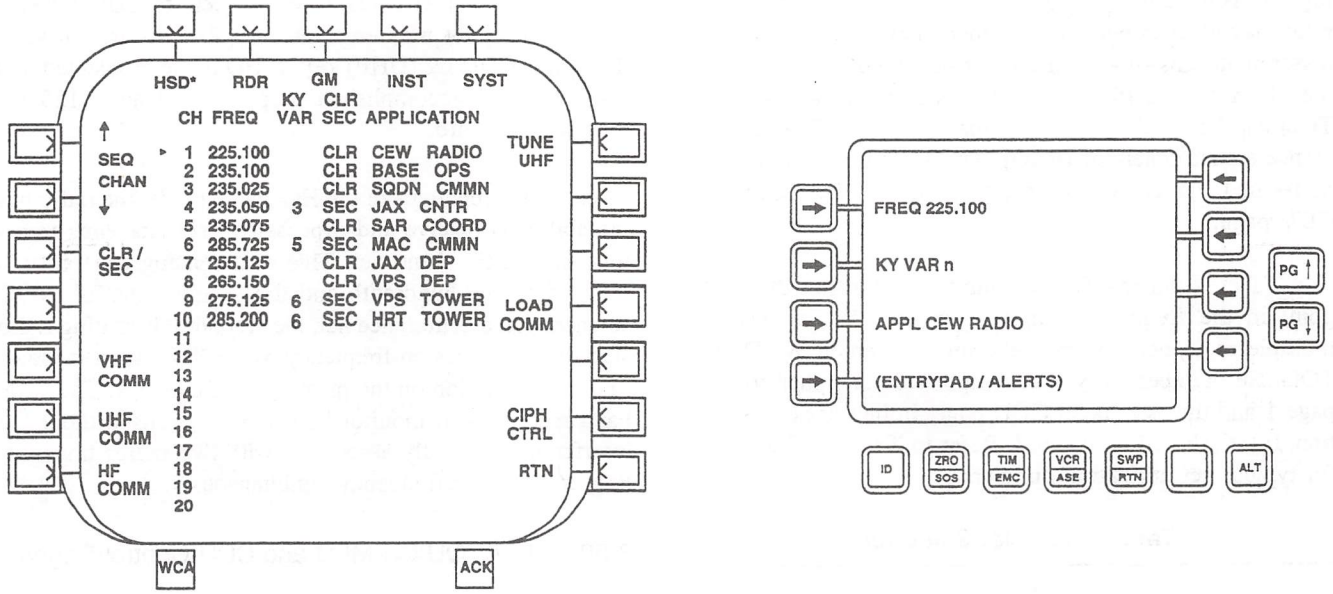

AK0083
SA

Figure 3-29. UHF Frequency List Pages

c. Using the MFD L3 (CLR/SEC) key, assign CLR or SEC for new/changed frequency as required.

d. Repeats steps a. through c. for additional frequencies.

8. Select the desired radio channel/frequency for tuning by pressing R1 (TUNE UHF) key.

9. The CSC panel switches must be set to the appropriate position for the UHF radio to enable transmissions and/or receptions.

3-58. UHF Radio HAVE QUICK Operation.

HQ makes jamming and direction finding difficult by changing the frequency used to receive or transmit, in a pseudorandom fashion (frequency hopping). Frequency hopping is performed by a code generator internal to the ECCM module. The frequencies on which the radio will hop are stored in a random but identical pattern in each radio. The key that initializes the code generator and establishes the frequency hopping pattern is provided by the Word Of Day (WOD). The WOD must be identical for all radios in the net to communicate. Synchronizing all of the radios in the net will allow tuning (transmit or receive) to the same frequency, at the same time, and for the same duration. Frequency hopping will continue as long as synchronization is maintained. Before selecting the HQ active (HQ A*) mode, the radio must first be initialized; consisting of the WOD, TOD, and net number.

a. Word of Day - The WOD is a code that establishes the frequency hopping pattern. The WOD can consist of up to 36 elements broken into 6 segments of six digits each. In HQ1 operation, a minimum of 2 and a maximum of 6 segments make up a WOD. HQ2 operations are performed by utilizing multiple word of day (MWOD). MWODs consist of a minimum of 3 and maximum of 7 segments, one of which provides a date group. HQ2 can hold up to six MWODs in non-volatile memory. The date group provides the radio the ability to change to the next day's MWOD at midnight without interrupting HQ operations. MWODs and WODs can be loaded via the DTM or the UHF cipher control page and associated CDU page. When the radio is turned off or power is lost after entering MWODs and WODs, the data will remain intact until manually changed or erased. If an MWOD of a duplicate date is entered, the new entry takes precedence. The operational date is part of the HQ2 TOD message. If HQ2 TOD message is unavailable, the pilot must manually enter the operational date so the radio can select the appropriate MWOD. If power is lost, the operational date is lost and must be reentered.

b. Time of Day - The TOD must be established to initialize/synchronize the radio's internal clock. Establishing the TOD can be accomplished in three ways: (1) the pilot may elect to perform an emergency TOD startup and disseminate this time to the other net radios; (2) the TOD may be received from the net master radio; and (3) the TOD can be received from a time signal set (TSS) or reference signal generator (RSG). The TOD functions can be performed via cipher control page 1 and the associated CDU page.

c. Net Number - The net number establishes the entry point in the frequency hopping pattern. This allows for multiple radio nets to operate using a common WOD and TOD. Net number entry is accomplished via cipher control page 1 and the associated CDU page. In lieu of net utilization, 00.00 should be entered. Refer to Tables 3-7 and 3-8 for typical net utilization numbers.

Table 3-7. Net Selection

	TACTICAL
00	Basic HQ
25	HQ2 NATO Hopset
50	HQ2 Non-NATO Hopset
75	Not used, Interrupted fault tone
	TRAINING
00	BASIC HQ training
25	HQ2 training
50/75	Not used, Interrupted fault tone
	NOTE
	Any selection of a net number outside the range indicated for each type of net will result in the invalid net number warning tone (3125 Hz tone interrupted at a 4 Hz rate).

Table 3-8. Net Type, Quantity, and Range

TYPES OF NETS	QUANTITY	RANGE OF NETS
Basic HQ training	5	00.000 - 00.400
Basic HQ tactical	1000	00.000 - 99.900
HQ2 training	16	00.025 - 01.525
HQ2 tactical	1000	00.0XX - 99.9XX

d. The pilot may activate the HQ mode in two ways. First, on the UHF page or cipher control page 1, press MFD R1 (HQ A) key or press MFD R3 (HQ A) key until an asterisk appears adjacent to the respective key (HQ A*). In addition, channel 21 is displayed adjacent to CDU L2 key. Second, the pilot may enter channel 21 into the entrypad then press CDU L2 (UHF) key. If HQ mode is selected and setup was not accomplished properly, a steady 3125 Hz tone will be heard.

e. Conferencing - In the HQ active mode, the radio has the ability to receive and process two simultaneous transmissions on the same net. This conferencing capability is selected by the hundredth and thousandth digits of WOD segments. In a conference net, the second transmitting radio shifts its transmission frequency by 25 KHz when it monitors a transmission on the primary net frequency. The wide band receiver will monitor both transmissions without the interference normally associated with two radios transmitting on the same frequency simultaneously.

3-59. HAVE QUICK MFD and CDU Control Pages.

The MFD and CDU cipher control page 1 provides the primary controls required to establish the HQ operating mode for the UHF radio (Figure 3-30). Primary access to the cipher control pages is provided through the HSD, VSD, or HVR primary page, MFD VHF control page, MFD UHF control page, then via the UHF frequency list page. In addition, the VHF frequency list page provides access to these pages. The CDU page is automatically displayed when the MFD page appears. These pages allow establishing the operating parameters for the HQ mode of the UHF radio, entering TOD and WOD codes, and accessing the VHF and UHF frequency lists.

KEY/LEGEND	FUNCTION
	MFD Page
L1 (PROG HQ1)	Press to load HQ1 WODs entered via the CDU for use during HQ1 operations (PROG HQ1*, asterisk will appear during loading).
L1 (PROG HQ2)	Press to load HQ2 WODs entered via the CDU for use during HQ2 operations (PROG HQ2*, asterisk will appear during loading).
L3 (VER HQ2 DATE)	Press to verify the WODs have been load for the date entered in the CDU for L3 (HQ2 DATE) key (VER HQ2 DATE*, asterisk will appear during verification).

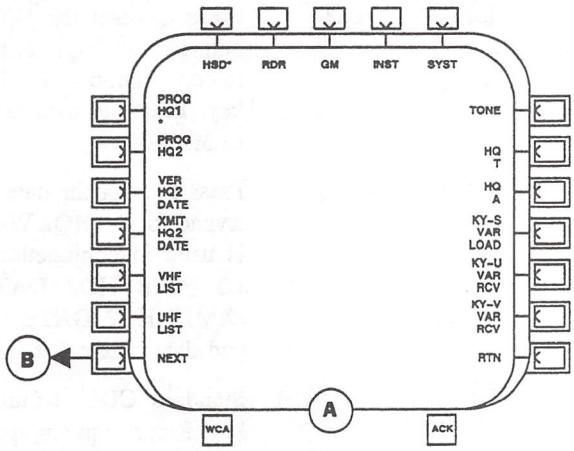

MFD CIPHER CONTROL (PAGE 1)

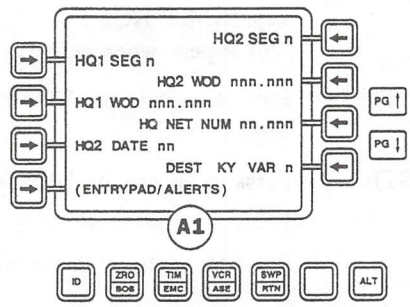

CIPHER CONTROL CDU PAGE

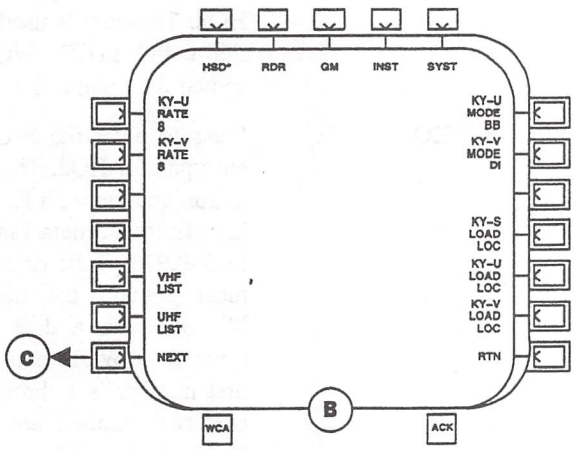

MFD CIPHER CONTROL (PAGE 2)

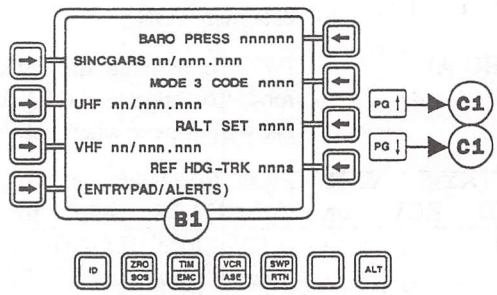

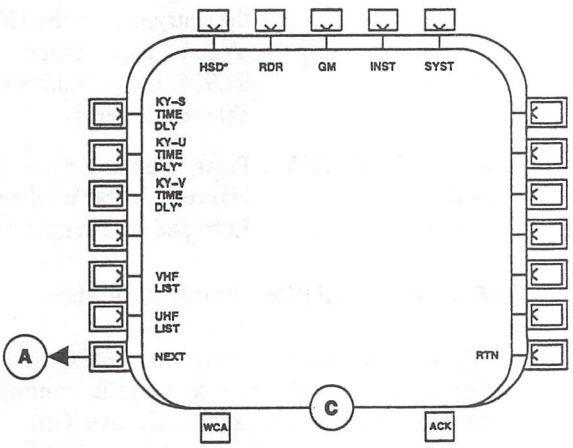

MFD CIPHER CONTROL (PAGE 3)

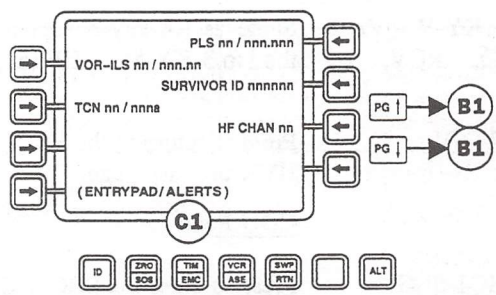

CDU DEFAULT PAGES

AK0217
SA

Figure 3-30. Cipher Control Pages

KEY/LEGEND	FUNCTION
L4 (XMIT HQ2 DATE)	Press to activate the HQ2 mode using the WODs for the date entered in the CDU for L3 (HQ2 DATE) key (XMIT HQ2 DATE*, asterisk will appear when active).
L5 (VHF LIST)	Press to access the VHF frequency list.
L6 (UHF LIST)	Press to access the UHF frequency list.
L7 (NEXT)	Press to access cipher control page 2.
R1 (TONE)	Enables HQ TOD generation and/or a 1020 Hz tone depending on the radio mode.
R2 (HQ T)	Press to receive the HQ TOD (HQ T*). (For an emergency startup, L3 (TONE) key must be pressed within 5 seconds after activating HQ T* to establish TOD.)
R3 (HQ A)	Press to activate the selected HQ mode for operation (HQ A*, asterisk will appear when active).
R4 (KY-S VAR LOAD, RCV, or OFF)	Press to select the No.1 KY-58 (SINCGARS radio) for remote (RCV), local (LOAD) loading, or normal operations (OFF). RCV - Allows variables to be loaded from a master transmitter. LOAD - Allows variables to be loaded from the No.1 KY-58 control panel.
R5 (KY-U VAR LOAD, RCV, or OFF)	Same as R4 key except used with the No.2 KY-58 (UHF radio).
R6 (KY-V VAR LOAD, RCV, or OFF)	Same as R4 key except used with the No.3 KY-58 (VHF radio).
R7 (RTN)	Press to return to the HSD, VSD, or HVR primary page.
	CDU Page
L1 (HQ1 SEG)	Press to enter the SEG WOD number from the entrypad for HQ1. This key is used in conjunction with L2 (HQ1 WOD) key. Entrypad data range: 1 to 6.
L2 (HQ1 WOD)	Press to enter the WOD from the entrypad for HQ1. This key is used in conjunction with L1 (HQ1 SEG) key. Entrypad data range: 200.000 to 399.975.
L3 (HQ2 DATE)	Press to enter the date from the entrypad for the HQ2 WOD. This key is used in conjunction with MFD L3 (VER HQ2 DATE) and L4 (XMIT HQ2 DATE) keys. Entrypad data range: 1 to 31.
L4 (Entrypad/Alerts)	Standard CDU default pages line key. Refer to paragraph 3-45, CDU Default Pages, for more details.
R1 (HQ2 SEG)	Press to enter the SEG WOD number from the entrypad for use with HQ2. This key is used in conjunction with R2 (HQ1 WOD) key. Entrypad data range: 1 to 7.
R2 (HQ2 WOD)	Press to enter the WOD from the entrypad for HQ2. This key is used in conjunction with R1 (HQ2 SEG) key. Entrypad data range: 200.000 to 399.975. (Last or seventh entry must contain the date code. A MWOD with a date code is the same as a WOD entry except the first number is a three (3) and the next two numbers are the date (01 to 31), followed by a decimal and three zeros.)
R3 (HQ NET NUM)	Press to enter the net number from the entrypad for the HQ mode. Entrypad data range: 00.000 to 99.975, if a net number is not available, enter zeros.
R4 (DEST KY VAR)	Press to enter the variable from the entrypad to be used with the HQ. Entrypad data range: 1 to 6.

3-60. HAVE QUICK Normal Operation.

Preset channels, frequencies, and MFD controls may be accessed by the collective and cyclic controls. Refer to paragraph 3-13, Cyclic and Collective Grips MFD Controls, for more details if required. If the UHF radio and HQ codes were entered via the DTM and the radio is on, entering channel 21 for the UHF radio via the CDU default

pages will active the HQ capability. The following procedures describe the MFD and CDU keys used for normal operation the UHF radio in the HQ mode:

1. Establish normal UHF radio communication per paragraph 3-57, UHF Normal Operation.

2. From the UHF frequency list page, press R6 (CIPH CTRL) key to display cipher control page 1.

3. If WODs or MWODs must be loaded, perform the following:

NOTE

HQ1 WODs or HQ2 MWODs should be entered, not both.

a. On CDU page displayed with cipher control page 1, enter 1 into the entrypad, then press L1 for HQ1 SEG number.

b. Enter the WOD (segment) and press L2 (HQ1 WOD) key.

c. Repeat steps a. and b. until all HQ1 WOD segments are entered (minimum of 2 and maximum of 6). HQ1 has no date WOD.

d. On MFD cipher control page 1, press L1 (PROG HQ1) key to load HQ1 WODs. The following tones should be heard:

(1) A 3125 Hz beep.

(2) A 3125 Hz beep per WOD except for the last WOD will be a double 3125 Hz beep (indicates the last WOD was loaded); simultaneously, the CDU HQ1 SEG number will increment as each WOD is loaded and the WOD SEG will remain at last value entered, then revert to 000.000.

(3) A final 3125 HZ beep indicates the radio is ready to resume normal operation.

e. Perform steps a. through c. for HQ2 MWODs. HQ2 can hold up to 6 days of MWODs. (A maximum of 6 MWODs or a minimum of 3 MWODs must be used.) Repeat this step until all MWODs for each required day is entered.

f. Press L2 (PROG HQ2) key to load HQ2 days and WODs. The following tones should be heard:

(1) A 3125 Hz beep.

(2) A 3125 Hz beep per MWOD except for the last MWOD will be a double 3125 Hz beep (indicates the last MWOD was loaded); simultaneously, the CDU HQ2 SEG number will increment as each MWOD is loaded and the MWOD SEG will remain at last value entered, then revert to 000.000.

(3) A final 3125 HZ beep indicates the radio is ready to resume normal operation.

NOTE

Steps 4. and 5. below do not apply to HQ1 operation.

4. To select HQ2 DATE for use, perform the following:

a. Enter date into CDU entrypad, then press L3 (HQ2 DATE) key.

b. Press MFD L4 (XMIT HQ2 DATE) key which loads the radio with the MWODs for that day. (A triple 3125 Hz beep should be heard.)

5. To verify HQ2 DATE WODs, perform the following:

a. Enter date into CDU entrypad, then press L3 (HQ2 DATE) key.

b. Press MFD L3 (VER HQ2 DATE) key and verify correct tones (one beep indicates an MWOD with that date group is not loaded; two beeps indicate an MWOD with that date group is loaded).

c. Repeat steps a. and b. to verify all WODs for each day entered.

6. If required, select KY-58 variable per mission requirements.

7. On the CDU page, enter into the entrypad the HQ NET NUM number and press R3 key. The

same numbered value must be entered into all stations operating together. The value of 00.000 is a viable number and can be used.

8. Initial TOD entry.

   a. Press MFD L4 key on UHF control page to display UHF MAIN.

   b. Enter broadcast frequency (time signal set (TSS) or reference signal generator (RSG)) into the entrypad, then press CDU L2 (UHF) key. (If TSS or RSG is not in the automatic mode, request TOD transmission from the TSS or RSG operator.)

   c. Press MFD R2 (HQ T*) key to activate HQ tone, after five seconds legend adjacent to R2 key displays HQ T; however, TOD can be received for 60 seconds.

   d. Listen for a short 1667 Hz tone (TOD) followed by a 1020 Hz tone. If tones are not heard, make a second request and repeat step c.

9. TOD update from another radio with TOD.

   a. Request TOD in HQ active or normal mode.

   b. Press MFD R2 (HQ T*) key to activate HQ tone, after five seconds legend adjacent to R2 key displays HQ T; however, TOD can be received for 60 seconds.

   c. Other radio activates the TONE key to transmit TOD. Sender will hear a 1667 Hz tone.

   d. Listen for a short 1667 Hz tone (TOD) followed by a 1020 Hz tone. If tones are not heard, make a second request and repeat step b.

10. Transmit TOD to another radio or generate an emergency startup TOD.

NOTE

The receiving radio must activate MFD R2 (HQ T*) key within 60 seconds prior to TOD transmission.

   a. Press MFD R1 (TONE) key, 1667 Hz tone (TOD) will be heard.

   b. If establishing an emergency startup TOD, MFD R2 (HQ T*) key must be activated and MFD R1 (TONE*) key pressed within 5 seconds to reset the radio's internal clock and transmit the TOD to other net radios.

11. Press R3 (HQ A*, asterisk will appear when active) key to activate HQ mode. (A steady 3125 Hz tone will be heard in the headsets if the WODs/MWODs are incorrect or TOD is not present. A 3125 Hz pulsating tone (4 Hz rate) indicates an invalid net number.)

3-61. Voice Security Equipment TSEC/KY-58 (Integrated).

The TSEC/KY-58 security equipment is located in the nose avionics compartment. The KY-58s provide secure transmissions for the SINCGARS radio, VHF radio, and UHF-AM radio. A complete description of the TSEC/KY-58 can be found in TM 11-5810-262-OP. The secure mode for these radios can be turned on and off via a respective control and frequency list pages for each radio. Other KY-58 controls and parameters are primarily controlled from cipher control pages 1, 2, and 3 along with the respective CDU pages. The No.1, No.2, and No.3 KY-58s operate in conjunction with the SINCGARS, VHF, and UHF radios respectively. Power to operate the KY-58 is provided by the No.2 dc monitor bus, No.2 dc primary bus, and No.1 dc primary bus through circuit breakers on the cabin overhead, pilot, and copilot circuit breaker panels respectively. Circuit breakers are labeled No.1 VHF SEC KY-58 (KY-S), No.2 SEC KY-58 (KY-U), and UHF SEC KY-58 (KY-V).

3-62. KY-58 MFD and CDU Control Pages.

There are three MFD and three CDU cipher control pages that establish the operating parameters for the KY-58 radios. Two of the CDU pages are the CDU default pages. Primary access to the cipher control pages is provided through the HSD, VSD, or HVR primary page, MFD VHF control page, MFD UHF control page, then via the UHF or VHF frequency list page. Refer to paragraph 3-59, HAVE QUICK MFD and CDU Control Pages, for details on cipher control page 1 operation if required. Cipher control page 1 determines the method for loading the KY-58 variables for local or remote loading. This page only provides access to modify KY-58 parameters if the variables are loaded via the DTM.

a. Cipher Control Page 2. The cipher control pages allow setting the operating parameters of the KY-58 radios

and accessing the VHF and UHF frequency list pages (Figure 3-30).

KEY/LEGEND	FUNCTION
	MFD Page
L1 (KY-U RATE 8 or 16)	Press to select the digital data transfer rate (KY-U RATE 8 or 16) for the No.2 KY-58 (UHF radio). Sixteen (16) is the fastest data transfer rate, both receiving and transmitting radios should be set to the same data rate.
L2 (KY-V RATE 8 or 16)	Same as L1 key except used with the No.3 KY-58 (VHF radio).
L5 (VHF LIST)	Press to access the VHF frequency list which allows changing the VHF radio frequencies and accesses the VHF tune key (R1).
L6 (UHF LIST)	Press to access the UHF frequency list which allows changing the UHF radio frequencies and accesses the UHF tune key (R1).
L7 (NEXT)	Press to access cipher control page 2.
R1 (KY-U MODE BB or DI)	Press to select the No.2 KY-58 for FM base band (BB) or AM di-phase (DI) operation. Operation depends upon VHF radio mode.
R2 (KY-V MODE BB or DI)	Same as R1 key except used with the No.3 KY-58. Operation depends upon the UHF radio mode.
R4 (KY-S LOAD LOC or REM)	Press to select the No.1 KY-58 for remote (REM) or local (LOC) loading. REM - Allows variables to be loaded from a master transmitter. LOAD - Allows variables to be loaded from the No.1 KY-58 control panel.
R5 (KY-U LOAD LOC or REM)	Same as R4 key except used with the No.2 KY-58.
R6 (KY-V LOAD LOC or REM)	Same as R4 key except used with the No.3 KY-58.
R7 (RTN)	Press to return to the HSD, VSD, or HVR primary page.
L3, L4, and R3	Not used.
	CDU Pages
L1 thru L4 and R1 thru R4	Standard CDU default pages line key entries. Refer to paragraph 3-45, CDU Default Pages, for more details.

b. MFD and CDU Cipher Control Page 3. The cipher control pages allow setting the operating parameters of the KY-58 radios and accessing the VHF and UHF frequency list pages (Figure 3-30).

KEY/LEGEND	FUNCTION
	MFD Page
L1 (KY-S TIME DLY)	Press to activate the retransmit capability of the No.1 KY-58 (KY-S TIME DLY*, asterisk will appear when active).
L2 (KY-U TIME DLY)	Same as L1 key except used with the No.2 KY-58.
L3 (KY-V TIME DLY)	Same as L1 key except used with the No.3 KY-58.
L5 (VHF LIST)	Press to access the VHF frequency list which allows changing the VHF radio frequencies and accesses the VHF tune key (R1).
L6 (UHF LIST)	Press to access the UHF frequency list which allows changing the UHF radio frequencies and accesses the UHF tune key (R1).
L7 (NEXT)	Press to access cipher control page 2.
R7 (RTN)	Press to return to the HSD, VSD, or HVR primary page.
L4, R1 thru R6	Not used.
	CDU Pages
L1 thru L4 and R1 thru R4	Standard CDU default pages line key entries. Refer to paragraph 3-45, CDU Default Pages, for more details.

3-63. KY-58 Normal Operations.

Preset channels, frequencies, and MFD controls may be accessed by the collective and cyclic controls. Refer to paragraph 3-13, Cyclic and Collective Grips MFD Controls, for more details if required. The following procedures describe the MFD and CDU keys used for normal operation the KY-58 radios:

1. Power on the KY-58 radios using the procedures outlined under the equipment status pages if required.

2. Establish normal operation for the SINCGARS, VHF, or UHF radio. Refer to the respective radio procedure if required.

3. From the MFD VHF or UHF frequency list page, press R6 (CIPH CTRL) key to display cipher control page 1.

4. If the KY-58s require local or remote loading, perform the following using the appropriate KY-58:

   a. Local loading:

      (1) R3 (for SINCGARS radio), R4 (for VHF radio), and/or R5 (for UHF radio) on cipher control page 1 - Press to select LOAD.

      (2) L7 (NEXT) key - Press to display cipher page 2.

      (3) R3, R4, and/or R5 (same as (1) above) on cipher control page 2 - Press to select LOC.

      (4) On the respective KY-58 control panel, press keys as required to load all variables.

      (5) Press MFD L7 (NEXT) key until cipher control page 1 is displayed.

   b. Remote loading, variable 6 of the respective KY-58 must have been initially loaded:

NOTE

Remote loading requires coordination with a transmitting station capable of transmitting variables. Communications must be established prior to the loading process. During the loading process, the pilot must not key the radio set of the KY-58 being loaded.

      (1) R3 (for SINCGARS radio), R4 (for VHF radio), or R5 (for UHF radio) on cipher control page 1 - Press to select RCV.

      (2) On the CDU, enter 6 into the entrypad, then press R4 (DEST NET VAR).

      (3) L7 (NEXT) key - Press to display cipher page 2.

      (4) R3, R4, or R5 (same as (1) above) on cipher control page 2 - Press to select REM.

      (5) Request the transmitting station to send the new variables. Each KY-58 must be loaded via the respective radio. Several beeps should now be heard in the headset. This means that the old variable is being replaced with a new one.

5. Set cipher control page 2 operating parameters per mission requirements.

6. Press MFD L7 (NEXT) key to display cipher control page 3.

7. Set cipher control page 3 operating parameters per mission requirements.

8. The following list consist of tones in which the pilot may heard when using a KY-58:

   a. Continuous beeping with background noise is a cryptoalarm. Continuous beeping occurs when power is first applied to the KY-58 or when the KY- 58 is zeroized. This beeping is part of normal KY-58 operation. To clear this tone, press and release the PTT switch twice.

   b. A beep followed by hollow background noise while the KY-58 is being used with a radio, normally means the secure mode is working properly.

   c. A continuous tone indicates a parity alarm. A continuous tone will occur whenever a

variable is not loaded for the selected position.

3-64. HF Radio Set.

The HF radio set (AN/ARC-199) is a high frequency unit which is capable of duplex communications operations. The HF radio set uses a long tubular antenna for transmitting and receiving voice and data communications. This antenna is located on the left side of the fuselage on the transition section. The receiver/transmitter is tunable from 2.0 to 29.9999 MHz in 100 KHz increments. When the HF radio is used, the duplex capability allows transmitting and receiving information simultaneously. A receive frequency must enter with the transmit frequency to allow this operation. Output power is selectable at three levels of 4, 40, and 150 watts peak envelope power. Communication is available upper sideband (USB) and lower sideband (LSB) and amplitude modulation (AM). Up to 20 frequencies can be created as preset channels and stored in nonvolatile memory in the mission processor, frequencies are also stored in the receiver/transmitter for scan capability. The HF radio antenna can be electronically tuned to match its transmitting frequency. When a new frequency is chosen or reception is poor, the antenna tune function should be used for the current channel. A KY-75 provides secure transmission for the HF radio. Power to operate the HF radio is provided by the No.1 dc monitor bus through a circuit breaker marked HF R/T AMP on the cabin overhead circuit breaker panel.

3-65. HF Modes of Operations.

a. Modulation Modes. The HF radio can use AM, LSB, or USB mode for transmissions. The pilot should set a mode which provides clear reception between the two stations. During certain terrain and weather conditions, one mode might provide clearer communications.

b. Scan Mode. The receiver can be operated in a SCAN mode where it will continuously scan through those frequencies selected for scanning During normal scanning, each frequency is monitored for 2.5 seconds before proceeding to the next scan frequency. Selective calling (SELCAL) frequencies are monitored for 1 second before proceeding to the next scan frequency. As the scan frequency changes, the frequency will be displayed at the bottom of the MFD.

c. Selective Calling (SELCAL). This mode only allows the receive radio with the correct four-character selective address code to communicate with the transmitting station. When a SELCAL code is transmitted, only the HF radios with the proper codes are alerted and able to communicate with the transmitting radio. The HF radio must have squelch off to enable reception of SELCAL transmissions.

3-66. HF MFD and CDU Control Pages.

There are three MFD and two CDU pages that provide most of the controls required to select the operating parameters for the HF radio. Primary access to the HF control pages is provided by the HSD, VSD, or HVR primary page and then via the MFD VHF control page. In addition, other radio control and frequency list pages provide access to these pages. Those keys will be identified during the explanation of the respective page. The CDU page is automatically displayed when the MFD page appears.

a. HF Control Page. The HF control pages allow setting the operating parameters of the HF radio and accessing other radio control pages (Figure 3-31).

KEY/LEGEND	FUNCTION
	MFD Page
L1 (HF USB, LSB, or AM)	Press to select the modulation mode (HF LSB, USB, or AM) for the HF frequency.
	NOTE When operating the HF radio in secure mode, squelch must be disabled in order to receive deciphered messages.
L2 (CLR or SEC)	Press to select the clear (CLR) or secure (SEC) mode of communication for the HF radio.
L3 (SCAN)	Press to activate the automatic scan mode for the HF radio (SCAN*, asterisk will appear when active).
L4 (PWR LO, MED, or HI)	Press to select the transmitter power level for the selected modulation mode. The power levels are mode-dependent as shown: LO: AM 2 watts, USB/LSB 4 watts MED: AM 10 watts, USB/LSB 40 watts HI: AM 43 watts, USB/LSB 150 watts
L5 (VHF COMM)	Press to access the VHF radio control page.
L6 (UHF COMM)	Press to access the UHF radio control page.

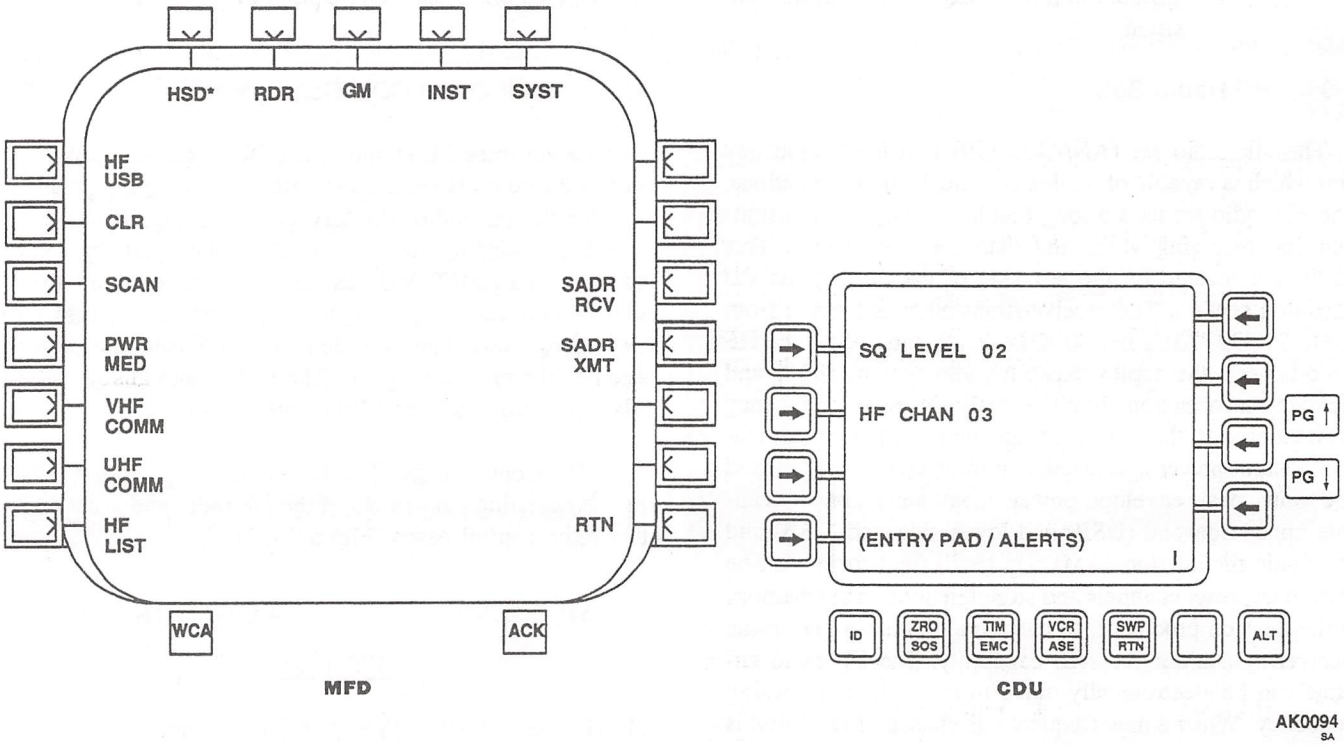

Figure 3-31. HF Control Pages

KEY/LEGEND	FUNCTION
L7 (HF LIST)	Press to access the HF frequency list page.
R3 (SADR RCV)	Press to activate the SELCAL address receive mode for the HF radio (SADR RCV*, asterisk will appear when active).
R4 (SADR XMT)	Press to activate the SELCAL address transmit mode for the HF radio (SADR XMT*, asterisk will appear when active).
R7 (RTN)	Press to return to the HSD, VSD, or HVR primary page.
R2 thru R6	Not used.

KEY/LEGEND	FUNCTION
	CDU Page
L1 (SQ LEVEL)	Press to enter the squelch level value from the entrypad for the HF radio. Entrypad data range: 0 to 15; the pilot should select the value that eliminates the rushing noise when no transmissions are being received. (Note: secure operation using the KY-75 requires SQ LEVEL to be set at zero.)
L2 (HF CHAN)	Press to enter the channel from the entrypad for the HF radio. Entrypad data range: 0 to 20.

KEY/LEGEND	FUNCTION
L4 (Entrypad/Alerts)	Standard CDU default pages line key. Refer to paragraph 3-45, CDU Default Pages, for more details.
L3, R1 thru R4	Not used.

b. HF Frequency List Pages. The HF frequency list pages allow selecting the preset operating frequencies, tuning the radio to these frequencies, adding or changing preset frequencies, and accessing other radio control pages (Figure 3-32). MFD page 1 and 2 are identical in functions and operation; therefore, only one page will be shown.

KEY/LEGEND	FUNCTION
	MFD Page
L1 (SEQ▲)	Press to move the pointer up adjacent to the desired preset location for additions, changes, or selection.
L2 (CHAN▼)	Press to move the pointer down adjacent to the desired preset location for additions, changes, or selection.
L3 (MAINT TUNE CHAN)	Press to tune the HF antenna to the frequencies adjacent to the pointer (MAINT TUNE CHAN*, asterisk will appear during tuning).
L4 (MAINT TUNE)	Press to tune the HF antenna to the best band range to accommodate all of the frequencies on the HF frequency list pages (MAINT TUNE*, asterisk will appear during tuning). (MAINT TUNE takes up to 2 minutes per channel and will return to Channel 1 upon completion. On the bottom of the MFD, verify each of the pragrammed frequencies are displayed during maintenace tune. Channels 1 through 10 are tuned when WOW is enabled, and channels 11 through 20 when WOW is disabled).
L5 (VHF COMM)	Press to access the VHF radio control page.
L6 (UHF COMM)	Press to access the UHF radio control page.
L7 (HF COMM)	Press to access the HF radio control page.
R1 (TUNE HF)	Press to select the channel/ frequency adjacent to the pointer for the HF radio.
R2 (MODE)	Same as L1 key on HF radio control page, however, assign the modulation the preset adjacent to the pointer and is displayed under MOD column.
R3 (PWR LVL)	Same as L4 key HF radio control page, however, assigns a power level to the preset adjacent to the pointer and is displayed under PWR column.
R4 (SCAN CHAN)	Press to select the receiver frequency adjacent to the pointer to become one of the frequencies the scan mode will monitor. SCN column will identify all frequencies to be monitored during the scan mode.
R5 (PG▲)	Press to return to the previous HF frequency list page.
R6 (PG▼)	Press to access the next HF frequency list page.
R7 (RTN)	Press to return to the primary HSD, VSD, or HVR page.
	CDU Page
L1 (XMIT FREQ)	Press to enter the transmitter frequency from the entrypad for the HF frequency list. Entrypad data range: 2.0000 to 29.9999 MHz tunable in 100 KHz increments.
L2 (RECV FREQ)	Press to enter the receiver frequency from the entrypad for the HF frequency list. Entrypad data range: 2.0000 to 29.9999 MHz tunable in 100 KHz increments.
L3 (APPL)	Press to enter a name from the entrypad (up to eleven characters) to be assigned to a particular channel in the frequency list.
L4 (Entrypad/Alerts)	Standard CDU default pages line key. Refer to paragraph 3-45, CDU Default Pages, for more details.

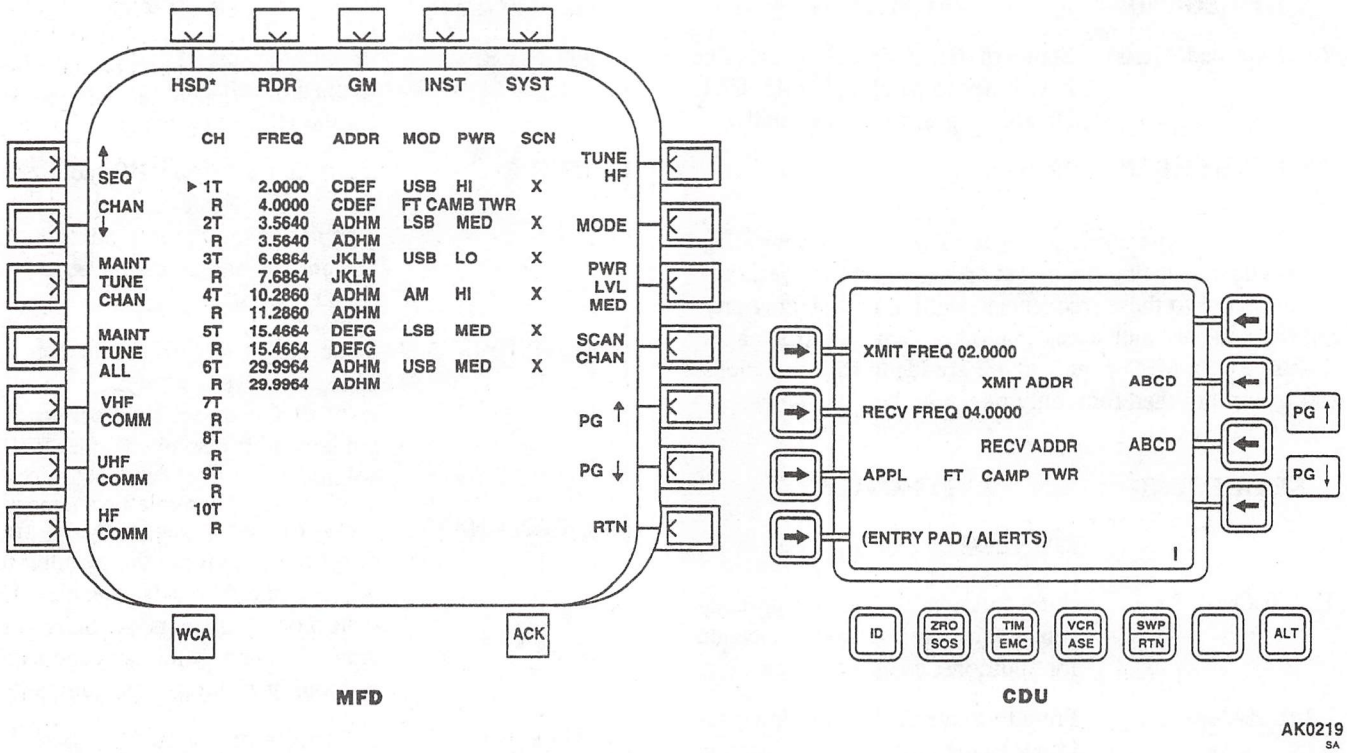

Figure 3-32. HF Frequency List Pages

KEY/LEGEND	FUNCTION
R2 (XMIT ADDR)	Press to enter the SELCAL code from the entrypad to be used with the preset transmitter frequency into the HF frequency list. Entries must consist of any four letters from A to M (except I) with no repeats.
R3 (RECV ADDR)	Press to enter the SELCAL code from the entrypad to be used with the preset receiver frequency into the HF frequency list. Entries must consist of any four letters from A to M (except I) with no repeats.
R1 and R4	Not used.

3-67. HF Normal Operation.

Preset channels, frequencies, and MFD controls may be accessed by the collective and cyclic controls. Refer to paragraph 3-13, Cyclic and Collective Grips MFD Controls, for more details if required. The following procedures describe the MFD and CDU keys used for normal operation of the HF radio:

WARNING

During HF ground operation, ensure personnel are clear of the HF antenna. Contact with antenna may result in serious burns.

1. Press T1 (HSD, VSD, or HVR) key to display either of these primary pages.
2. Press L4 (COMM) key to display the VHF control page.
3. Press L7 (HF COMM) key to display the HF control page; establish the HF radio operating parameters per mission requirements.

4. For tuning of a known preset channel, enter channel number on the CDU page for the HF radio.

5. Press L7 (HF LIST) key to display the HF frequency list page.

6. To select a channel/frequency, sequence pointer adjacent to the desired channel/frequency.

7. To add or change frequencies on the HF LIST page, perform the following:

   a. Sequence pointer adjacent to an empty channel or a channel which requires modification.

   b. Enter new or changed data via the CDU page.

   c. Using the MFD R3 (PWR LVL) key, assign LO, MED, or HI power for new/changed frequency as required.

   d. Using the MFD R4 (SCAN CHAN) key, assign scan mode for new/changed frequency as required.

   e. Using the MFD R2 (MODE) key, assign LSB, USB, or AM for new/changed frequency as required.

   f. Repeats steps a. through f. for additional frequencies.

8. Select the desired radio channel/frequency for tuning by pressing R1 (TUNE HF) key.

NOTE

If automatic scan was selected under step 3. above, once an assign scan frequency is detected, the scan stops and the receiver remains locked onto the transmitting frequency. L4 (SCAN CHAN) key must be reactivated to resume scanning activities.

9. The CSC panel switches must be set to the appropriate positions for the HF radio to enable transmissions and/or receptions.

3-68. Airborne Target Handover System (ATHS) CP-1516/ASQ.

The ATHS provides the capability of rapidly and accurately formatting complex messages; for example, fire requests, movement commands, report summaries, free text messages, current situation/status messages, etc. ATHS messages or data are transmitted to and received from other ATHS equipped nets using compatible generic communication equipment. The ATHS is not a transmitter, but generates and receives digital data over the SINCGARS, VHF, UHF, or SATCOM radio. Hand held data message devices are also capable of transceiver operations with ATHS. Power to operate the system is routed from the No. 2 dc monitor bus through the ATHS labeled circuit breaker on the cabin overhead circuit breaker panel.

3-69. ATHS Capabilities.

a. ATHS General Capabilities: accept manual input (via CDU keyboard), bulk loading (via radio transmissions from another ATHS), or loading from a DTM; interface with 1553B data bus system; retain in nonvolatile memory mission essential data for active airborne artillery fire missions; accept, format, and initiate transmissions of ATHS messages/data over a selected radio to a predefined, compatible communication net; monitor selected radio to receive and acknowledge (when required) valid ATHS messages/data; and zeroize all ATHS data. The primary zeroizing capability is effected through the CDU zeroize page via the (L1) ALL or (L2) COMM PLAN key or through the ZEROIZE/EMERGENCY panel ALL switch actuation. The secondary zeroizing capability is provided via the START 1/2 page and accessing the ZEROIZE page.

b. ATHS Scout or Team Member Capabilities: request and execute standard ordnance airborne and artillery fire missions; request and provide coordination required to execute remote hellfire missions; display firing/launch constraints (separation angle, time of flight, range, and firing angle) for hellfire missions based on target position, attack position, and scout position; and transmit spot, situation, status, battle damage assessment, and casualty reports.

c. ATHS Team Leader or Command and Control Capabilities: can inherently perform as required any of the capabilities addressed in the example for scout or team member mission type activity, request reports from team members, maintain current situation report information on all team members, command team movement (move to, hold at, rendezvous at, etc.), and retain list of preplanned locations for use with movement commands.

d. ATHS Attack Capabilities: receive fire requests from compatible ATHS equipped capability; execute fire missions involving standard or hellfire ordnance; display firing or launch constraints (separation angle, time of flight, range, and firing angle) for hellfire missions based on target position, attack position, and scout position; and, without pilot intervention, select launch mode and set laser code of next hellfire to be launched based on received fire request.

3-70. ATHS Transmitting Characteristics.

There are some unique ATHS message and data transmitting characteristics. A TX0 annunciator, adjacent to the MFD R1 key, on a displayed MFD page identifies data transmitting capability. Each transmission is pilot initiated by depressing the MFD R6 key adjacent to XMIT MSG. The TX0 annunciator switches to showing the XMT annunciator, signifying that a transmission attempt is in progress. The XMT annunciator changes to TX1 and remains at when the transmission is unsuccessful. Subsequent failures will cycle to TX2 and TX3 and then back to TX0 after the fourth attempt. Successful transmitting requires originator and destination recipient have the same system initialization data entered into their start pages. Destination recipient automatically returns an acknowledgment (ACK identifier indicating message was received and stored) back to the originator, changing TX1 to ACK. The authentication code is displayed during message transmission when in manual authentication mode. The transmit authentication table line number is displayed when in the automatic authentication mode. The abbreviated identifier SUB0 (in lieu of TX0) appearance (with SUB flashing) signifies the destination subscriber has not been assigned into the net and is not defined. If no authentication is used, no code identifier will appear. Manual authentication mode requires authentication be entered before message transmission can take place. The manual authentication page appears on the initial transmission attempt. After entering the authentication code, repressing the line select R6 key adjacent to XMT MSG on the MFD transmits the message.

3-71. MFD and CDU ATHS Menu Control Page Access.

Access to ATHS mode is gained scrolling through one of the MFD primary control pages by pressing its T5 (SYST) key and subsequently pressing the L6 (ATHS MENU) key upon appearance of the System Menu 1 control page bringing up the MFD ATHS MENU control page with its augmenting CDU ATHS Menu control page (Figure 3-33). The following describes the control and function line select keys:

KEY/LEGEND	FUNCTION
	NOTE Both the symbol ">" situated on the left side and pointing to the right towards an entry field (e.g., ##.##, 00.0, or [T]); and, the symbol "<" situated on the right side and pointing to the left towards an entry field (e.g., ##.##, [free text field], or [Z]) require data entry from the CDU entrypad. The symbol "^" provides scrolling selection capability for that particular entry key (e.g., TFR versus AIR cycling for type of net).
	MFD Page
L1 (AIR REQ)	Accesses air request list page 1/3 (3 pages for 8 missions).
L2 (ARTY REQ)	Accesses artillery fire mission request page for use with artillery ground communication/TACFIRE systems.
L3 (MOVEMENT)	Accesses top menu page of the movement pages.
L4 (REPORTS)	Accesses top menu page of the reports pages.
L5 (ATHS LOAD)	Loads preplanned ATHS data from the DTM.
L6 (VIEW MSG)	Used to return to ATHS page that displays received messages.
L7 (FSK MUTE)	Mutes headphones during data transmission.
R1 (RCVD MSGS)	Accesses received messages page 1/4 (4 pages, up to 12 messages).
R2 (START)	Accesses start index page 1/2 (page 2/2 with multiple pages for initialization and setting up operating parameters).
R3 (STATUS)	Accesses status page (top menu for own & subscribers' position & weapons status up to 8 nets).

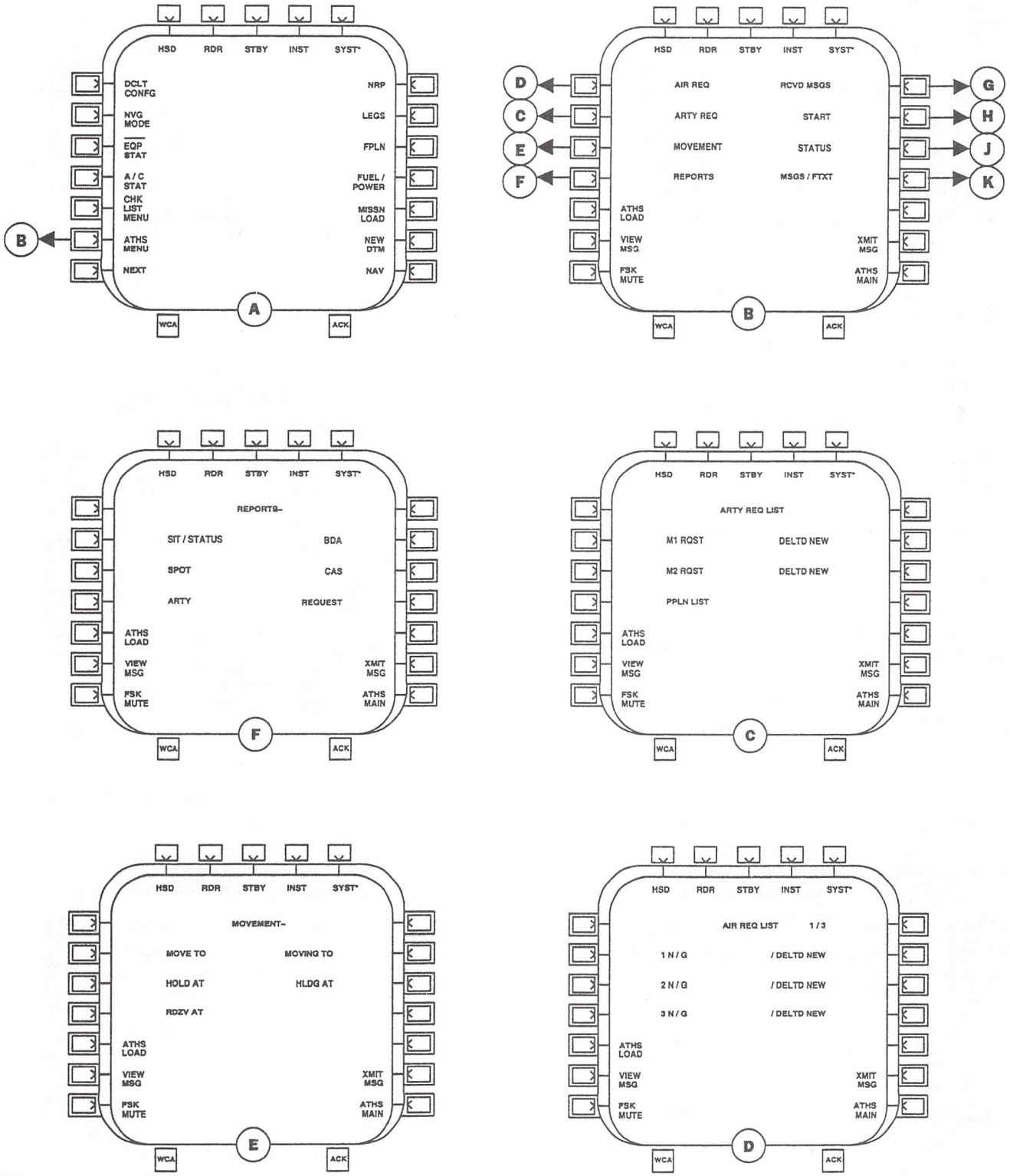

AK2519_1
SA

Figure 3-33. ATHS Top Menu Page Flows (Sheet 1 of 2)

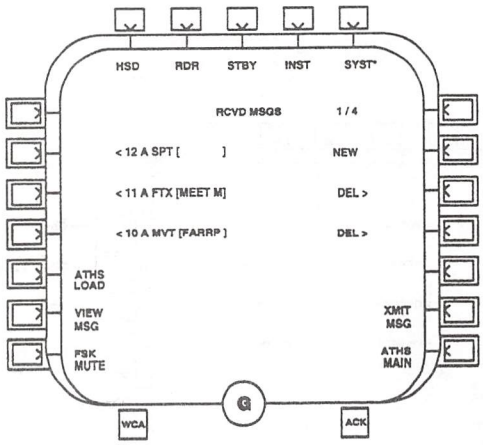

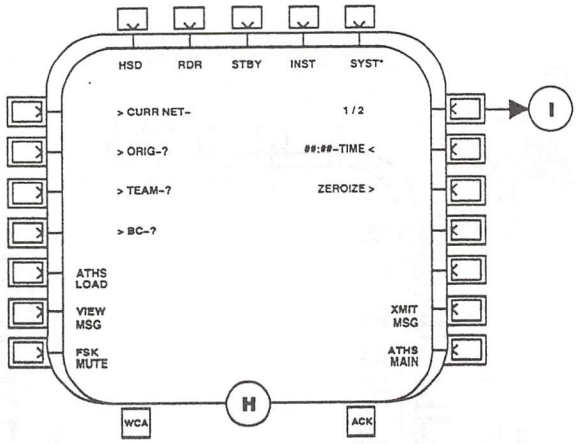

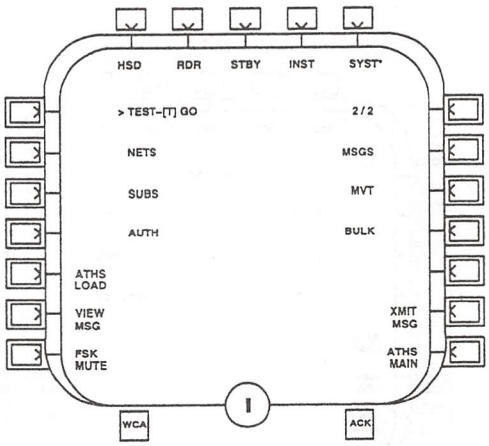

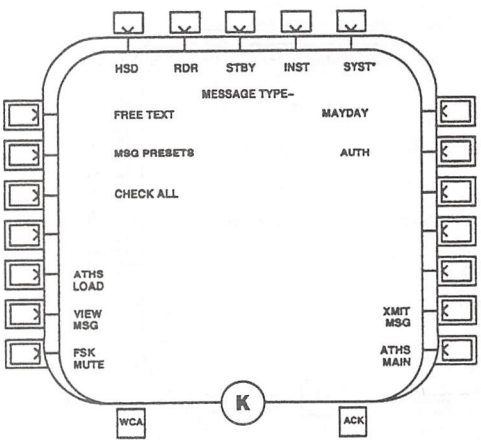

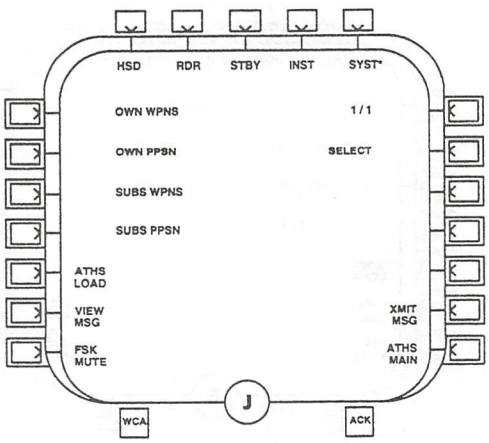

AK2519_2
SA

Figure 3-33. ATHS Top Menu Page Flows (Sheet 2 of 2)

KEY/LEGEND	FUNCTION
R4 (MSGS/FTXT)	Accesses special and unique messages for expedient use.
R6 (XMIT MSG)	Transmits messages via selected radio to another ATHS.
R7 (ATHS MAIN)	Returns to ATHS main menu for starting over, standing by, or getting out of complex paging that only allows exiting at the end page (e.g., 17 of 17 pages).
R5	Not used.

NOTE

The CDU defaults as shown in Figure 3-34 and functionally supports all ATHS MFD pages with the same capability.

CDU Page

L1 (BUFFER DATA)	For data entries that exceed the limits of the CDU entrypad, the BUFFER DATA key must be used in conjunction with the ENTER DATA key.
L2 (CLR FIELD)	Clears an existing free text entry in an ATHS MFD field that has just been activated by pressing its key and illuminating the asterisk identifier.
L4 (Entrypad/Alerts)	Standard CDU default pages line key. Refer to paragraph 3-45, CDU Default Pages, for more details.
R1 (ENTER DATA)	Enters CDU entrypad data into appropriate MFD entry fields.
L3, R2, R3, and R4	Not used.

3-72. ATHS Start Pages.

The two START pages are used to initialize system variables, to zeroize ATHS data, to input message and movement preset information, to transmit and receive bulk data transfers, and to input and manage authentication codes.

3-73. ATHS Initialization and Setting Up Transceiver Nets.

See Figure 3-35 (TEST, NETS STATUS, and SUB NET ASGNMTS Page Flows) for accessing appropriate pages as required.

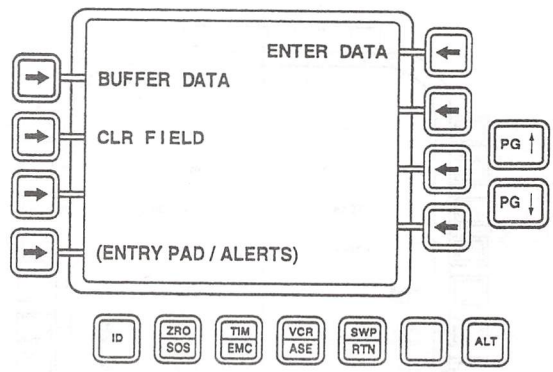

AK2520 SA

Figure 3-34. ATHS CDU Default Page

1. Press MFD T5 (SYST) key, then press MFD L6 (ATHS MENU) key.
2. Press R2 (START) key, accessing start 1/2 page.
3. Press R1 1/2 page scrolling key, selecting start 2/2 page.
4. Press L1 (TEST) key, activating line.
   a. Key into CDU entrypad the "T" key from CDU keyboard.
   b. Press CDU R1 (ENTER DATA) key, initiating test. (TEST is shown during test.)
   c. GO or NO GO signifies completed test status. (NO GO is accompanied with failure code displayed on line 2.)
5. Press L2 (NETS) key, accessing NET 1 status 1/8 page.
6. Enter following net data (up to 8 pages):
   a. Cycle press L1 (NET 1) key, selecting AIR (or TFR) net.

NOTE

Inadvertent TFR (TACFIRE) selection degrades ATHS capability in an intended defined AIR net. In like manner, inadvertent AIR selection will not provide sufficient integration required by a TACFIRE net.

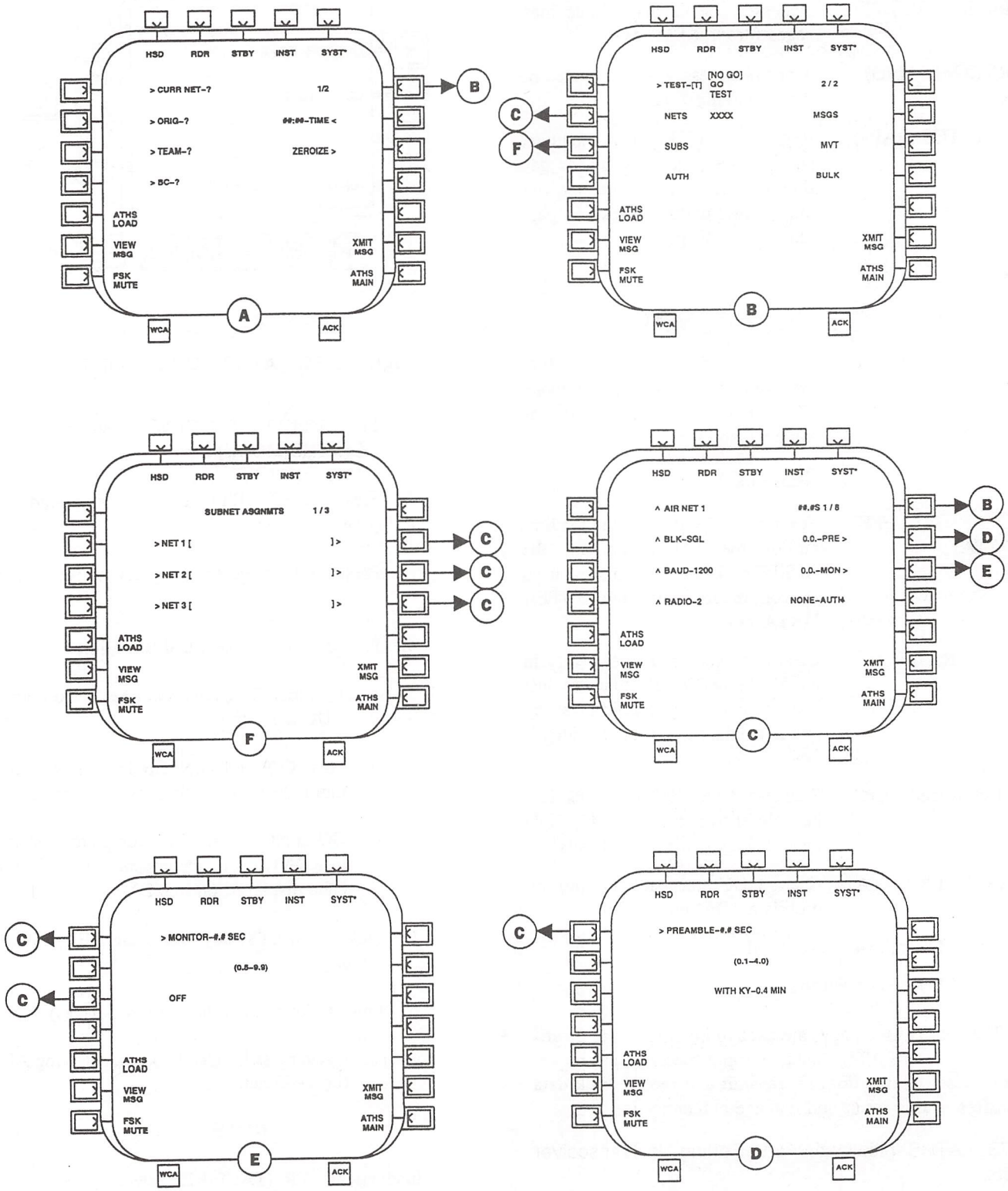

AK2521
SA

Figure 3-35. TEST, NETS STATUS, and SUB NET ASGNMTS Page Flows

b. Cycle press L2 (BLK) key, selecting SGL or DBL blocks. (Double block sends data segment twice during transmitting when atmospheric conditions or reception is poor.)

c. Cycle press L3 (BAUD) key, selecting 75, 150, 300, 600, or 1200 bits per second (bps) for AIR while 1200 automatically appears when TFR is selected as net type. (Normal settings, 600 or 1200. Settings less than 600 are not compatible with TACFIRE.)

d. Cycle press L4 (RADIO) key, selecting 1 (SINCGARS), 2 (UHF), 3 (VHF), or 4 (SATCOM).

e. Press R2 (PRE) key, accessing preamble entry page.

f. Press L1 (PREAMBLE) key, activating line.

NOTE

Minimum preamble on-air time of 0.4 seconds is required for secure transmitting.

(1) Key into CDU entrypad desired value from 0.1 through 4.0 seconds.

(2) Press CDU R1 (ENTER DATA) key, automatically returning to NET 1 status 1/8 page and showing entered value in #.#-PRE (adjacent R2 key). (Both digit values must be addressed, even with zeros to effect automatic return.)

g. Press R3 (MON) key, accessing monitor entry page.

h. Press L1 (MONITOR) key, activating line.

(1) Key into CDU entrypad desired value from 0.5 through 9.9 seconds. (Selected time ATHS listens for interfering traffic prior to sending. If monitored time exceeds 15 seconds, this capability resets automatically, requiring MFD R6 (XMIT MSG) key actuation again.)

(2) Press CDU R1 (ENTER DATA) key, automatically returning to NET 1 status 1/8 page and showing entered value in #.#-MON (adjacent R3 key).

i. To disable monitor function, press L3 (OFF) key. (Disables monitoring capability and returning to NET 1 status 1/8 page. ATHS will attempt to send as soon as MFD R6 XMIT MSG key is pressed.)

j. Cycle press R4 (AUTH) key, selecting MAN or NONE authentication capability.

NOTE

MAN selection provides displaying the MANUAL AUTH page right after R6 (XMIT MSG) key actuation and requires entering an authentication code into the L2 (AUTH-??) entry field via the CDU entrypad for each authenticated required destination transmission.

7. Press R1 1/8 page scrolling key, selecting NET 2 status 2/8 page or scrolling to applicable page (as required).

8. Enter each subsequent NET 2 through NET 8 status data as executed in step 6.

9. Press R1 NET 8/8 page scrolling key, returning to start 2/2 page.

10. Press L3 (SUBS) key, accessing subscriber net assignments 1/3 page.

11. Press L2, L3, or L4 (NET 1, 2, or 3) key, activating required net(s).

a. Key into CDU entrypad subscriber identifier. (Subscriber net assignments are required. Each net can be made up of 10 common subscribers; e.g., a section or platoon of aircraft. Include your origin identifier and identifiers for the team you are in and broadcast network you are to operate in. The eight communication nets can have up to a total of no more than 36 subscribers. TACFIRE subscribers must be on TFR (TACFIRE) defined nets in order to function efficiently with artillery nets.)

b. Press CDU R1 (ENTER DATA) key, entering your origin identifier, team network, and broadcast network into the appropriate

SUBNET ASGNMTS NET (1, 2, or 3) line.

12. Pressing R1 SUB NET ASGNMTS 1/3 page scrolling key provides access to the other 4th thru 6th subscriber net assignments on 2/3 page and 7th and 8th on 3/3 page.

13. Use the procedure in step 11 to set up subscriber parameters for a desired NET with origin identifier, team network, and broadcast network.

14. Cycle press R1 1/3 and/or 2/3 page scrolling key to access SUB NET ASGNMTS 3/3 page for setting up your automatic authentication on line L4.

15. Press L4 (AUTH SUB) key, activating line.

    a. Key into CDU entrypad that identifier which represents you in the net requiring your automatic authentication capability.

    b. Press CDU R1 (ENTER DATA) key, entering your identifier into line 4 AUTH SUB. This capability provides for selecting automatic authentication for one subscriber at a time. Usually this net selection is driven by high priority and/or expeditious operational characteristics (e.g., a TACFIRE artillery or command and control net).

16. Press R1 SUB NET ASGNMTS 3/3 page scrolling key, returning to start 2/2 page.

17. Press R1 start 2/2 page scrolling key, accessing start 1/2 page.

18. Press R2 (TIME) key, activating line.

    a. Key into CDU entrypad time of day (addressing all spaces, even with zeros and the colon with a period).

    b. Press CDU R1 (ENTER DATA) key, entering time of day into ##:##-TIME (R2). (Automatic time update occurs.)

19. Press L1 (CURR NET) key, activating line.

    a. Key into CDU entrypad current active net. (Enter net to be worked in, since the last net used will appear until changed.)

    b. Press CDU R1 (ENTER DATA) key, entering current active net into CURR NET-n (L1).

20. Press L2 (ORIG) key, activating line.

    a. Key into CDU entrypad your subscriber identifier.

    b. Press CDU R1 (ENTER DATA) key, entering your subscriber identifier into ORIG-? (L2).

21. Press L3 (TEAM) key, activating line.

    a. Key into CDU entrypad team identifier you are working in. (A team is a group of subscribers having same net data and same team identifier on this line.)

    b. Press CDU R1 (ENTER DATA) key, entering your team identifier into TEAM-? (L3).

22. Press L4 (BC) key, activating line.

    a. Key into CDU entrypad broadcast identifier you are working in. (A broadcast is a group of teams having same net data and same broadcast identifier on this line.)

    b. Press CDU R1 (ENTER DATA) key, entering your broadcast identifier into BC-? (L4).

3-74. ATHS Inputted Data Zeroizing.

See Figure 3-36 (ZEROIZE, MSG & MVMT PRESETs, and BULK DATA Transfer Page Flows) for accessing appropriate pages as required. The primary zeroizing capability is effected through the CDU Zeroize Page via the (L1) ALL or (L2) COMM PLAN key or through the ZEROIZE/EMERGENCY Panel COMM NAV or ALL switch actuation. The secondary zeroizing capability is addressed with the following procedures:

1. Press R7 (ATHS MAIN) key, accessing ATHS MENU control page.

2. Press R2 (START) key, accessing start 1/2 page.

3. Press R3 (ZEROIZE) key, accessing zeroize page.

4. Press L1 (ZEROIZE) key, activating line.

   a. Key into CDU entrypad letter Z.

   b. Press CDU R1 (ENTER DATA) key, clearing all ATHS data and automatically returning to start 1/2 page. (Net status data, subscriber assignments, originator address identifier, authentication tables, received messages, artillery missions, air missions, movement presets, and message presets become zeroized.)

   c. To abort zeroizing prior to entering Z, press R1 1/1 page scrolling key, returning to start 1/2 page.

5. Once zeroizing is effected, ATHS full usage capability requires reinitialization.

3-75. ATHS Message and Movement Preset Entries.

See Figure 3-36 (ZEROIZE, MSG & MVMT PRESETs, and BULK DATA Transfer Page Flows) for accessing required pages.

1. Press R7 (ATHS MAIN) key, accessing ATHS MENU control page.

2. Press R2 (START) key, accessing start 1/2 page.

3. Press R1 1/2 page scrolling key, selecting start 2/2 page.

4. Press R2 (MSGS) key, accessing MSG PRESET 1 FREE TEXT 1/6 page.

5. Press L3 (entry bracket) key, activating line (for up to 36 characters).

   a. Key into CDU entrypad free text not to exceed 20 characters and/or spaces per entry.

   b. Press CDU R1 (ENTER DATA) key, entering message into FREE TEXT field on 1/6 page.

6. Press R1 1/6 page scrolling key, selecting MSG PRESET 2 FREE TEXT 2/6 page or scrolling to applicable page (as required).

7. Repeat procedure in steps 4, 5, and 6 for entering each subsequent MSG PRESET 2 FREE TEXT through MSG PRESET 6 FREE TEXT.

8. Press R1 MSG PRESET 6 FREE TEXT 6/6 page scrolling key, returning to start 2/2 page.

9. Press R3 (MVT) key, accessing MVT PRESET 1 1/6 page.

10. Press L2 (entry bracket) key, activating line (16 characters).

    a. Key into CDU entrypad free text movement location description not to exceed 16 characters and/or spaces per entry.

    b. Press CDU R1 (ENTER DATA) key, entering message into line 2 field on 1/6 page.

11. Press L3 (entry bracket) key, activating line (16 characters).

    a. Key into CDU entrypad movement location data not to exceed 16 characters and/or spaces per entry.

    b. Press CDU R1 (ENTER DATA) key, entering message into line 3 field on 1/6 page.

12. Press R1 1/6 page scrolling key, selecting MVT PRESET 2 2/6 page or scrolling to applicable page (as required).

13. Enter each subsequent MVT PRESET 2 through MVT PRESET 6 data as executed in steps 10 and 11.

14. Press R1 MVT PRESET 6 6/6 page scrolling key, returning to start 2/2 page.

3-76. ATHS Bulk Data Transfer Transmit Procedures.

See Figure 3-36 (ZEROIZE, MSG & MVMT PRESETs, and BULK DATA Transfer Page Flows) for accessing required pages. Bulk data transferring capability provides up loading to one ATHS from another. The following are possible entities that can be bulk transferred: up to 10 designated subscribers per subscriber net in the 8 possible subscriber nets on 3 BULK DATA SUB/NETS pages, up to 6 message presets on 6 BULK DATA MSG PRESET pages, up to 6 movement presets on 6 BULK DATA MVMT PRESET pages, up to 100 receive automatic authentication codes on 6 BULK DATA RX AUTH TBL pages, and up to 100 transmit automatic authentication codes on 6 BULK DATA TX TBL pages.

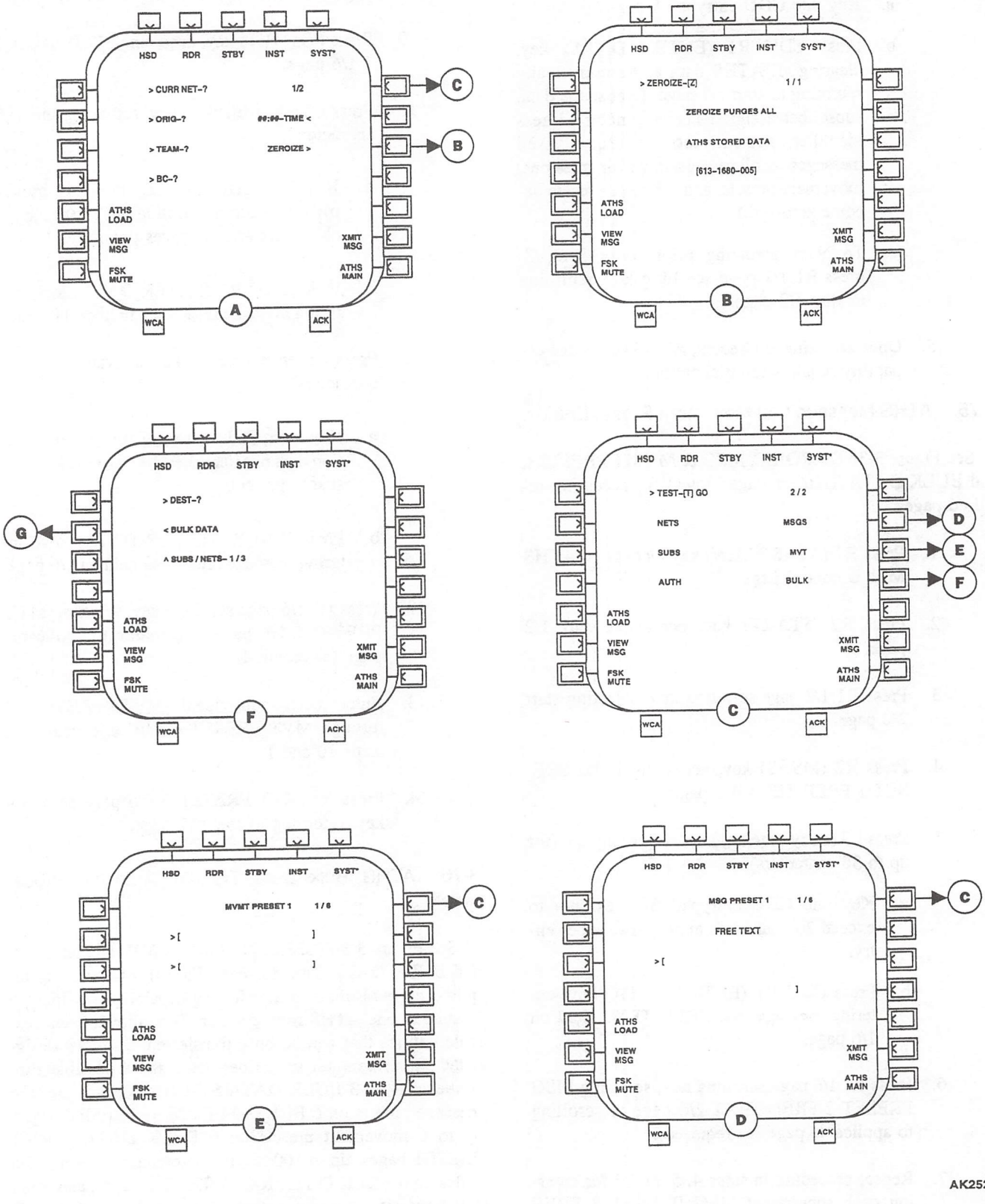

AK2522_1
SA

Figure 3-36. ZEROIZE, MSG & MVMT PRESETS, and BULK DATA Transfer Page Flows (Sheet 1 of 2)

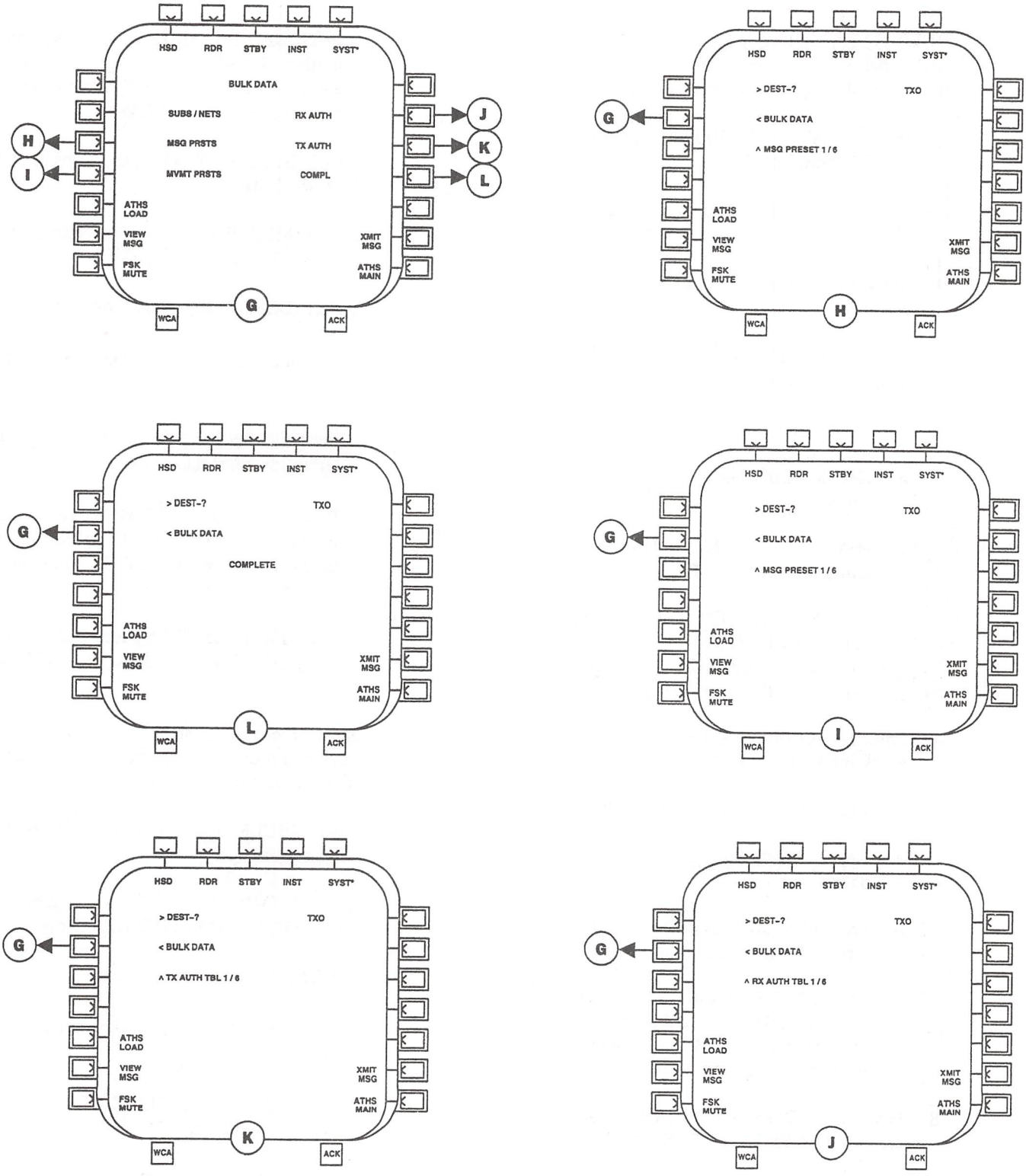

AK2522_2
SA

Figure 3-36. ZEROIZE, MSG & MVMT PRESETS, and BULK DATA Transfer Page Flows (Sheet 2 of 2)

NOTE

Receiving ATHS must be on the same BULK DATA summary page as accessed by step 4 below. When bulk data is received, line 3 will display the incoming data type.

1. Press R7 (ATHS MAIN) key, accessing ATHS MENU control page.
2. Press R2 (START) key, accessing start 1/2 page.
3. Press R1 1/2 page scrolling key, selecting start 2/2 page.
4. Press R4 (BULK) key, accessing BULK DATA SUBS/NETS 1/3 page.
5. Press L1 (DEST-?) key, activating line.
   a. Key into CDU entrypad identifier of destination.
   b. Press CDU R1 (ENTER DATA) key, entering identifier into DEST-?.
   c. Press MFD R6 (XMIT MSG) key, transmitting SUBS/NETS 1/3 page bulk data to and receiving the ACK (R1) annunciation from the destination ATHS.
6. Press L3 SUBS/NETS 1/3 page scrolling key, accessing BULK DATA SUBS/NETS 2/3 page.
7. Press L1 (DEST-?) key, activating line.
   a. Key into CDU entrypad identifier of destination.
   b. Press CDU R1 (ENTER DATA) key, entering identifier into DEST-?.
   c. Press MFD R6 (XMIT MSG) key, transmitting SUBS/NETS 2/3 page bulk data to and receiving the ACK (R1) annunciation from the destination ATHS.
8. Press L3 SUBS/NETS 2/3 page scrolling key, accessing BULK DATA SUBS/NETS 3/3 page.
9. Press L1 (DEST-?) key, activating line.
   a. Key into CDU entrypad identifier of destination.
   b. Press CDU R1 (ENTER DATA) key, entering identifier into DEST-?.
   c. Press MFD R6 (XMIT MSG) key, transmitting SUBS/NETS 3/3 page bulk data to and receiving the ACK (R1) annunciation from the destination ATHS.
10. Press L2 (BULK DATA) key, accessing BULK DATA select page.
11. Press L3 (MSG PRSTS) key, accessing BULK DATA MSG PRESET 1/6 page.
12. Press L1 (DEST-?) key, activating line.
    a. Key into CDU entrypad identifier of destination.
    b. Press CDU R1 (ENTER DATA) key, entering identifier into DEST-?.
    c. Press MFD R6 (XMIT MSG) key, transmitting MSG PRESET 1/6 page bulk data to and receiving the ACK (R1) annunciation from the destination ATHS.
13. Press L3 MSG PRESET 1/6 page scrolling key, accessing BULK DATA MSG PRESET 2/6 page.
14. Repeat procedure in steps 11, 12, and 13 to complete the data transfer from the remaining bulk data message preset pages.
15. Press L2 (BULK DATA) key, accessing BULK DATA select page.
16. Press L4 (MVMT PRSTS) key, accessing BULK DATA MVMT PRESET 1/6 page.
17. Press L1 (DEST-?) key, activating line.
    a. Key into CDU entrypad identifier of destination.
    b. Press CDU R1 (ENTER DATA) key, entering identifier into DEST-?.
    c. Press MFD R6 (XMIT MSG) key, transmitting MVMT PRESET 1/6 page bulk data to and receiving the ACK (R1) annunciation from the destination ATHS.

18. Press L3 MVMT PRESET 1/6 page scrolling key, accessing BULK DATA MVMT PRESET 2/6 page.

19. Repeat procedure in steps 16, 17, and 18 to complete the data transfer from the remaining bulk data movement preset pages.

20. Press L2 (BULK DATA) key, accessing BULK DATA select page.

21. Press R2 (RX AUTH) key, accessing BULK DATA RX AUTH TBL 1/6 page.

22. Press L1 (DEST-?) key, activating line.

    a. Key into CDU entrypad identifier of destination.

    b. Press CDU R1 (ENTER DATA) key, entering identifier into DEST-?.

    c. Press MFD R6 (XMIT MSG) key, transmitting RX AUTH TBL 1/6 page bulk data to and receiving the ACK (R1) annunciation from the destination ATHS.

23. Press L3 RX AUTH TBL 1/6 page scrolling key, accessing BULK DATA RX AUTH TBL 2/6 page.

24. Repeat procedure in steps 21, 22, and 23 to complete the data transfer from the remaining bulk data receive authentication table pages.

25. Press L2 (BULK DATA) key, accessing BULK DATA select page.

26. Press R3 (TX AUTH) key, accessing BULK DATA TX AUTH TBL 1/6 page.

27. Press (DEST-?) key, activating line.

    a. Key into CDU entrypad identifier of destination.

    b. Press CDU R1 (ENTER DATA) key, entering identifier into DEST-?.

    c. Press MFD R6 (XMIT MSG) key, transmitting RX AUTH TBL 1/6 page bulk data to and receiving the ACK (R1) annunciation from the destination ATHS.

28. Press L3 TX AUTH TBL 1/6 page scrolling key, accessing BULK DATA TX AUTH TBL 2/6 page.

29. Repeat procedure in steps 26, 27, and 28 to complete the data transfer from the remaining bulk data receive authentication table pages.

30. Press L2 (BULK DATA) key, accessing BULK DATA select page.

31. Press R4 (COMPL) key, accessing BULK DATA COMPLETE page.

32. Press L1 (DEST-?) key, activating line.

    a. Key into CDU entrypad identifier of destination.

    b. Press CDU R1 (ENTER DATA) key, entering identifier into DEST-?.

    c. Press MFD R6 (XMIT MSG) key, transmitting COMPLETE page to and receiving the ACK (R1) annunciation from the destination ATHS.

3-77. ATHS Authentication Code Presets Loading.

See Figure 3-37 (AUTHENTICATION XMT and RCV Code Presets Page Flows) for entering authentication codes or accessing an appropriate page as required.

NOTE

An annunciation, reading as AUTH TABLE LOW, is displayed on the MFD, bottom right alert line(s), shown on HSD, VSD, HVR, and/or ATHS MENU control pages when the authentication tables (XMT & RCV) have less than 20 authentication codes remaining.

1. Press R7 (ATHS MAIN) key, accessing ATHS MENU control page.

2. Press R2 (START) key, accessing start 1/2 page.

3. Press R1 1/2 page scrolling key, selecting start 2/2 page.

4. Press L4 (AUTH) key, accessing AUTHENTICATION control entry page.

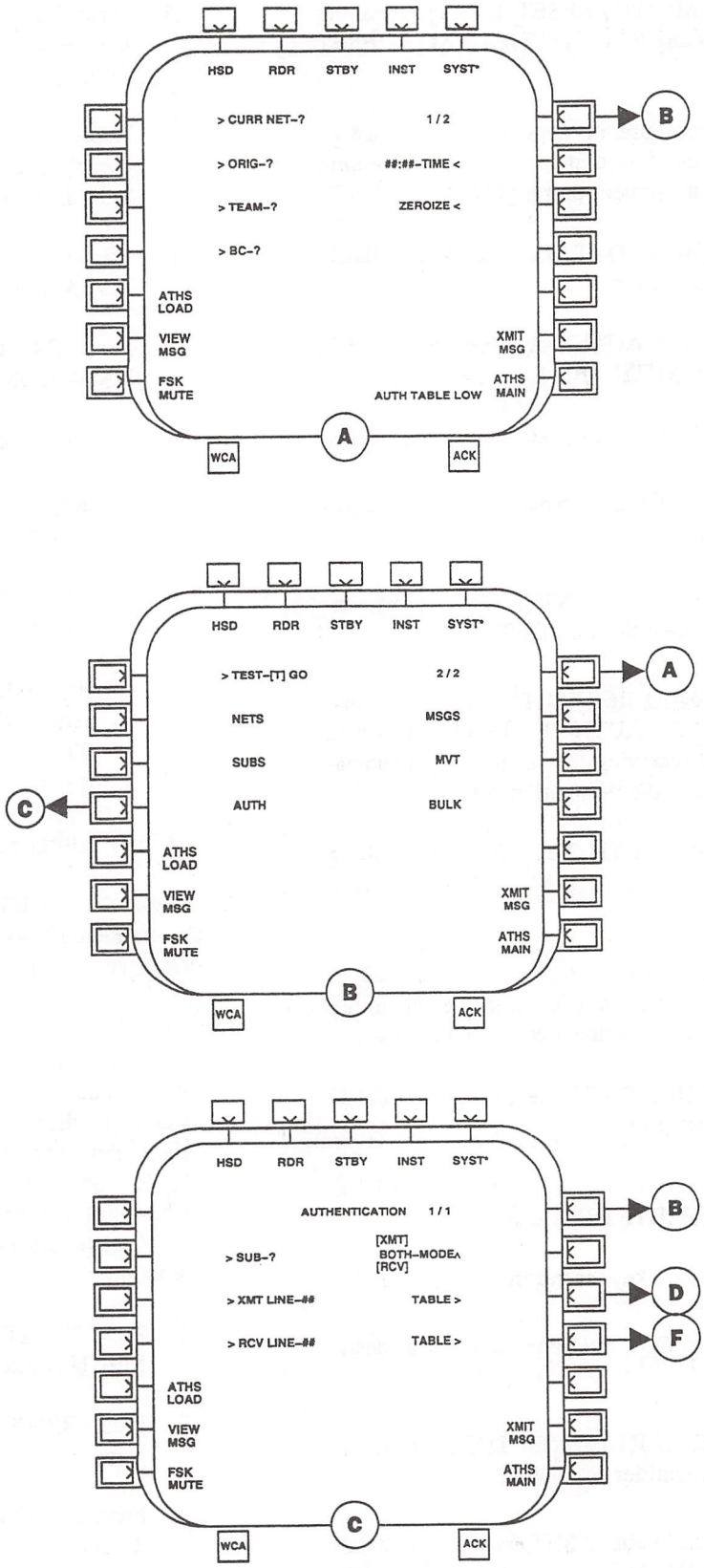

Figure 3-37. AUTHENTICATION XMT and RCV Preset Page Flows (Sheet 1 of 2)

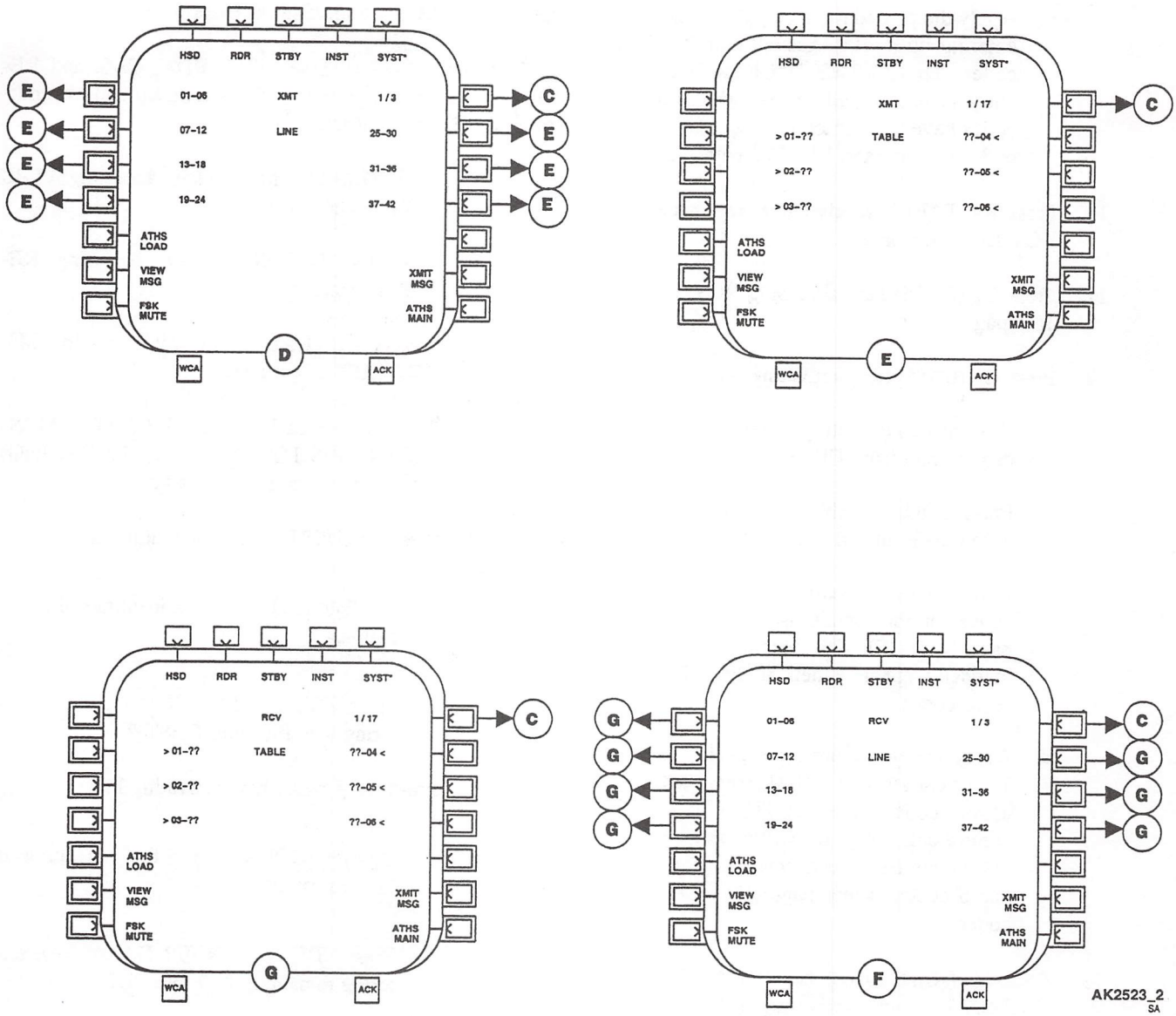

Figure 3-37. AUTHENTICATION XMT and RCV Preset Page Flows (Sheet 2 of 2)

5. Press L1 (SUB) key, activating line.

   a. Key into CDU entrypad the subscriber identifier.

   b. Press CDU R1 (ENTER DATA) key, entering the identifier into SUB-?.

6. Cycle press R2 (MODE) key, selecting BOTH (from options of XMT, BOTH, or RCV).

7. Press R3 TABLE transmit line key, accessing XMT LINE 1/3 page.

8. Press L1 (01-06) key, accessing XMT TABLE.

9. Press L2 (01-??) key, activating line.

   a. Key into CDU entrypad transmit authentication code from communication and electronic operating instructions (CEOI).

   b. Press CDU R1 (ENTER DATA) key, entering code into 01-??.

   c. Continue by activating lines and entering codes for the remaining 5 entries on this page (1 of 17). The next page will automatically appear when all lines have transmit codes.

d. Apply the procedure in steps 7, 8, and 9 for entering up to 100 transmit authentication codes. The AUTHENTICATION control entry page 1/1 will appear when all 100 codes have been entered. (Each page has 6 codes except page 17 of 17 with 4 codes.)

10. Press R4 TABLE receive line key, accessing RCV LINE 1/3 page.

11. Press L1 (01-06) key, accessing RCV TABLE 1/17 page.

12. Press L2 (01-??) key, activating line.

    a. Key into CDU entrypad receive authentication code from CEOI.

    b. Press CDU R1 (ENTER DATA) key, entering code into 01-??.

    c. Continue by activating lines and entering codes for the remaining 5 entries on this page (1 of 17). The next page will automatically appear when all lines have receive codes.

    d. Apply the procedure in steps 10, 11, and 12 for entering up to 100 receive authentication codes. The AUTHENTICATION control entry page 1/1 will appear when all 100 codes have been entered. (Each page has 6 codes except page 17 of 17 with 4 codes.)

13. Press L3 (XMT LINE) key (on AUTHENTICATION 1/1 page), activating line.

    a. Key into CDU entrypad 01 transmitting line number.

    b. Press CDU R1 (ENTER DATA) key, entering 01 into XMT LINE-??.

    c. Press L4 (RCV LINE) key, activating line.

    d. Key into CDU entrypad 01 receiving line number.

    e. Press CDU R1 (ENTER DATA) key, entering 01 into RCV LINE-??.

14. Pressing R1 AUTHENTICATION 1/1 page key returns to start page 2/2.

3-78. ATHS Situation/Status Report.

See Figure 3-38 (SIT/STATUS, BDA, CAS, and REQUEST Reports Page Flows) for setting up and transmitting ATHS situation/status reports.

1. Press R7 (ATHS MAIN) key, accessing ATHS MENU control page.

2. Press L4 (REPORTS) key, accessing REPORTS page.

3. Press L2 (SIT/STATUS) key, accessing MY ACTIVITY select page.

4. Press L2 (HOLDING) key, L3 (CONT MSN) key, L4 (OBS TGT) key, or R2 (ENGAGING) key, accessing SIT report page.

5. Press L1 (DEST-?) key, activating line.

    a. Key into CDU entrypad identifier of destination.

    b. Press CDU R1 (ENTER DATA) key, entering identifier into DEST-?.

6. Press L2 (FUEL) key, activating line.

    a. Key into CDU entrypad fuel remaining to the nearest 10 pounds.

    b. Press CDU R1 (ENTER DATA) key, entering remaining fuel into FUEL field.

7. L3 ACT entry shows previously selected activity. To change, press L3 (ACT) key, returning to MY ACTIVITY page for reselection and return to this SIT page.

8. L4 AT entry shows your present position; pressing L4 (AT) scrolling key accesses range and bearing to selected subscriber.

9. Pressing R2 (WPNS) key accesses OWN weapons status for review and/or update, returning via R1 1/1 page key.

10. Press MFD R6 (XMIT MSG) key, transmitting SIT report to and receiving the ACK (R1) annunciation from the destination ATHS.

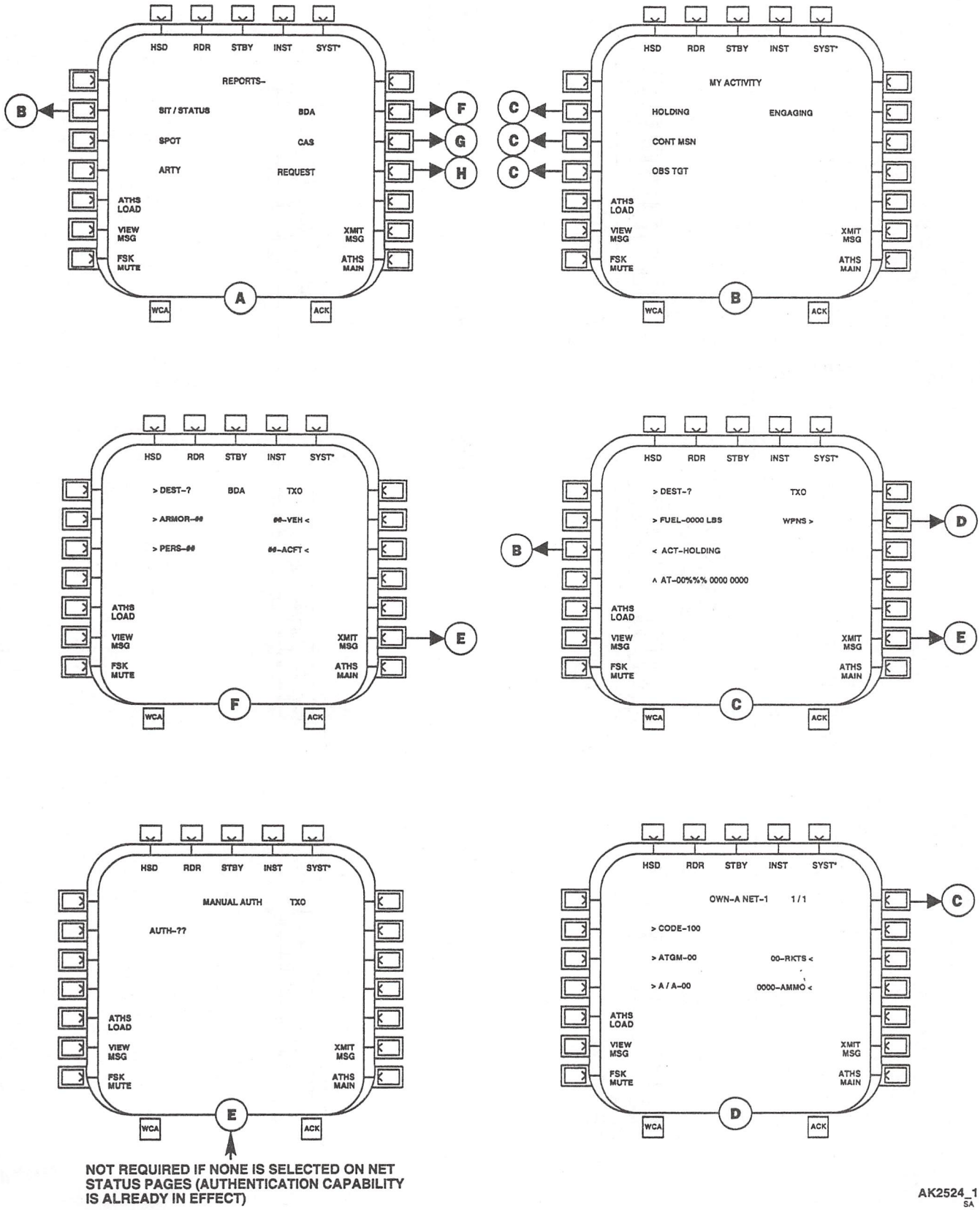

Figure 3-38. SIT/STATUS, BDA, CAS, and REQUEST Reports Page Flows (Sheet 1 of 2)

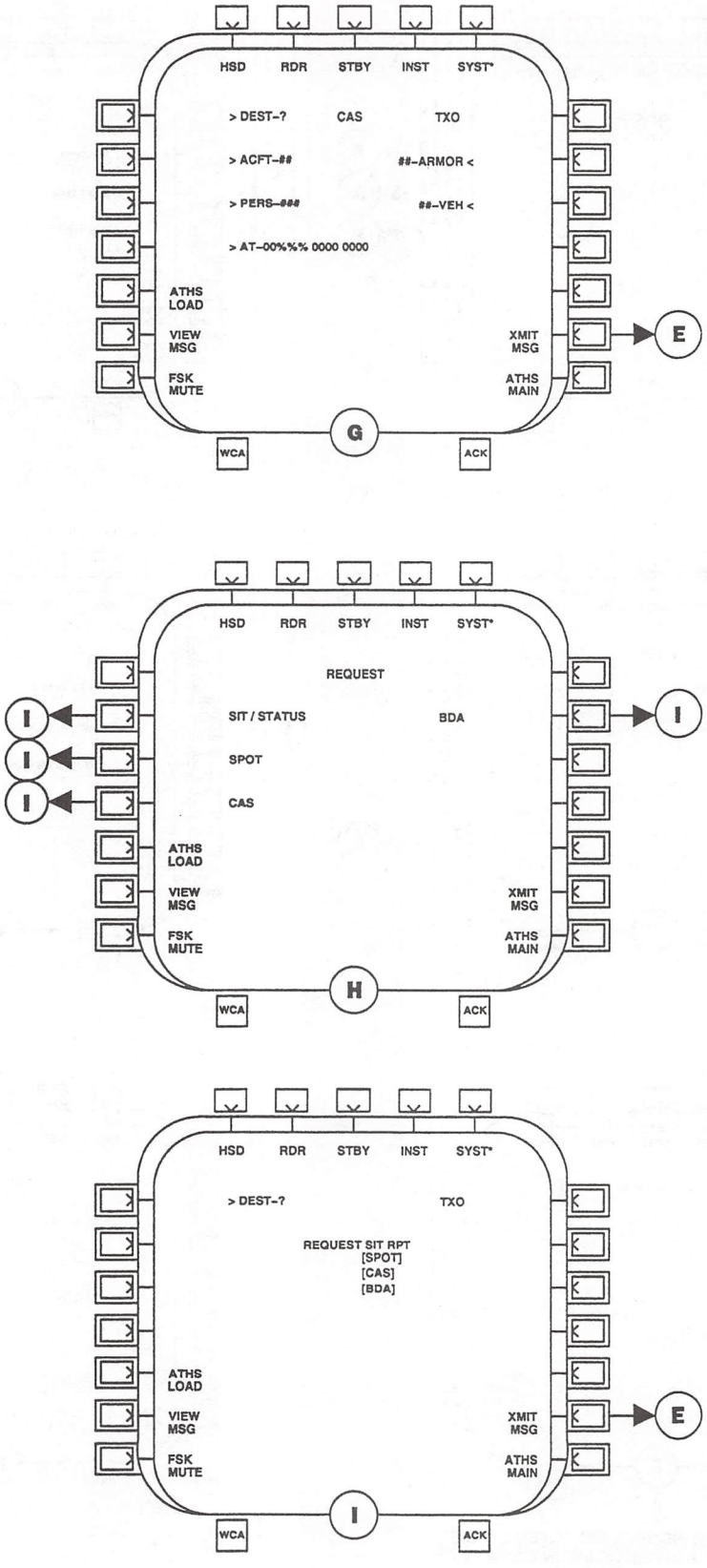

Figure 3-38. SIT/STATUS, BDA, CAS, and REQUEST Reports Page Flows (Sheet 2 of 2)

3-79. ATHS Battle Damage Assessment Report.

See Figure 3-38 (SIT/STATUS, BDA, CAS, and REQUEST Reports Page Flows) for setting up and transmitting ATHS battle damage assessment reports.

1. Press R7 (ATHS MAIN) key, accessing ATHS MENU control page.
2. Press L4 (REPORTS) key, accessing REPORTS page.
3. Press R2 (BDA) key, accessing BDA page.
4. Press L1 (DEST-?) key, activating line.
   a. Key into CDU entrypad identifier of destination.
   b. Press CDU R1 (ENTER DATA) key, entering identifier into DEST-?.
5. Press L2 (ARMOR) key, L3 (PERS) key, R2 (VEH) key, or R3 (ACFT) key, selecting type of target and activating line.
   a. Key into CDU entrypad number damaged.
   b. Press CDU R1 (ENTER DATA) key, entering number into selected field.
6. Press MFD R6 (XMIT MSG) key, transmitting BDA report to and receiving the ACK (R1) annunciation from the destination ATHS.
7. Repeat for other required type of targets using steps 5 and 6.

3-80. ATHS Casualty Report.

See Figure 3-38 (SIT/STATUS, BDA, CAS, and REQUEST Reports Page Flows) for setting up and transmitting ATHS casualty reports.

1. Press R7 (ATHS MAIN) key, accessing ATHS MENU control page.
2. Press L4 (REPORTS) key, accessing REPORTS page.
3. Press R3 (CAS) key, accessing CAS page.
4. Press L1 (DEST-?) key, activating line.
   a. Key into CDU entrypad identifier of destination.
   b. Press CDU R1 (ENTER DATA) key, entering identifier into DEST-?.
5. Press L2 (ACFT) key, L3 (PERS) key, R2 (ARMOR) key, or R3 (VEH) key, selecting type of casualties and activating line.
   a. Key into CDU entrypad number of casualties.
   b. Press CDU R1 (ENTER DATA) key, entering number into selected field.
6. Press MFD R6 (XMIT MSG) key, transmitting CAS report to and receiving the ACK (R1) annunciation from the destination ATHS.
7. Repeat for other required type of casualties using steps 5 and 6.

3-81. ATHS (Sit/Status, Spot, CAS, and BDA) Report Request.

See Figure 3-38 (SIT/STATUS, BDA, CAS, and REQUEST Reports Page Flows) for setting up and transmitting ATHS report requests.

1. Press R7 (ATHS MAIN) key, accessing ATHS MENU control page.
2. Press L4 (REPORTS) key, accessing REPORTS page.
3. Press R4 (REQUEST) key, accessing REQUEST page.
4. Press L2 (SIT/STATUS) key, L2 (SPOT) key, L3 (CAS) key, or R2 (BDA) key, selecting type of report.
5. Press L1 (DEST-?) key, activating line.
   a. Key into CDU entrypad identifier of destination.
   b. Press CDU R1 (ENTER DATA key), entering identifier into DEST-?.
6. Press MFD R6 (XMIT MSG) key, transmitting report requests to and receiving the ACK (R1) annunciation from the destination ATHS.
7. Repeat for other required type of report requests using steps 5 and 6.

3-82. ATHS Spot Report.

See Figure 3-39 (SPOT Report Page Flows) for setting up and transmitting ATHS spot reports.

1. Press R7 (ATHS MAIN) key, accessing ATHS MENU control page.
2. Press L4 (REPORTS) key, accessing REPORTS page.
3. Press L3 (SPOT) key, accessing TARGET 1/3 page (N/G, ADA, ARMOR, VEHICLE, ARTY, and PERSONNEL targets). (N/G means not given.)
   a. Pressing R1 1/3 page key accesses TARGET 2/3 page (MORTAR, WEAPON, RKT/MSL, EQUIP, ASSEMBLY, and CENTER targets).
   b. Pressing R1 2/3 page key accesses TARGET 3/3 page (SPECIAL, SUPPLY, TERRAIN, BUILDING, and BRIDGE targets).
4. Pressing L2 N/G key on TARGET 1/3 page accesses TGT ACTIVITY, bypassing target STR (strength) magnitude page. Proceed to step 10.
5. Pressing L3 (ADA) key, L4 (ARMOR) key, R2 (VEHICLE) key, R3 (ARTY) key, or R4 (PERSONEL) key on TARGET 1/3 page accesses target STR (strength) magnitude page. Proceed to step 9.
6. Pressing L2 (MORTAR) key, L3 (WEAPON) key, or L4 (RKT/MSL) key on TARGET 2/3 page accesses target STR (strength) magnitude page. Proceed to step 9.
7. Pressing R2 (EQUIP) key, R3 (ASSEMBLY) key, or R4 (CENTER) key on TARGET 2/3 page accesses TGT ACTIVITY, bypassing target STR (strength) magnitude page. Proceed to step 10.
8. Pressing L2 (SPECIAL) key, L3 (SUPPLY) key, L4 (TERRAIN) key, R2 (BUILDING) key, or R3 (BRIDGE) key on TARGET 3/3 page accesses TGT ACTIVITY, bypassing target STR (strength) magnitude page. Proceed to step 10.
9. Press L1 (STR-1-9) key, L2 (N/G) key, L3 (10) key, L4 (25) key, R1 (50) key, R2 (100) key, R3 (250) key, or R4 (500) key, selecting magnitude for selected target and automatically accessing TGT ACTIVITY page. Proceed to step 10 or 11 as applicable.
10. Pressing L2 (STATIONARY) key or L4 (DUGIN) key accesses SPOT report summary page. Proceed to step 15.
11. Pressing L3 (MOVING) key accesses TGT MVG direction page.
12. Press L1 (NORTH) key, L2 (NW) key, L3 (WEST) key, L4 (SW) key, R1 (NE) key, R2 (EAST) key, R3 (SE) key, or R4 (SOUTH) key, selecting direction which automatically accesses TGT SPEED page.
13. Pressing L1 (TGT SPEED) key activates this line.
    a. Key into CDU entrypad the speed in kilometers per hour.
    b. Press CDU R1 (ENTER DATA) key, entering speed into TGT SPEED-##KM/H which automatically accesses SPOT report summary page. Proceed to step 15.
14. Pressing L2 (N/G) key selects speed as not given and automatically accesses SPOT report summary page.
15. Press L1 (DEST-?) key, activating line.
    a. Key into CDU entrypad identifier of destination.
    b. Press CDU R1 (ENTER DATA) key, entering identifier into DEST-?.
16. Press MFD R6 (XMIT MSG) key, transmitting SPOT report to and receiving the ACK (R1) annunciation from the destination ATHS.

3-83. ATHS Air Request.

See Figure 3-40 (Air Request Page Flows) for setting up and transmitting air requests. Up to eight new air and/or hellfire missions may be defined or existing missions modified via the air request pages. Pressing the left line keys adjacent to the desired mission number on one of the AIR

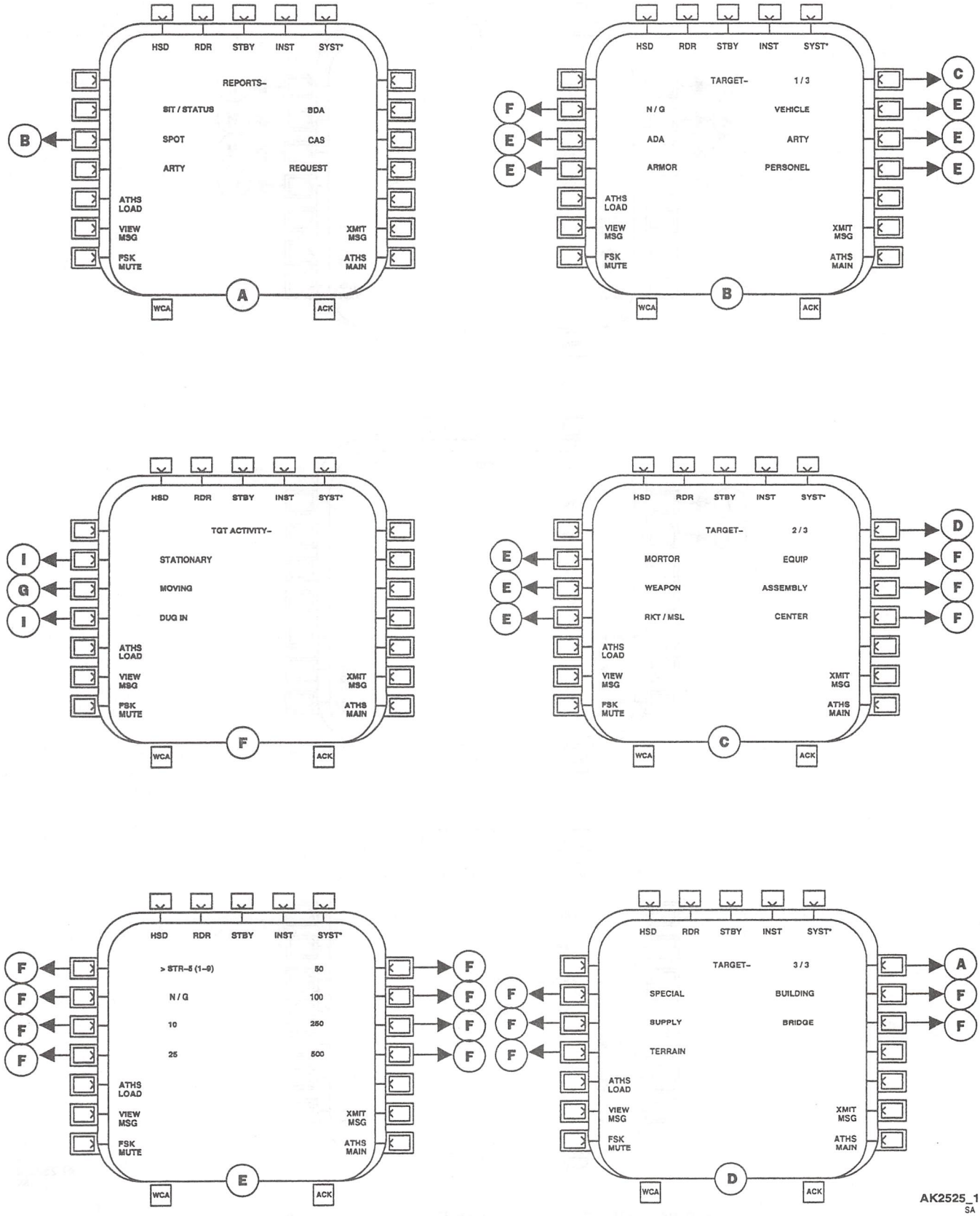

AK2525_1
SA

Figure 3-39. SPOT Report Page Flows (Sheet 1 of 2)

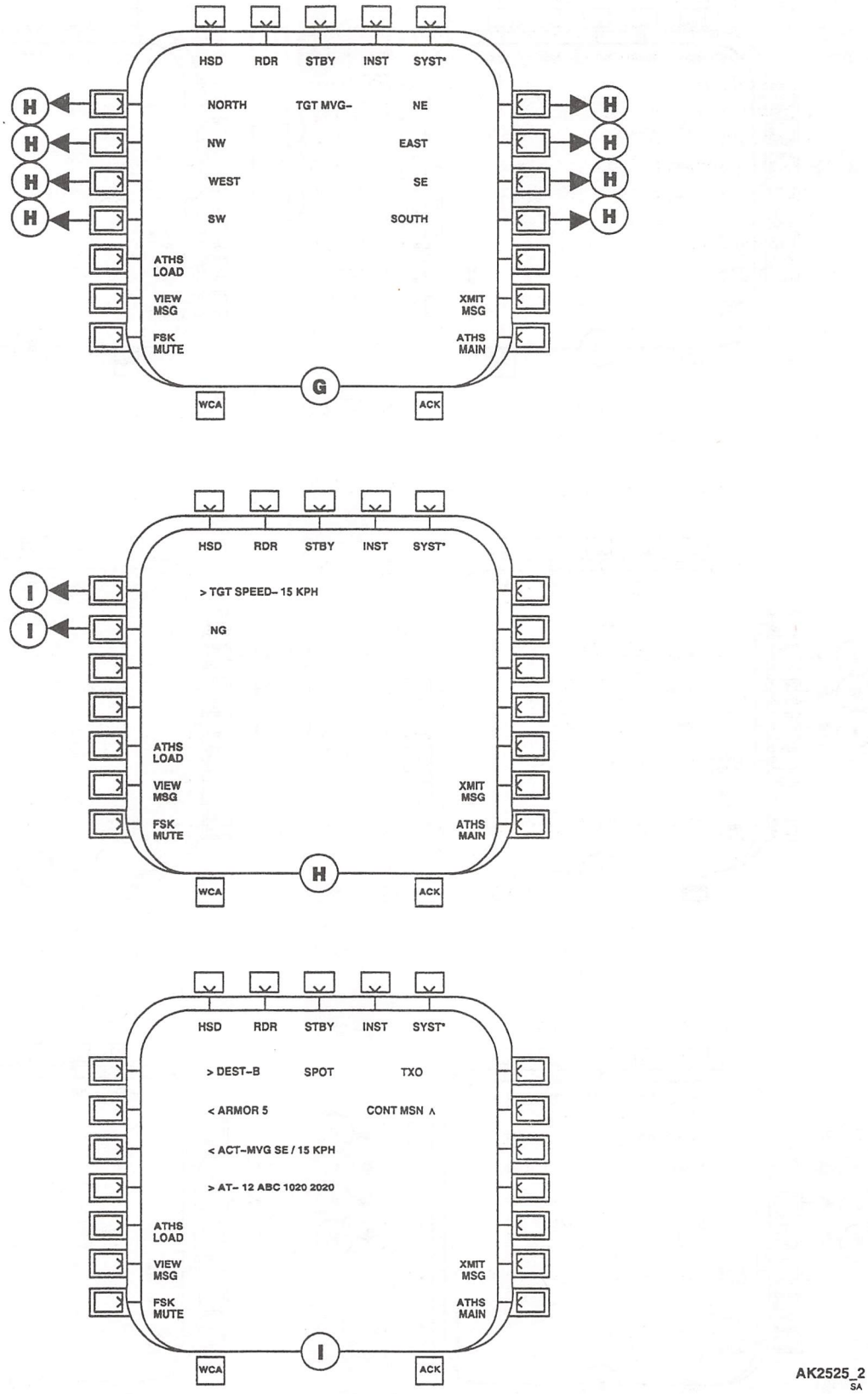

AK2525_2
SA

Figure 3-39. SPOT Report Page Flows (Sheet 2 of 2)

REQ LIST pages accesses the previously stored air mission request(s) or hellfire mission request(s) pages. Complete mission request information is displayed. Pressing the right line keys adjacent to NEW accesses the MSN TYPE page for initiating a new air or hellfire mission request. Initiating a new mission requires the pilot to select a mission type, enter the required parameters, review the request page, and transmit the data. The following entries address an example of creating a new hellfire mission request which can be subsequently reviewed as a defined mission (shown on the left side of the AIR REQ LIST page) and changed from a READY status to a TOT (time-on-target) status request. The originator is also the laser designator for this hellfire mission.

1. Press R7 (ATHS MAIN) key, accessing ATHS MENU control page.
2. Press L1 (AIR REQ) key, accessing AIR REQ LIST 1/3 page.
3. Press R2 (NEW) key, accessing MSN TYPE page (for first mission if not assigned).
4. Press L2 (REMOTE HLFR) key, accessing air ROUNDS entry page.
5. Press L1 (ROUNDS) key, activating line. (Pressing L2 selects N/G for not given instead.)
   a. Key into CDU entrypad number of rounds.
   b. Press CDU R1 (ENTER DATA) key, entering number into ROUNDS entry field and automatically accessing air mission summary page.
6. Press R2 (FIRE CONTROL) key, accessing air mission control summary page.
7. Cycle press L2 (CONT) key, selecting LOAL for lock on after launch (versus lock on before launch) control of the missile.
8. Cycle press L3 (MODE) key, selecting RPD for rapid multiple rounds firing in succession (versus single or ripple firing choice).
9. Cycle press R2 (ANG) key, selecting DIR, LO, or HI for direct, low, or high angle of missile launch.
10. Press R3 (CODE) key, activating line.
    a. Key into CDU entrypad the code for laser code identifier.
    b. Press CDU R1 (ENTER DATA) key, entering code into CODE entry field.
11. Press R1 1/1 page key, returning to air mission summary page.
12. Pressing R3 (TARGET TYPE) key accesses target description summary page for entering target category type. hellfire missions automatically enter N/G-TGT and require this key actuation to enter target description.
13. Press L2 (TGT) key, accessing TARGET 1/3 page.
14. Press L4 (ARMOR) key, selecting ARMOR target description and automatically accessing STR target magnitude (strength) page.
15. Press L1 (STR) key, activating line.
    a. Key into CDU entrypad the number 2 for the armored (tank) vehicles.
    b. Press CDU R1 (ENTER DATA) key, entering target magnitude and automatically returning to air target description summary page, showing TGT-ARMOR (L1) and STR-2 (L2) as the entries.
16. Press R1 1/1 page key, returning to air mission summary page, showing 2-ARMOR (R3) entry.
17. Press R4 (OWN RNG/BRG TO TGT) key, accessing TGT PSN 1/1 page.
18. Press L2 key (grid coordinate entry field), activating line.
    a. Key into CDU entrypad UTM grid coordinates of target location.
    b. Press R1 CDU (ENTER DATA) key, entering target location.
19. Press L3 (RANGE) key, activating line.
    a. Key into CDU entrypad the laser designation range to the nearest tenth in kilometers.

NEW REMOTE HELLFIRE MSN REQ (CONTROLLED BY OTHER THAN LAUNCHING ELEMENT)

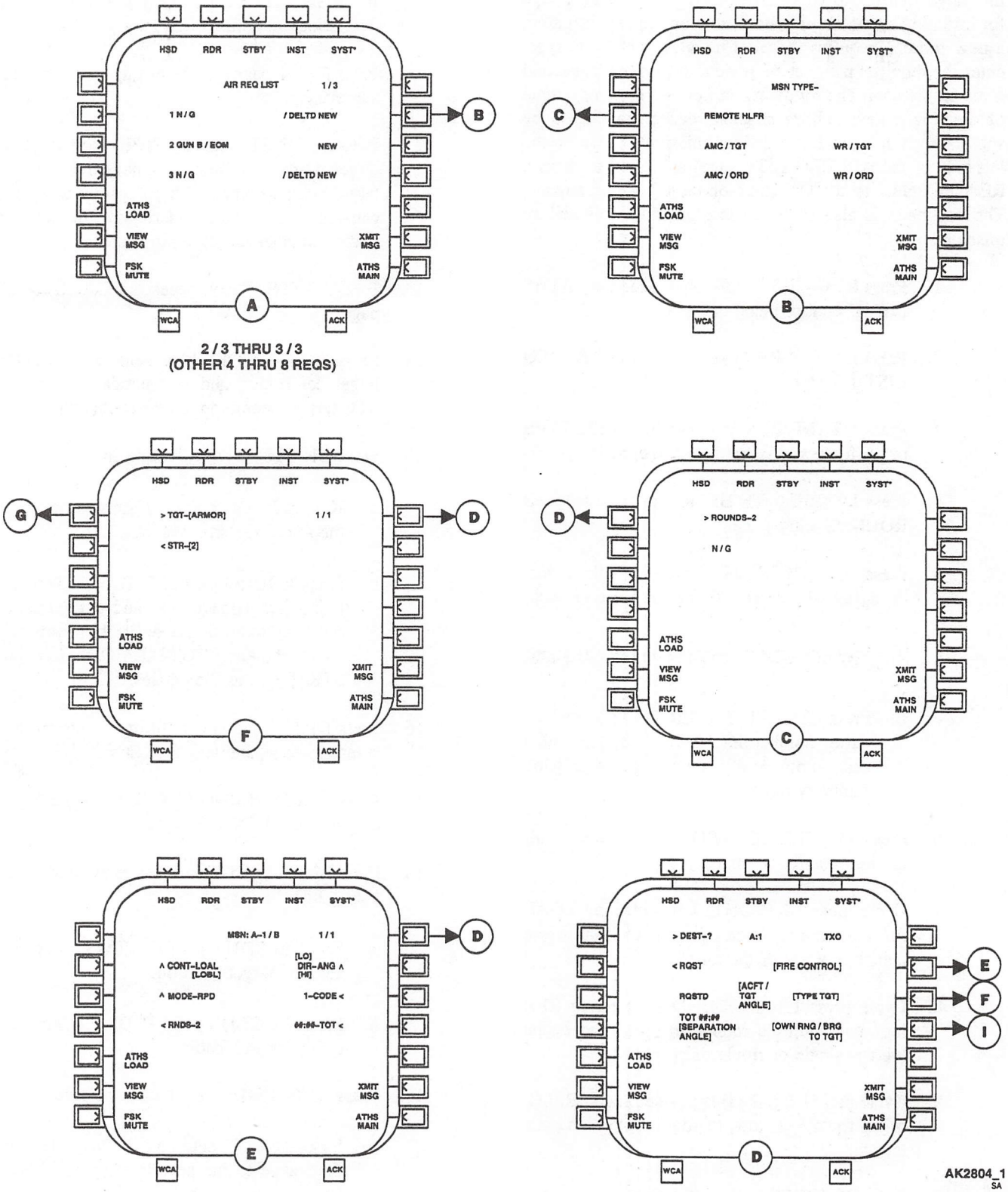

Figure 3-40. Air Request Page Flows (Sheet 1 of 3)

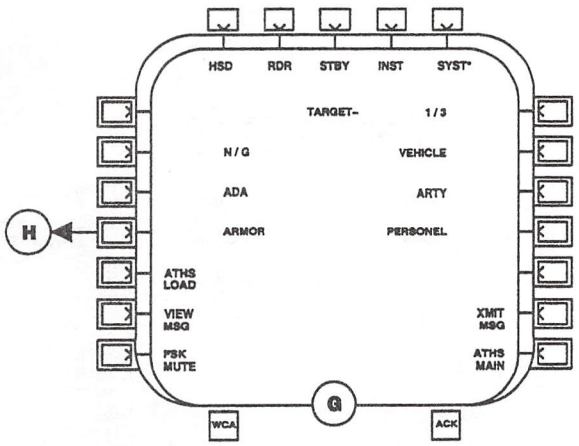

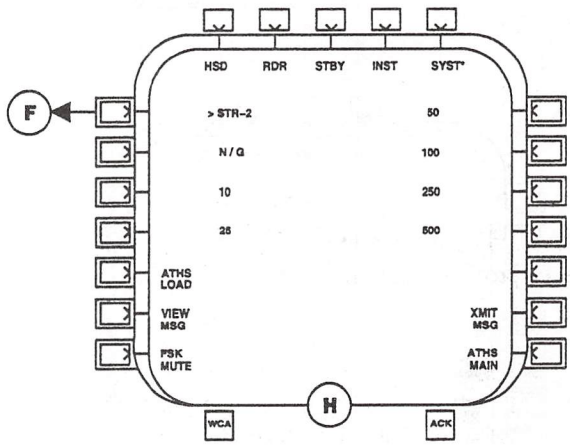

DESIGNATING ACFT AFTER RECIEVING READY

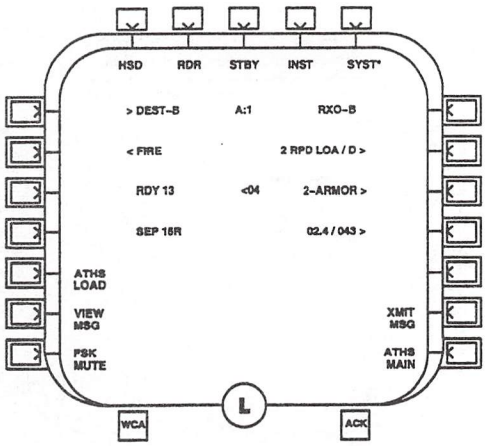

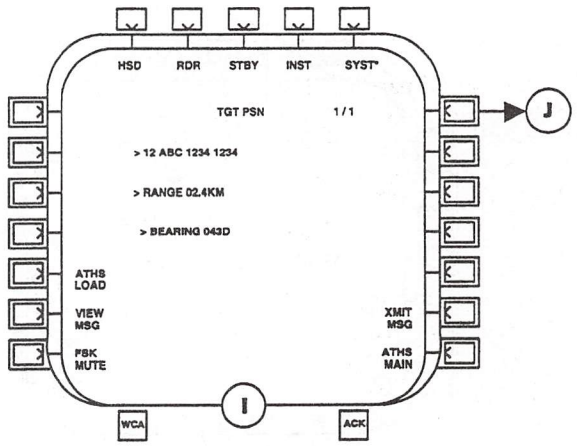

DESIGNATING ACFT AFTER RECIEVING ACCEPT

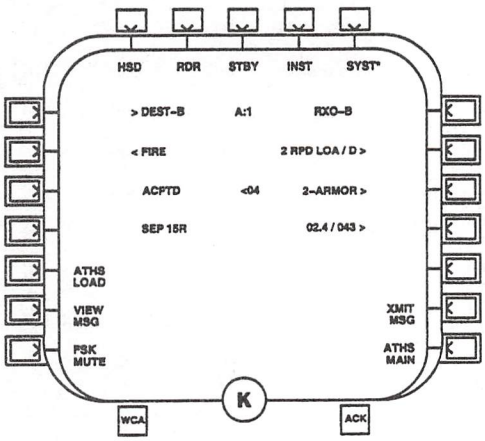

DESIGNATING ACFT PRIOR TO TRANSMITTING

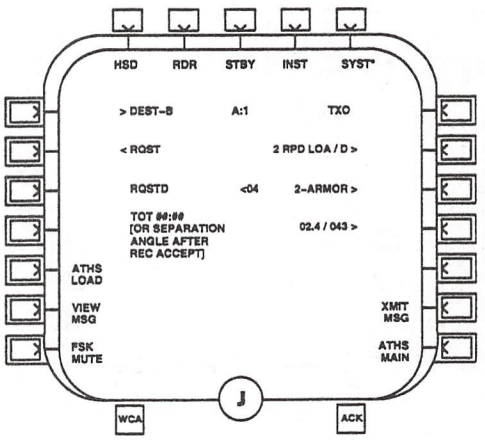

AK2804_2
SA

Figure 3-40. Air Request Page Flows (Sheet 2 of 3)

REVIEW/CHANGE DEFINED HELLFIRE MSN TO TIME-ON-TARGET (TOT)

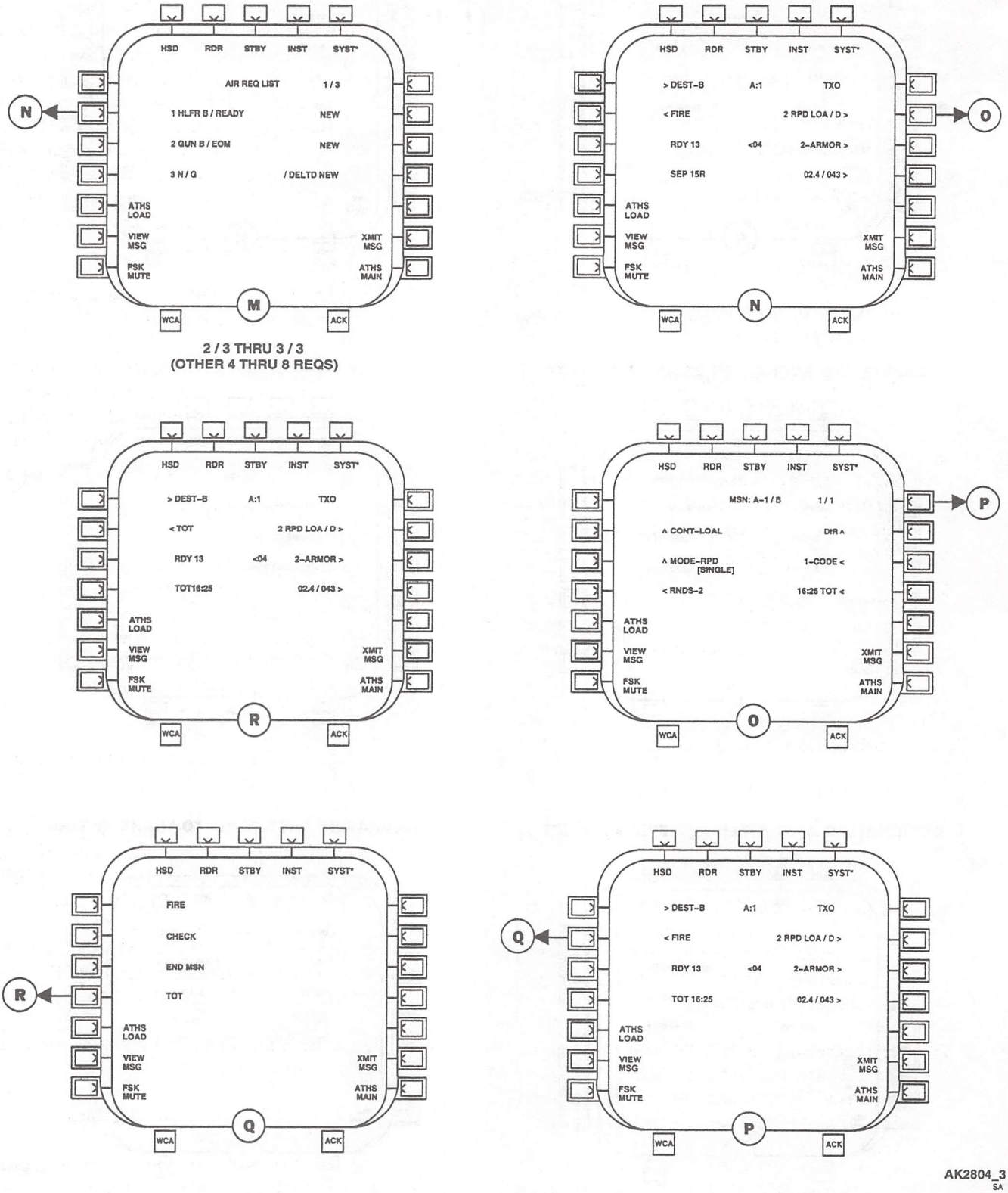

Figure 3-40. Air Request Page Flows (Sheet 3 of 3)

b. Press R1 CDU (ENTER DATA) key, entering laser designating distance to target.

20. Press L4 (BEARING) key, activating line.

a. Key into CDU entrypad the magnetic direction in degrees to the target.

b. Press R1 CDU (ENTER DATA) key, entering direction to target.

21. Press R1 1/1 page key, returning to air mission summary page.

22. Press L1 (DEST-?) key, activating line.

a. Key into CDU entrypad identifier of attack launching destination.

b. Press CDU R1 (ENTER DATA) key, entering identifier into DEST-?.

23. Verify the two defaults show RQST (L2) and RQSTD (L3) as the entries and that the aircraft to target angle is functional in the center of line three with a carat arrow indicating which way to move the aircraft to get on line.

24. Press R6 (XMIT MSG) key, transmitting the remote hellfire mission re to and receiving the ACK (R1) annunciation from the destination ATHS.

25. Upon receiving the ACCEPT message from the attack helicopter, verify:

a. L2 shows FIRE as the default.

b. L3 shows ACPTD signifying your mission has been accepted.

c. L4 shows SEP ??L or R indicating separation angle between the designator and launching locations in relation to the target along with a letter "L" or "R" indicating left or right of each other.

26. Upon receiving the READY message from the attack helicopter, verify: L3 shows RDY ?? as the ready mission status entry along with the time of flight expressed in seconds (e.g., RDY 13).

a. Pressing R6 (XMIT MSG) key transmits the command to fire, as shown by FIRE (L2) mission command entry, to and receives ACK (R1) from the attack aircraft.

b. Upon receiving SHOT message from the attack position, verify: L3 shows SHOT as the mission status entry. In this example, two missiles were requested and would have been fired in succession from the attack aircraft. If (L3) MODE-SINGLE was selected on the air mission control summary page, proceed with pressing R6 (XMIT MSG) key to transmit the second fire mission command request as indicated by (L2) FIRE entry.

c. Pressing L2 (FIRE) key, accesses the air observer mission command select page.

d. Pressing L3 (END MSN) key selects the mission command to end the mission and automatically returns to the air mission summary page, changing FIRE (L2) entry to show EOM (L2) command.

NOTE

If a tactical situation has arisen precluding the designator from sending the FIRE command immediately after receiving the READY mission status, the observer can elect to check fire the mission temporarily along with a subsequent time on target message.

27. Press L2 (FIRE) key, accessing the air observer mission command select page.

28. Press L2 (CHECK) key, selecting check fire mission command and automatically returning to air mission summary page, changing FIRE (L2) entry to show CHECK (L2) command.

29. Press R6 (XMIT MSG) key, transmitting check fire command to and receiving ACK (R1) from destination.

30. Press R2 (FIRE CONTROL) key, accessing air control summary page.

31. Press R4 (TOT) key, activating line.

a. Key into CDU entrypad the time in hours and minutes for the anticipated target engagement time on target.

b. Press R1 (ENTER DATA) key, entering the time on target into ##:##-TOT.

32. Press R1 1/1 page key, returning to the air mission summary page and showing that SEP ##L or R (L4) is replaced with TOT ##:## entry.

33. Press L2 (CHECK) key, accessing air observer mission command select page.

34. Press L4 (TOT) key, selecting time on target mission command and automatically returning to air mission summary page, showing that CHECK (L2) is replaced with TOT mission command entry.

35. Press R6 (XMIT MSG) key, transmitting the TOT mission command and the target engagement TOT ##:## to and receiving ACK (R1) from the attack helicopter. This transfers the fire control to the launching site.

36. Upon receiving the first SHOT message from the attack helicopter (as specified by the TOT), verify: L3 shows SHOT as the mission status entry. Start the time of flight (L3 RDY ## line entry) countdown.

37. Upon receiving the second SHOT message from the attack helicopter, verify: L3 shows SHOT. Begin counting down the time of flight (L3 RDY ## line entry).

38. Upon receiving the EOM message from the attack helicopter, verify: L3 shows EOM.

39. If attack helicopter (having had TOT fire control) does not send EOM and situation warrants mission termination:

    a. Press L2 (TOT) key, accessing air observer mission command select page.

    b. Press L3 (END MSN) key, selecting the mission command to end the mission and automatically returning to the air mission summary page, changing TOT (L2) entry to show EOM (L2) command.

    c. Press R6 (XMIT MSG) key, transmitting the EOM command to and receiving ACK (R1) from the attack helicopter.

40. Press R7 (ATHS MAIN) key, accessing ATHS MENU page.

41. Press L1 (AIR REQ) key, accessing AIR REQ LIST page.

42. Verify (L1) shows: [1 HLFR B/EOM] as the defined entry.

3-84. ATHS MOVEMENT Command/Report.

See Figure 3-41 (MOVEMENT Command/Report Page Flows) for setting up and transmitting movement commands/reports including presets.

1. Press R7 (ATHS MAIN) key, accessing ATHS MENU control page.

2. Press L3 (MOVEMENT) key, accessing MOVEMENT selection page.

3. Press L2 (MOVE TO) key, L3 (HOLD AT) key, L4 (RDZV AT) key, R2 (MOVING TO) key, or R3 (HLDG AT) key, selecting type of movement command/report and automatically accessing a movement destination selection page, titled as selected.

4. Press L2 (PRESET) key, L3 (MY POSITION) key, or L4 (OTHER) key, accessing movement preset 1/2 page (by L2 key actuation) or the movement summary page (by either L3 or L4 key actuation).

    a. Pressing L3 (MY POSITION) automatically accesses and enters your present position onto the movement summary transmitting page. Proceed to step 6.

    b. Pressing L4 (OTHER) key, automatically accesses the movement summary page where a free text message can be inserted prior to transmitting. Proceed to step 6.

5. Pressing L2, L3, or L4 movement type preset message key accesses movement summary page or pressing R1 1/2 page key accesses 2/2 page for selecting L2, L3, or L4 movement type preset message key, accessing movement summary page.

NOTE

On pages 1/2 and 2/2, the R2 (^), R3 (^), and R4 (^) keys allow reviewing the entire preset messages before going to the movement summary page for transmitting.

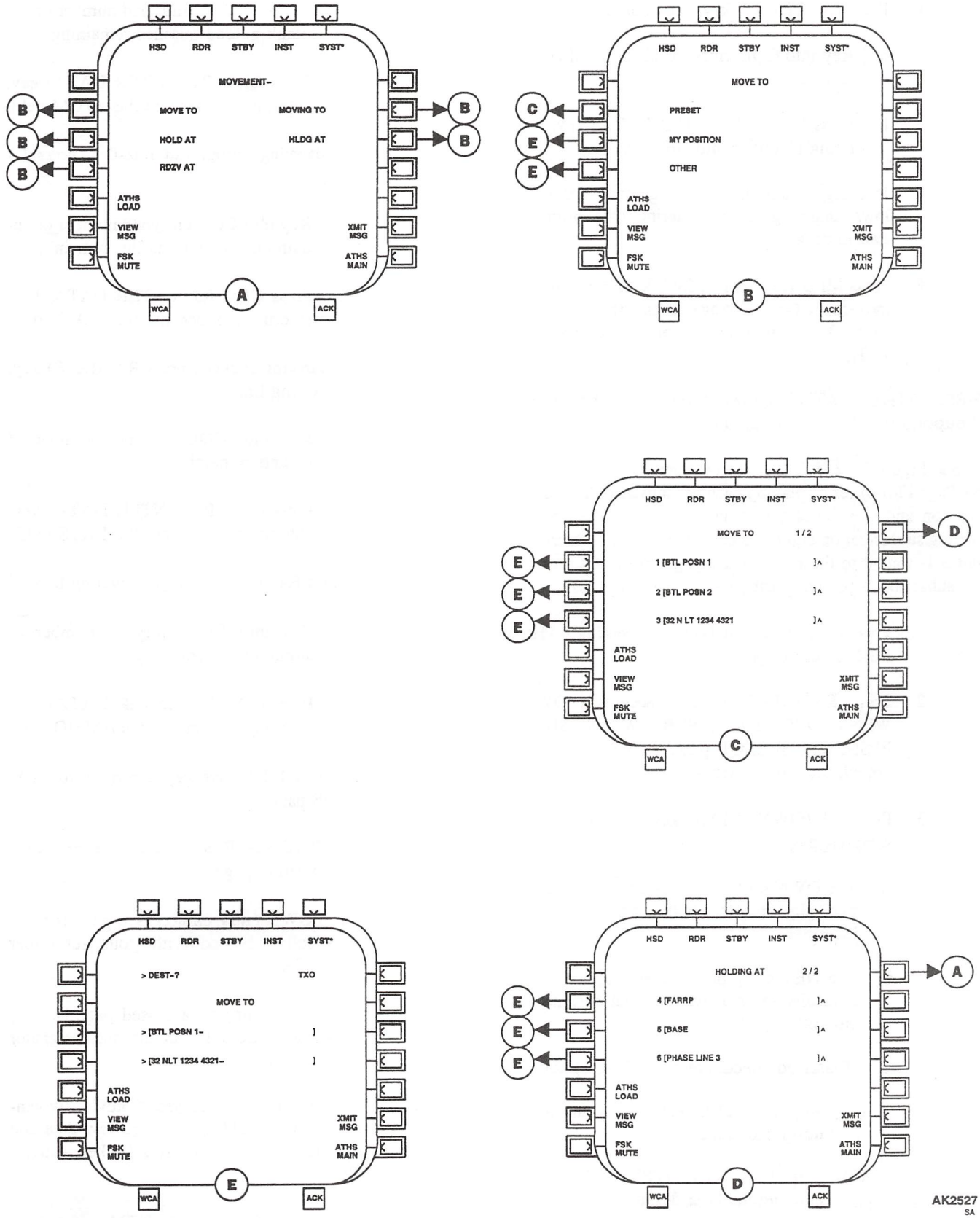

Figure 3-41. MOVEMENT Command/Report Page Flows

6. Press L1 (DEST-?) key, activating line.

   a. Key into CDU entrypad identifier of destination.

   b. Press CDU R1 (ENTER DATA) key, entering identifier into DEST-?.

7. Pressing L3 and/or L4 message entry fields allows changing and/or entering data prior to transmitting.

8. Press MFD R6 (XMIT MSG) key, transmitting movement type message to and receiving the ACK (R1) annunciation from the destination ATHS.

3-85. ATHS STATUS of Own and Other Subscribers Weapons and Present Position.

See Figure 3-42 (STATUS of Own and Other Subscribers Page Flows) for displaying each net subscriber's present position and weapon stores status. The status of each reporting subscriber on eight nets can be reviewed. Subscriber status is routed to the received message index and sent to the subscriber's present position and weapons pages.

1. Press R7 (ATHS MAIN) key, accessing ATHS MENU control page.

2. Press R3 (STATUS) key, accessing OWN WPNS, OWN PPSN, SUBS WPNS, SUBS PPSN, and SELECT page. If aircraft is unarmed, proceed to step 4.

3. Press L1 (OWN WPNS) key, accessing own weapons page.

   a. The OWN entry on accessed page is automatically inserted with your subscriber identifier.

   b. The NET entry on accessed page is automatically inserted with the net designator currently in effect.

   c. If laser equipped, press L2 (CODE) key.

      (1) Key into CDU entrypad your laser designator code.

      (2) Press CDU R1 (ENTER DATA) key, entering the laser designator code.

   d. If carrying antitank missiles, press L3 key.

      (1) Key into CDU entrypad number of antitank guided missiles remaining.

      (2) Press CDU R1 (ENTER DATA) key, entering number into the ATGM field.

   e. If carrying antiaircraft missiles, press L4 key.

      (1) Key into CDU entrypad number of antiaircraft guided missiles remaining.

      (2) Press CDU R1 (ENTER DATA) key, entering number into the A/A field.

   f. If carrying rockets, press R3 (RKTS) key, activating line.

      (1) Key into CDU entrypad number of rockets remaining.

      (2) Press CDU R1 (ENTER DATA) key, entering number into the RKTS field.

   g. Press R4 (AMMO) key, activating line.

      (1) Key into CDU entrypad number of ammunition remaining.

      (2) Press CDU R1 (ENTER DATA) key, entering number into the AMMO field.

   h. Press R1 1/1 page key, returning to STATUS page.

4. Press L2 (OWN PPSN) key, accessing own present position page.

   a. The OWN entry on accessed page is automatically inserted with your subscriber identifier.

   b. The NET entry on accessed page is automatically inserted with the net designator currently in effect.

5. L2 (UTM) entry is displayed if previously generated by other ATHS pages; review data and change as required by pressing L2 key, activating line.

   a. Key into CDU entrypad UTM grid coordinate data.

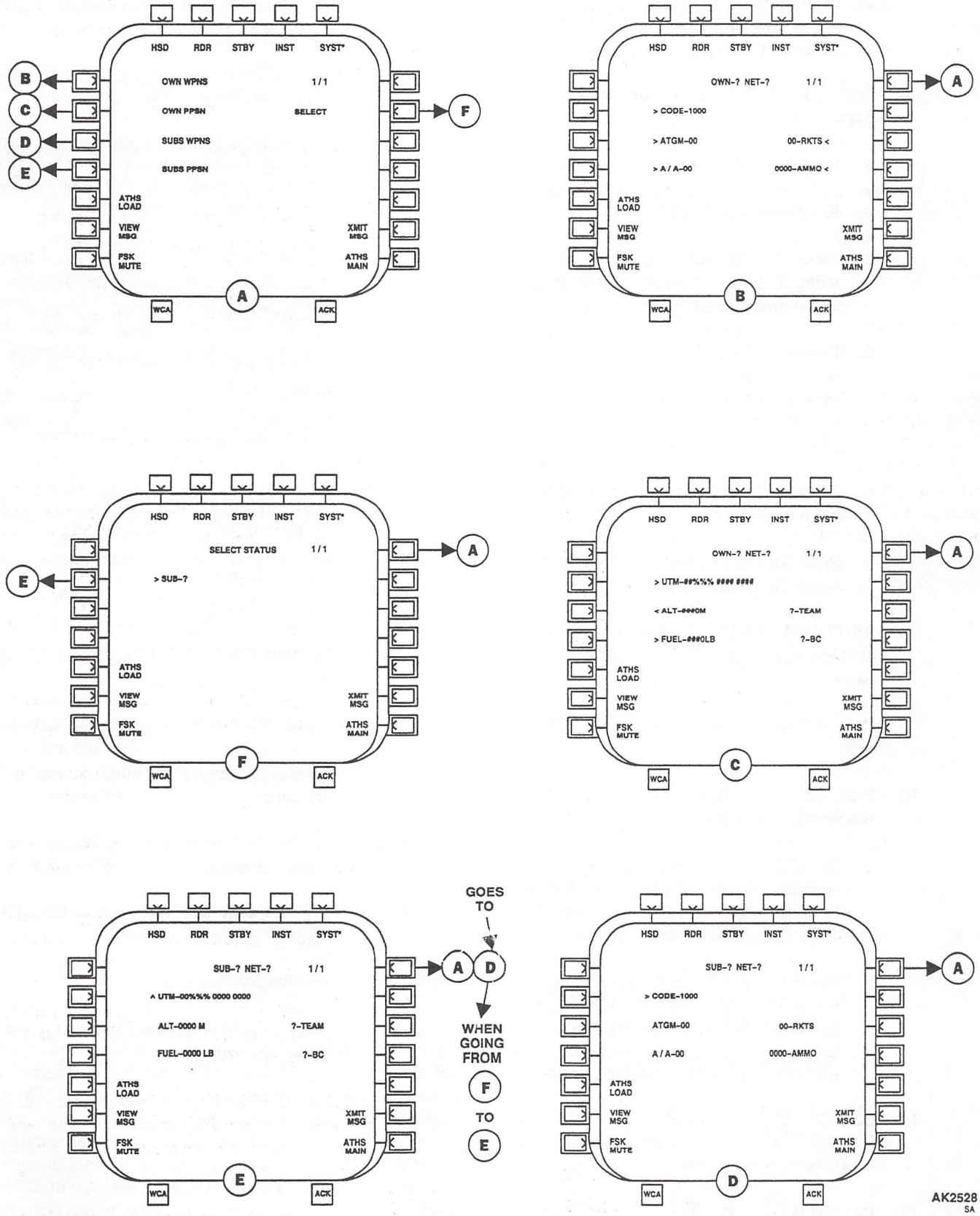

Figure 3-42. STATUS of Own and Other Subscriber Page Flows

b. Press CDU R1 (ENTER DATA) key, entering grid coordinate data into the UTM field.

6. Press L3 (ALT) key, accessing altitude entry page.

a. Press L1 (ALT) key, activating line.

b. Key into CDU entrypad altitude in meters.

c. Press CDU R1 (ENTER DATA) key, entering altitude and automatically returning to the own present position page.

d. Pressing L3 (N/G) key selects altitude as not given and automatically returns to the own present position page.

7. Press L4 (FUEL) key, activating line.

a. Key into CDU entrypad the number of fuel in pounds.

b. Press CDU R1 (ENTER DATA) key, entering the pounds into the FUEL field.

8. R3 (TEAM) and R4 (BC) keys are automatically entered, previously generated by START pages.

9. Press R1 1/1 page key, returning to STATUS page.

10. Press L3 (SUBS WPNS) key, accessing subscriber weapons page.

a. The SUB entry on accessed page is automatically inserted with the subscriber identifier on page one and will progressively cycle as each subscriber is reviewed.

b. The NET entry on accessed page is automatically inserted with the net designator this subscriber belongs to or is operating in and will change accordingly as each subscriber is reviewed on subsequent pages.

11. L2 (CODE), L3 (ATGM), L4 (A/A), R3 (RKTS), and R4 (AMMO) entries show each subscriber's weapon status.

12. Pressing R1 key, scrolling one through multiple pages, accesses all the subscribers and pressing the last subscriber's R1 key will return to the STATUS page.

13. Press L4 (SUBS PPSN) key, accessing subscriber present position page.

a. The SUB entry on accessed page is automatically inserted with the subscriber identifier on page one and will progressively cycle as each subscriber is reviewed.

b. The NET entry on accessed page is automatically inserted with the net designator this subscriber belongs to or is operating in and will change accordingly as each subscriber is reviewed on subsequent pages.

14. L2 (UTM), L3 (ALT), L4 (FUEL), R3 (TEAM), and R4 (BC) entries show each subscriber's present position status.

15. Press R2 (SELECT) key, accessing the SELECT STATUS page. This choice allows going directly to a subscriber without having to cycle through the pages to acquire status information.

16. Press L1 (SUB) key, activating line.

a. Key into CDU entrypad subscriber identifier.

b. Press CDU R1 (ENTER DATA) key, entering identifier into SUB-? field and automatically bringing up that subscriber's present position page for reviewing status.

17. Press R1 1/1 page key, accessing this subscriber's weapons page for reviewing status.

18. Press R1 1/1 page key, returning to the STATUS page.

3-86. ATHS Received Messages.

See Figure 3-43 (RCVD MSGS Page Flows) for accessing up to 12 received messages that can be reviewed and deleted as required. When an ATHS message is received, it is stored in the received message queue and a RCVD MSG PENDING annunciation is displayed at the bottom right annunciator line areas of the MFD. Messages received while the receive message queue is full are not accepted and the RCVD MSG PENDING annunciation will not be displayed on the MFD. When a message is received and stored, the ATHS automatically transmits ACK annuncia-

tor, acknowledging message received, to the sending subscriber. Messages received that are not recognizable, improperly addressed (net data incorrect), or unprocessible are ignored. Acceptable messages received, but are from an originator not defined into the subscriber net, are stored. The RCVD MSG PENDING annunciation is displayed, but the ACK annunciator is not transmitted to the originator. The RCVD MSGS page displays the message number, originator address, a three character identifier for message type, space for showing a six character portion of the message content, and message status.

1. Press R7 (ATHS MAIN) key, accessing ATHS MENU control page.
2. Press R1 (RCVD MSGS) key, accessing RCVD MSGS selection 1/4 page. The number of messages are reverse ordered with the latest (highest numbered) being shown on page one (1/4).
3. Press L2, L3, or L4 key, accessing type message (e.g., SPOT, FREE TEXT, or MOVE TO, etc.) for review.
4. Press R7 (ATHS MAIN) key, accessing ATHS MAIN menu page.
5. Press R1 (RCVD MSGS) key, returning to the RCVD MSGS page.
6. Press R1 1/4 page key, accessing RCVD MSGS 2/4 page for earlier message(s) access.
7. Press L2, L3, or L4 key, accessing type message (e.g., SPOT, FREE TEXT, or MOVE TO, etc.) for review as well as L6 (VIEW MSG).
8. Repeat steps 6 through 7 for reviewing the remaining 3/4 and/or 4/4 page(s).

3-87. ATHS Free Text, Message Presets, Check All, Mayday, and Authentication Message.

See Figure 3-44 (Messages/Free Text Page Flows) for setting up free text, message presets, check all, Mayday, and authentication (receive and transmit) line messages for transmitting. The preset messages are selected from the preset messages inputted on the start pages. The check all message is transmitted as a directive to cease fire. The free text message is two lines of free text information. The Mayday message is a present position transmission to the broadcast (BC) net.

1. Press R7 (ATHS MAIN) key, accessing ATHS MENU control page.
2. Press R4 (MSGS/FTXT) key, accessing MESSAGE TYPE selection page.
   a. Press L2 (FREE TEXT) key, L3 (MSG PRESETS) key, L4 (CHECK ALL) key, R2 (MAYDAY) key, or R3 (AUTH) key, accessing the desired message type page.
   b. Pressing L2 (FREE TEXT) key accesses the FREE TEXT page.
      (1) Press L1 (DEST) key, activating line.
         (a) Key into CDU entrypad identifier of destination.
         (b) Press CDU R1 (ENTER DATA) key, entering identifier into DEST-?.
      (2) Cycle press L2 (FREE TEXT) key, selecting DATA or TEST.

NOTE

The TEST selection is used to transmit any 36 character free text test message and specifying it is not part of the mission flow; so that, the ATHS does not treat this message as valid in the system.

      (3) Press L3 (entry bracket) key, activating line.
         (a) Key into CDU entrypad a free text message up to 36 characters.
         (b) Press CDU R1 (ENTER DATA) key, entering the message into the two lines of 18 spaces per line capacity.
      (4) Press R6 (XMIT MSG) key, transmitting FREE TEXT data to and receiving the ACK (R1) annunciation from the destination ATHS.
3. Pressing R7 (ATHS MAIN) key accesses ATHS MENU control page.

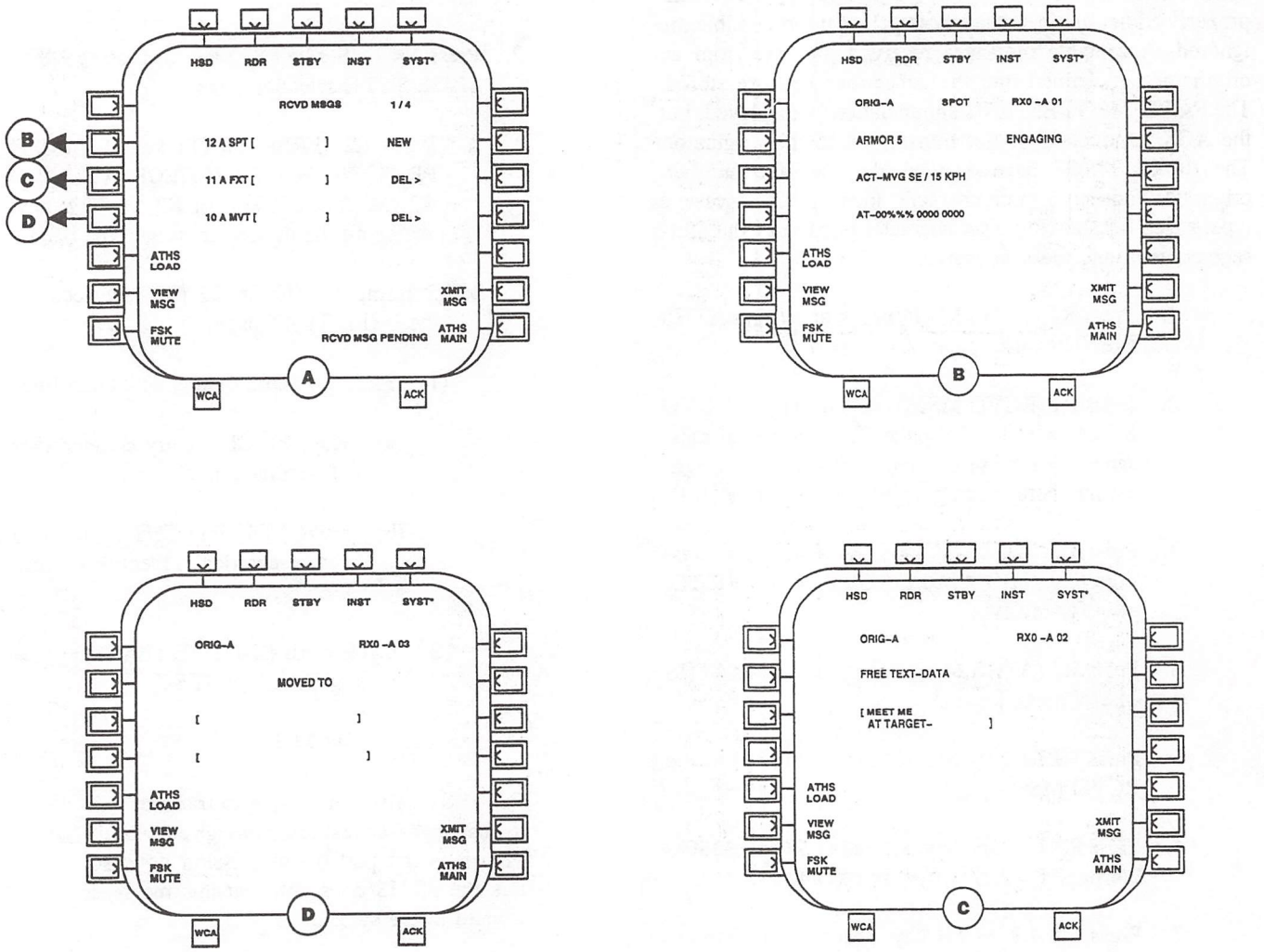

AK2529
SA

Figure 3-43. RCVD MSGS Page Flows

a. Pressing R4 (MSGS/FTXT) key accesses MESSAGE TYPE selection page.

b. Pressing L3 (MSG PRESETS) key accesses MSG PRESETS 1/2 page, containing first through third message.

(1) Pressing R1 1/2 page key accesses MSG PRESETS 2/2 page, containing fourth through sixth message.

NOTE

Only the first 15 characters of message appear in the entry line. Pressing an opposite key on the right allows viewing the entire message on that line.

(2) Press L2, L3, or L4 key on either page, accessing a MSG PRESET 1 through 6 summary page.

(3) Press L1 (DEST) key, activating line.

(a) Key into CDU entrypad identifier of destination.

(b) Press CDU R1 (ENTER DATA) key, entering identifier into DEST-?.

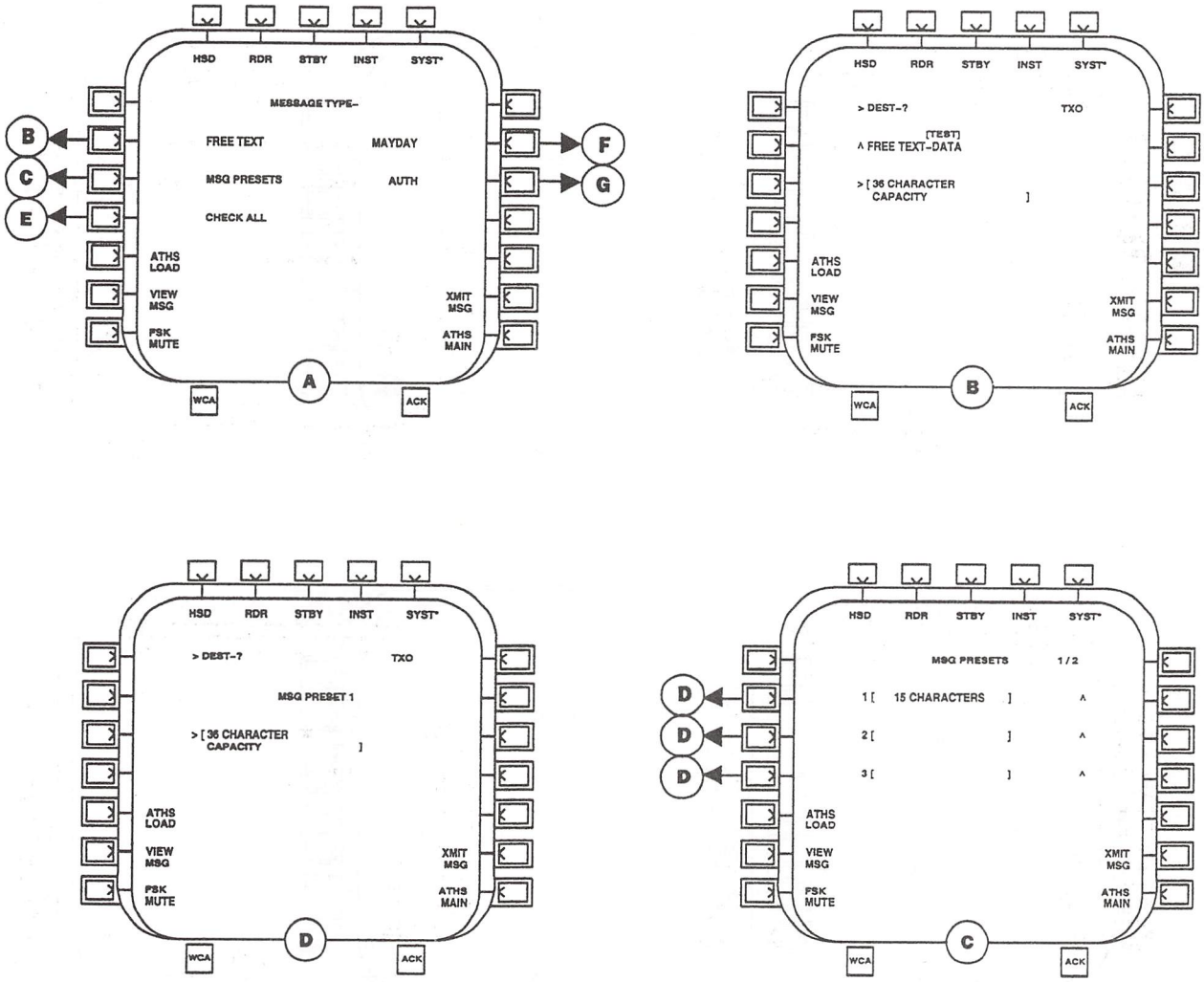

AK2530_1
SA

Figure 3-44. Message/Free Text Page Flows (Sheet 1 of 2)

(4) Press R6 (XMIT MSG) key, transmitting a MSG PRESET 1 through 6 message to and receiving the ACK (R1) annunciation from the destination ATHS.

4. Pressing R7 (ATHS MAIN) key accesses ATHS MENU control page.

   a. Pressing R4 (MSGS/FTXT) key accesses MESSAGE TYPE selection page.

   b. Pressing L4 (CHECK ALL) key accesses the CHECK ALL summary page.

(1) L1 (DEST) entry has the broadcast (BC) identifier automatically inserted. To change:

(a) Press L1 (DEST) key, activating line.

(b) Key into CDU entrypad new identifier of destination.

(c) Press CDU R1 (ENTER DATA) key, entering new identifier into DEST-?.

(2) Press R6 (XMIT MSG) key, transmitting the CHCK ALL directive for

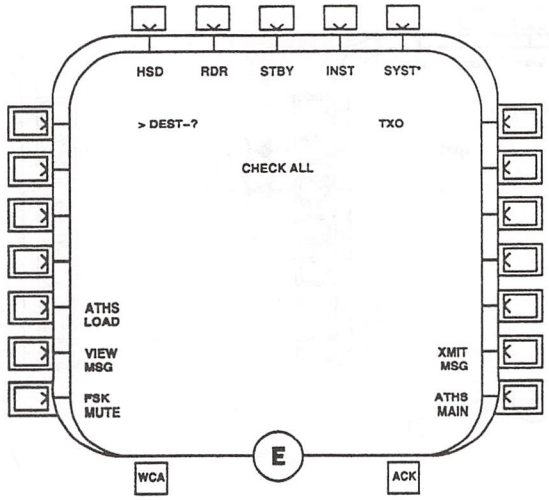

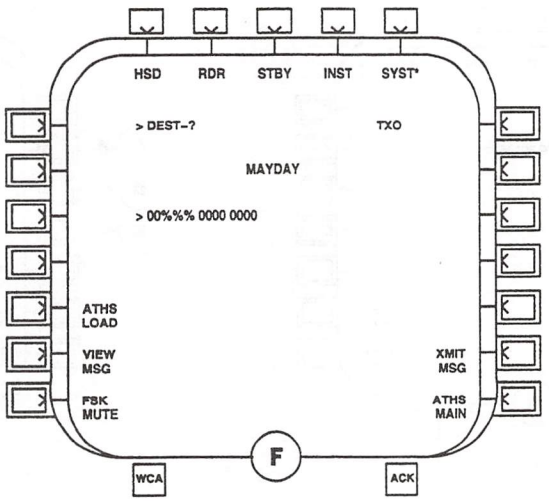

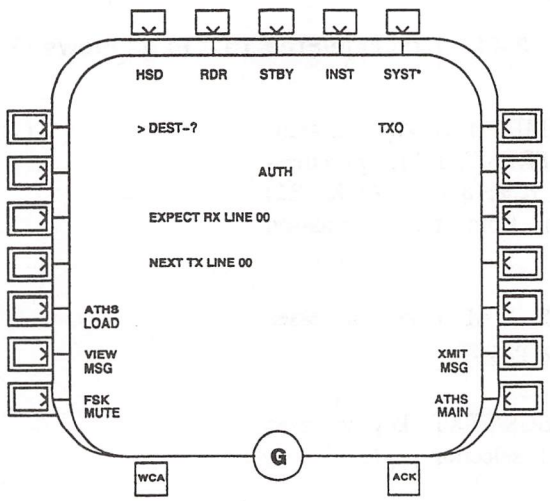

AK2530_2
SA

Figure 3-44. Message/Free Text Page Flows (Sheet 2 of 2)

cease fire to and receiving the ACK (R1) annunciation from the destination ATHS.

5. Pressing R7 (ATHS MAIN) key accesses ATHS MENU control page.

   a. Pressing R4 (MSGS/FTXT) key accesses MESSAGE TYPE selection page.

   b. Pressing R2 (MAYDAY) key accesses the MAYDAY summary page.

      (1) L1 (DEST) entry has the broadcast (BC) identifier automatically inserted. To change:

         (a) Press L1 (DEST) key, activating line.

         (b) Key into CDU entrypad new identifier of destination.

         (c) Press CDU R1 (ENTER DATA) key, entering new identifier into DEST-?.

      (2) L3 UTM grid entry has your preset grid coordinates automatically inserted. To change:

         (a) Press L3 UTM grid entry key, activating line.

         (b) Key into CDU entrypad new grid coordinates of your location.

         (c) Press CDU R1 (ENTER DATA) key, entering new present position into L3 entry line.

      (3) Press R6 (XMIT MSG) key, transmitting the MAYDAY emergency alert to and receiving the ACK (R1) annunciation from the destination ATHS.

6. Pressing R7 (ATHS MAIN) key accesses ATHS MENU control page.

   a. Pressing R4 (MSGS/FTXT) key accesses MESSAGE TYPE selection page.

   b. Pressing R3 (AUTH) key accesses the page used for automatic authentication synchronization, for example, between TACFIRE and ATHS tables.

      (1) L1 (DEST) entry has the identifier with whom you are in automatic authentication (e.g., TACFIRE) automatically inserted. To change:

         (a) Press L1 (DEST) key, activating line.

         (b) Key into CDU entrypad new identifier of destination.

         (c) Press CDU R1 (ENTER DATA) key, entering new identifier into DEST-?.

      (2) L3 (EXPECT RX LINE ##) entry tells TACFIRE which receive table line you are expecting to receive.

      (3) L4 (NEXT TX LINE ##) entry tells TACFIRE which transmit table you will send next.

NOTE

If tables are out of synchronization, a NAK (not acknowledged) annunciation will be returned instead of ACK. Wait prior to retransmitting. TACFIRE got the message and is changing their table position. TACFIRE should call you back with tables in synchronization.

      (4) Press R6 (XMIT MSG) key, transmitting the automatic authentication synchronization data to and receiving the ACK (R1) annunciation from the destination ATHS.

3-88. Emergency Zeroizing/Erasing of the Communications Plan, Flight Plan, and/or NRPs.

The ZEROIZE EMERGENCY panel on the lower console zeroizing/erasing sensitive mission information. There are two switches on the ZEROIZE EMERGENCY panel, one switch allows the pilots to zeroize/erase only the communication and navigation equipment and the other switch allow zeroizing of the mission processor memories, communication and navigation equipment, encoding/decoding equipment, and DTM. Data erased using the ZEROIZE EMERGENCY panel cannot be restored. The CDU ZRO key allows erasing of communication and navigation data from processor memory; however, this data can be restored.

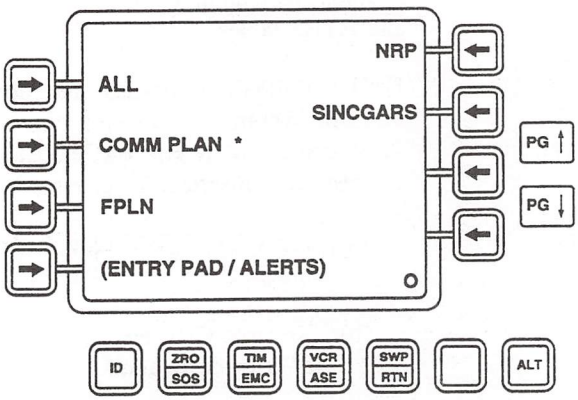

Figure 3-45. CDU Zeroize Page

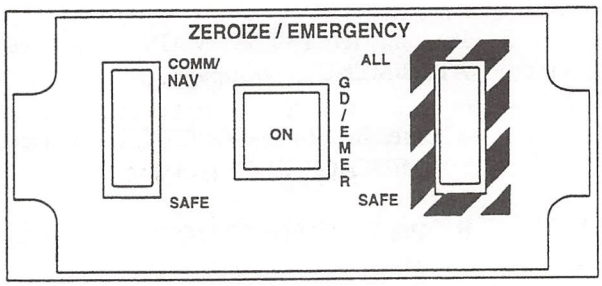

Figure 3-46. ZEROIZE/EMERGENCY panel

a. CDU ZRO Page. The CDU ZRO key provides direct access to the CDU zeroize page (Figure 3-45). The controls on this page allow erasing part or all sensitive communication and navigation data from the processor memory to include the flight plan, communication plan, and/or NRP table. However, the data on the DTM is untouched and can be reloaded if required. The following functions are available on the CDU zeroize page:

KEY/LEGEND	FUNCTION
	CAUTION
	Do not activate ALL key function while inflight.
	CDU Page
L1 (ALL)	Press twice to erase the communications plan, flight plan, and the NRP tables simultaneously (asterisk will appear while erasing data).
L2 (COMM PLAN)	Press twice to erase the communications plan (asterisk will appear while erasing data).
L3 (FPLN)	Press twice to erase the flight plan (asterisk will appear while erasing data).
L4 (Entrypad/Alerts)	Standard CDU default pages line key. Refer to paragraph 3-45, CDU Default Pages, for more details.

KEY/LEGEND	FUNCTION
R1 (NRP)	Press twice to erase the NRP table only (asterisk will appear while erasing data).
R2 (SINC GARS)	Press twice to erase SINCGARS frequencies and hopsets (asterisk will appear while erasing data).
R3 thru R4	Not used.

b. ZEROIZE/EMERGENCY Panel. The ZEROIZE/EMERGENCY panel can be used to erase mission processor memories, encoding/decoding equipment, radios, navigation equipment, and DTM of the communications plan, flight plan, and NRPs (Figure 3-46). When the controls on this panel erase data to include the DTM, it cannot be restored. New data has to be entered or a new DTM has to be inserted and loaded. In addition to the zeroize and erase functions, the ZEROIZE/EMERGENCY panel will activate the emergency frequencies for the VHF and UHF when the ON switch is pressed. Power to the ZEROIZE/EMERGENCY panel is provided by the battery utility bus through circuit breakers marked ZEROIZE PNL NO.1 and NO.2 on the lower console.

CONTROL	FUNCTION
Communication/ Navigation switch	
COMM/NAV	Erase communication and navigation data from the mission processor memory, radios, navigation equipment, and DTM.
SAFE	Normal position.
	CAUTION
	Do not activate ALL switch function while inflight.
All switch	
ALL	Erases all communications, navigation, NRPs, and secure data/codes from the mission processor, encoding/decoding equipment, and DTM. (ALL switch must be held for 10 seconds to activate zeroize, this feature prevents inadvertent zeroizing caused by accidental key activation or software signal spikes.
SAFE	Normal position.
GD/EMER (ON) switch	Sets VHF to 121.50 MHz, squelch off, and clear; UHF to 243.00 MHz, squelch off, and clear; ON pushbutton will illuminate when on. If any radio is selected while the GD/ EMERG switch is on, the respective radio fail advisory message will be display on the MFD.

3-89. Zeroize/Erase Normal Operation.

a. CDU Erase Operation. Data will be removed from the mission processor memory and encoding/decoding equipment, but can be recovered from DTM.

(1) CDU ZRO key - Press.

(2) Erase function L1 (ALL), L2 (COMM PLAN), L3 (FPLN), or R1 (NRP) key - Press.

b. ZEROIZE/EMERGENCY Panel Operation. Data will be erased from memory and DTM.

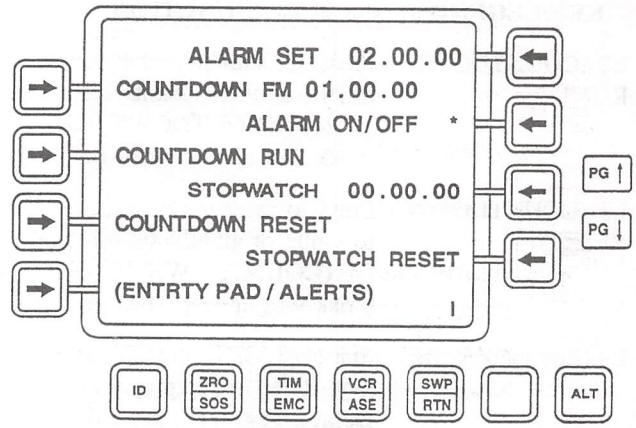

Figure 3-47. CDU Timer Page

NOTE

These switches are used during emergency operations only. Switch selection will depend upon the nature of the emergency.

(1) Safety latch for desired function - Raise.

(2) Place the respective switch at the COMM/NAV or ALL position for at least 10 seconds.

c. To activate the emergency transmit frequencies for the VHF and UHF radios, press the ZEROIZE/ EMERGENCY panel ON switch.

3-90. CDU Timer Page and Functions.

The countdown timer provides a stopwatch and alarm capability for the pilots. The CDU TIM page controls the stopwatch, countdown, and alarm functions (Figure 3-47). When the alarm clock or countdown functions are activated, an asterisk will be displayed on their respective data lines. The countdown timer will support countdown times up to 23 hours, 59 minutes, and 59 seconds.

KEY/LEGEND	FUNCTION
L1 (COUNTDOWN FM)	Press to enter the length of time from the entrypad for the countdown alarm. Time is entered in hours, minutes, and seconds using decimal points as a separator and in the order listed. Entrypad data range: 00.00.00 to 23.59.59.

KEY/LEGEND	FUNCTION
L2 (COUNTDOWN RUN)	Press to start/stop the countdown timer for the value entry adjacent to L1 key (COUNTDOWN RUN*, asterisk will appear when running).
L3 (COUNTDOWN RESET)	Press to reset the countdown timer to value originally set on data line L1 (COUNTDOWN RESET*, asterisk will appear when pressed).
L4 (Entrypad/Alerts)	Standard CDU default pages line key. Refer to paragraph 3-45, CDU Default Pages, for more details.
R1 (ALARM SET)	Press to enter the alarm time from the entrypad for the alarm to sound. Enter time in hours, minutes, and seconds using decimal points as a separator and in the order listed. Entrypad data range: 00.00.00 to 23.59.59.
R2 (ALARM ON/ OFF)	Press to turn alarm clock on/off (ALARM ON/OFF, an asterisk will appear when on).
R3 (STOPWATCH)	Press to start/stop the CDU stopwatch. Display is in hours, minutes, and seconds and in that order. Display range: 00.00.00 to 23.59.59.
R4 (STOPWATCH RESET)	Press to reset the stopwatch to zero (00.00.00).

3-91. Timer Normal Operation.

1. Press CDU ALT key, then press TIM/EMC key.
2. Enter COUNTDOWN FM value into entrypad, then press L1 (COUNTDOWN FM) key.
3. As required - Enter ALARM SET time into entrypad, then press R1 (ALARM SET) key.
4. As required - Enter STOPWATCH values into entrypad, then press R3 (STOPWATCH) key to start or stop and display the stopwatch.

Section III NAVIGATION

3-92. General.

The IASS provides control, integration, and display of the helicopter navigation system. Navigation information is provided by three means: positioning systems, radio navigation aids (NAVAIDS), and computer generated data provided by the mission processor which will be referred to as flight director data. Doppler inputs provide velocity information when selected for use with a primary system. Radio NAVAIDS systems provide heading/course and course deviation information and are primarily provided by the automatic directional finder (ADF), VHF omnirange/ instrument landing system (VOR/ILS), TACAN, radar beacon transponder, FM-homing system, and personnel locator system (PLS). Some of the direction/steering systems also provide distance information. Flight director information is provided by the mission processor and is derived from computer calculations based upon the coordinates data of the current navigation positioning system in use. Flight director information assimilates data provided by a NAVAID; however, heading/course deviation cues are generated by the computer versus a NAVAID signal. In addition to the above primary systems, the multi-mode radar (MMR), forward looking infrared (FLIR), and map display systems provide limited positioning and steering information based on the coordinates' accuracy of the primary navigation system in use. Refer to Chapter 4 for information on the MMR, FLIR, and map display systems. The navigation system combined with barometric, Doppler velocity, and radar altitude data is integrated by the mission processor and provides the hybrid navigation solution of heading, velocity, and positioning data for display on the MFDs. The integrated navigation system also accepts manually entered position updates.

3-93. Positioning Systems.

Positioning systems provide coordinates data, primarily provided by the inertial navigation unit (INU), attitude and heading reference system (AHRS), global positioning system (GPS), air data system (ADS), and terrain reference navigation (TRN). The primary system in use provides the base data in which the mission processor calculates its flight director system information. The accuracy of sensor information in respect to coordinates only, is based on the accuracy of the primary positioning system in use. The coordinates data generated by a positioning system can be updated in several ways and are discussed later. Present position coordinates should be checked and/or updated periodically to maintain system integrity. Doppler inputs provide velocity information when selected for use with a primary system. The pilot determines which system will be used as the primary navigation source.

3-94. Automatic Regression/Progression Modes.

In the event one or more of the navigation systems becomes inoperative or degraded, the mission processor automatically selects the next available operating system(s) as defined by Figure 3-48. Under automatic progression, when no system has been manually selected, the system will progress to the highest available navigation system. The regression/progression path is determined by which system becomes inoperative and whether LAND/SEA is selected on the navigation display page. In addition to reverting automatically to an alternate navigation capability, any navigation mode can be manually selected. When a manual mode is selected, automatic progression will not go beyond the manually selected navigation system (identified by an asterisk) but the carat will progress to the highest available system. However, if the air data mode is manually selected when no other mode is available, the manual selection of the air data mode is superseded by automatic progression when a higher mode becomes available.

NOTE

Once a GPS automatic mode failure occurs and the pilot manually selects another mode, the GPS failure will never clear even if the fault that caused the failure no longer exists. If the pilots has manually selected a different mode after a GPS failure, if the failure is believed to be corrected, the pilot must manually reselect the failed mode to clear the GPS failure.

3-95. MFD and CDU Position Systems Control Pages.

The MFD and CDU control pages for the positioning systems contain key selections for multiple systems. The positioning system MFD and CDU pages describe the keys required to operate each system. The pilots should become very familiar with the information on these pages/ paragraphs to avoid returning repeatedly for reference. Subsequent paragraphs describing a navigation system will reference these MFD and CDU pages only, and no supporting artwork displayed within that system descriptive data. When an MFD page is accessed and displayed, the respective CDU will also appear.

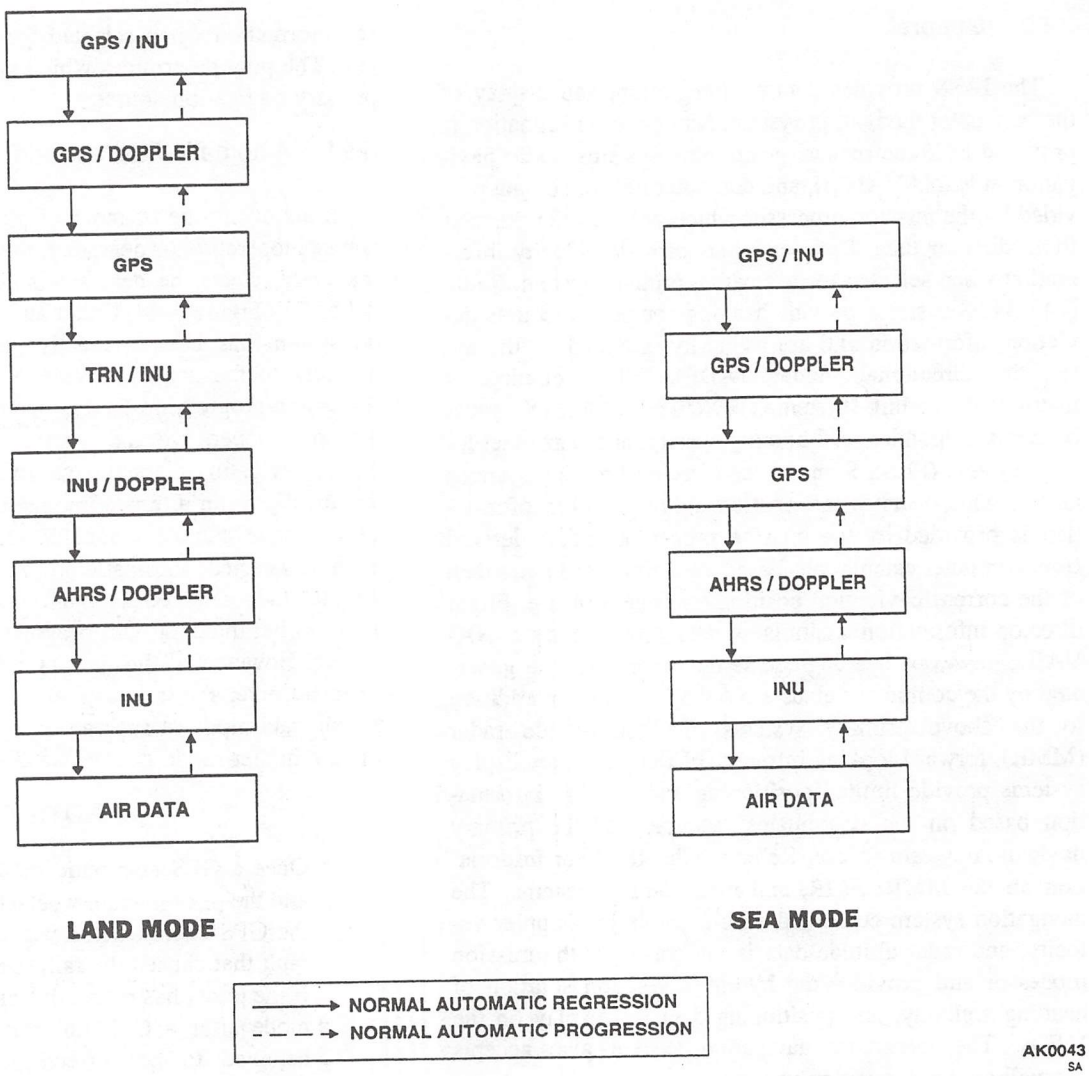

Figure 3-48. Navigation Hierarchy

3-96. System Control Pages.

Two system control pages provide primary access to the navigation system controls and pages (Figure 3-49). System control page 2 is used for maintenance functions and will not be described in this manual. System control page 1 allows access to all navigational system control pages, declutter configuration pages, NVG mode activation and deactivation, equipment status and test pages, checklist menu pages, aircraft status page, fuel and power management page, and DTM loading. The following functions are available on the system control page (Figure 3-50):

KEY/LEGEND	FUNCTION
	MFD Page 1
L1 (DCLT CONFIG)	Press to access the declutter control page.
L2 (NVG MODE)	Press to activate night vision goggle mode for the MFDs (NVG MODE*, asterisk will appear when NVG mode is in use).

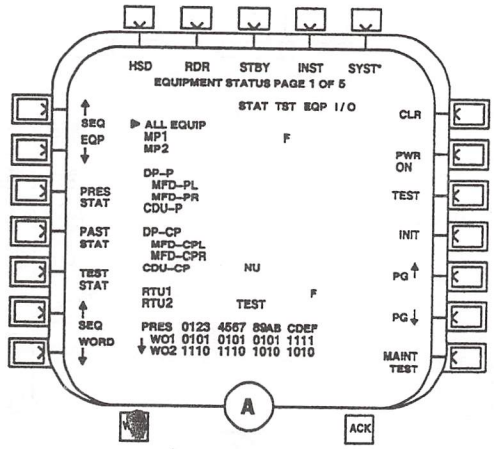

EQUIPMENT STATUS PAGE

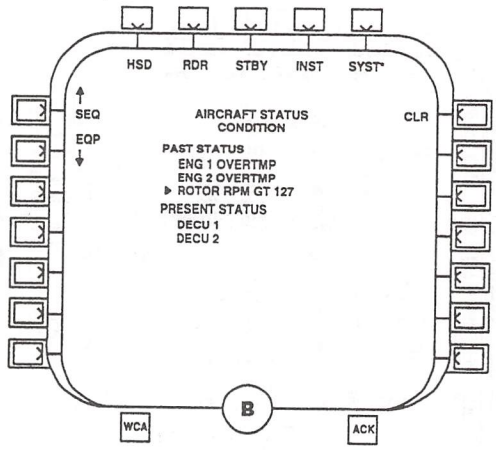

AIRCRAFT STATUS PAGE

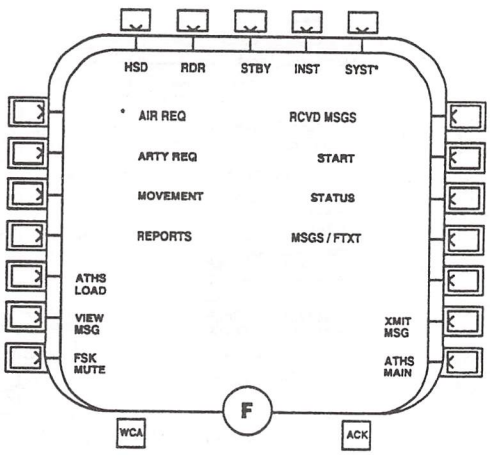

ATHS MENU PAGE

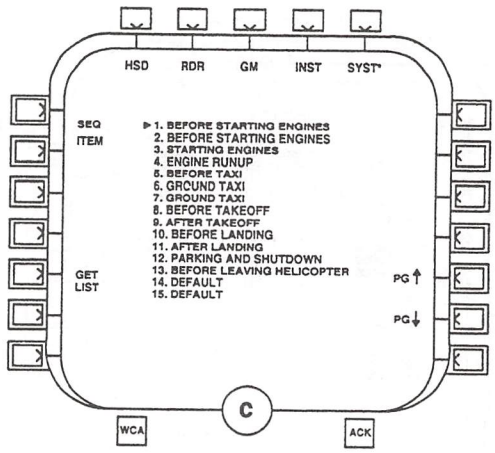

CHECKLIST MENU PAGE

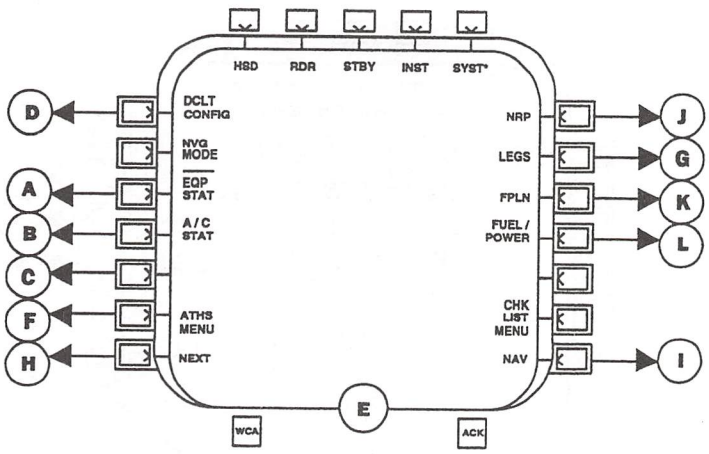

SYSTEM CONTROL PAGE 1

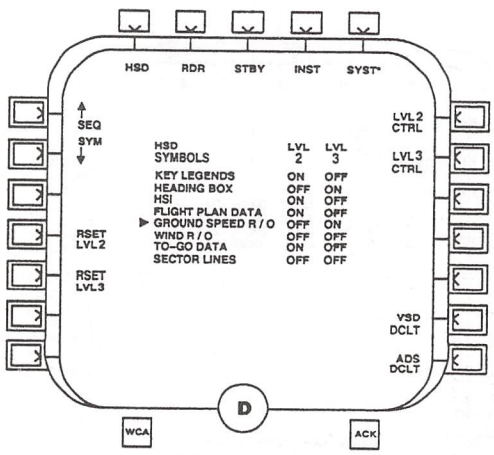

HSD DECLUTTER PAGE

AK0139_1
SA

Figure 3-49. System Control Page Flow Diagram (Sheet 1 of 2)

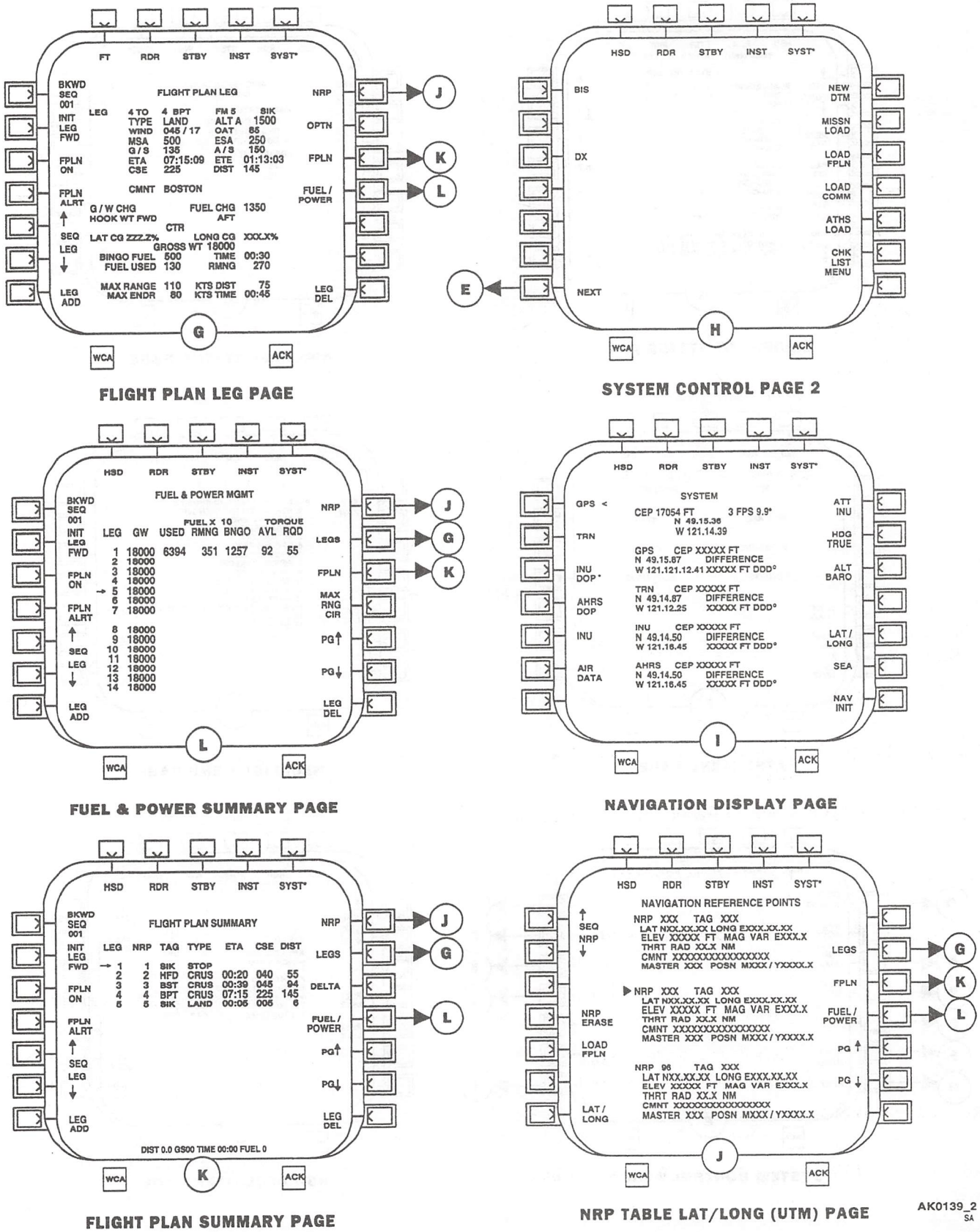

FLIGHT PLAN LEG PAGE

SYSTEM CONTROL PAGE 2

FUEL & POWER SUMMARY PAGE

NAVIGATION DISPLAY PAGE

FLIGHT PLAN SUMMARY PAGE

NRP TABLE LAT/LONG (UTM) PAGE

AK0139_2
SA

Figure 3-49. System Control Page Flow Diagram (Sheet 2 of 2)

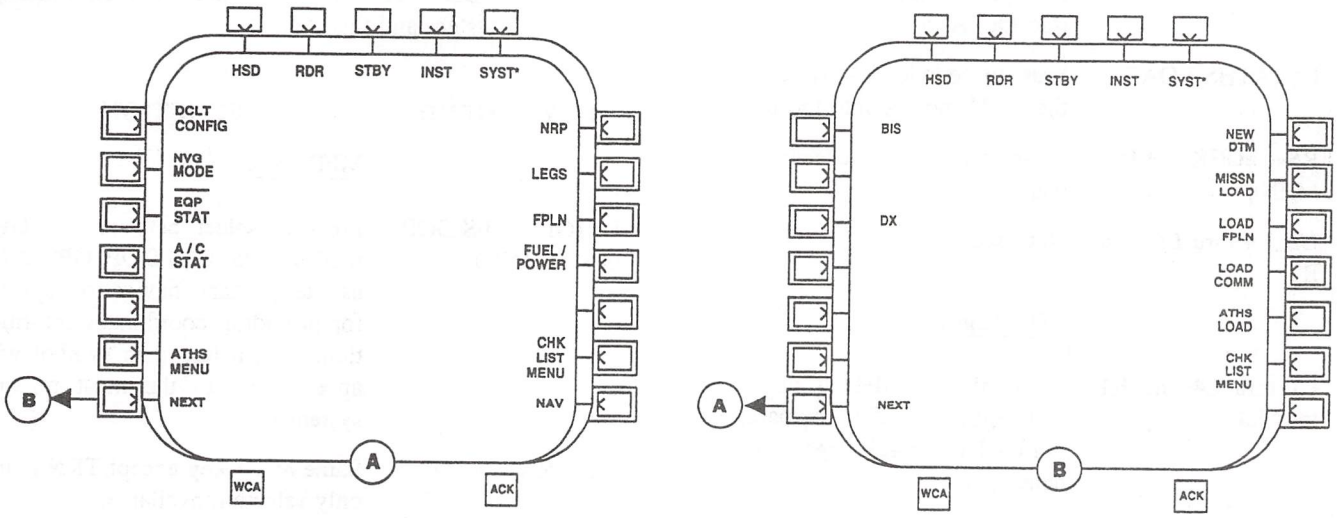

AK2490
SA

Figure 3-50. System Control Pages

KEY/LEGEND	FUNCTION
L3 (EQP STAT)	Press to access equipment status page 1.
L4 (A/C STAT)	Press to access the aircraft status page.
L6 (ATHS MENU)	Press to access the ATHS menu page.
L7 (NEXT)	Press to access system control page 1.
R1 (NRP)	Press to access the NRP table control page.
R2 (LEGS)	Press to access the flight plan leg control page.
R3 (FPLN)	Press to access the flight plan summary control page.
R4 (FUEL/POWER)	Press to access the fuel and power management control page.
R6 (CHK LIST MENU)	Press to access the checklist menu page.
R7 (NAV)	Press to access the navigation display page.
L5 and R5	Not used.

MFD Page 2

KEY/LEGEND	FUNCTION
L1 (BIS)	Maintenance function.
L3 (DX)	Maintenance function.
L7 (NEXT)	Press to access system control page 1.
R1 (NEW DTM)	Press twice when a new DTM module is installed into the map display generator.
R2 (MISSN LOAD)	Press twice to load mission data from the DTM module into the IASS.
R3 (LOAD FPLN)	Press twice to load flight plan from the DTM module into the IASS.

KEY/LEGEND	FUNCTION
R4 (LOAD COMM)	Press twice to load the communication plan from the DTM module into the IASS.
R5 (ATHS LOAD)	Press twice to load ATHS data from the DTM module into the IASS.
R6 (CHK LIST MENU)	Press to access the checklist menu page.
L2, L4 thru L6, and R7	Not used.
	CDU Pages
L1 thru L4 and R1 thru R4	Standard CDU default pages line key entries. Refer to paragraph 3-45, CDU Default Pages, for more details.

3-97. Navigation Display Pages.

These pages allow selecting a primary navigation system which provides present position coordinates of the aircraft (Figure 3-51). Position coordinates provided by all of the operating systems are displayed and can be compared for accuracy. Pilots may choose between UTM or LAT/LONG for display of position data. Use the following references when interpreting the data field on the MFD navigation pages:

(a) SYSTEM - Primary system selected.

NOTE

If ellipsis symbols (.....) appear adjacent to CEP, then that navigation system is unavailable/unuseable.

(b) FFFFF - Possible position error measured in diameter around system coordinates.

(c) GGZ - Grid zone designator.

(d) SS - Grid square identifier.

(e) EEEE - Easting coordinates.

(f) NNNN - Northing coordinates.

(g) XX - Possible velocity error in FPS of system velocity measurements.

(h) H. H - Possible heading error in degrees of system heading reference.

(i) PPPPP - Position difference between primary system and this system.

(j) DDD - Heading difference between primary system and this system.

KEY/LEGEND	FUNCTION
	MFD Page
L1 (GPS, GPS DOP, or GPS INU)	Press to select between the GPS modes (GPS, GPS DOP, GPS INU) as the primary navigation system for providing coordinates information. (<, a less than symbol will appear next to the most reliable system.)
L2 (TRN)	Same as L1 key except TRN is the only selection available.
L3 (INU DOP)	Same as L1 key except INU DOP is the only selection available.
L4 (AHRS DOP)	Same as L1 key except AHRS or AHRS DOP is the only selections available.
L5 (INU)	Same as L1 key except INU is the only selection available.
L6 (AIR DATA)	Same as L1 key except AIR DATA is the only selection available.
R1 (ATT INU)	Press to select INU or AHRS for attitude information to be displayed.
R2 (HDG MAG or TRUE)	Press to select magnetic (HDG MAG) or true (HDG TRUE) heading to be displayed.
	NOTE During APU to main generator or main generator to APU switchover, the previously selected altitude source may change.
R3 (ALT BARO or GPS)	Press to select barometric (ALT BARO) or GPS (ALT GPS) altitude information.
R4 (UTM SPHR) (UTM page only)	Press to select the spheroid value (C6, C8, INT, EVE, BES, AUST, WGS72, or WGS84) for the earth area in use. Refer to spheroid chart for correct number to use.

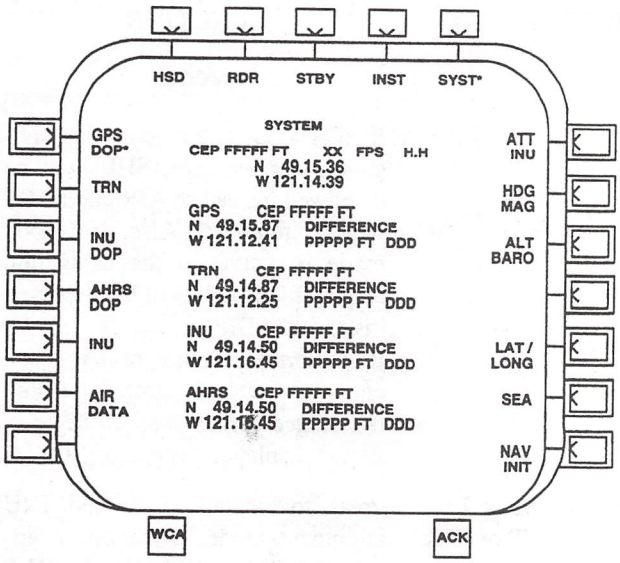

NAVIGATION DISPLAY IN LAT / LONG

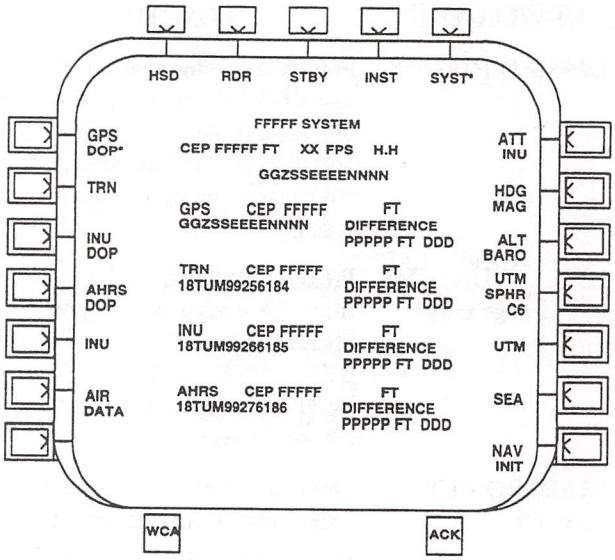

NAVIGATION DISPLAY IN UTM

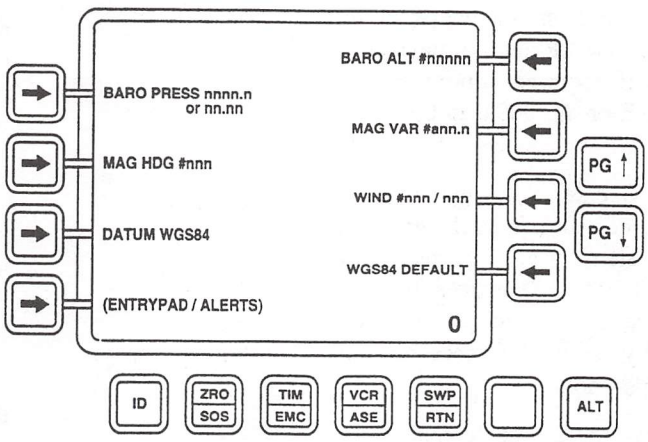

CDU PAGE

AK0276 SA

Figure 3-51. Navigation Display Pages

KEY/LEGEND	FUNCTION
R5 (UTM or LAT/ LONG)	Press to select between UTM or LAT/LONG for display of grid co-ordinates.
R6 (SEA or LAND)	Press to select between LAND or SEA mode of operation for the Doppler and setting navigation regression/progression path.
R7 (NAV INIT)	Press to access the navigation initialization page.

KEY/LEGEND	FUNCTION
R4 on LAT/LONG Page	Not used.
	CDU Page
L1 (BARO PRESS)	Press to enter the barometric pressure altitude value from the entrypad for system use. Entrypad data range: 800.0 to 1160.0 millibars or 26.00 to 34.00 inches.

KEY/LEGEND	FUNCTION
L2 (MAG HDG)	Press to enter the magnetic heading value from the entrypad for system use. Entrypad data range: 000 to 360 (000 and 360 are interpreted as the same value by the mission processor).
L3 (DATUM) (UTM page only)	Press to enter the spheroid value from the entrypad for system use. Sheroid values: C6, C8, INT, EVE, BES, AUST, WGS72, or WGS84. Refer to spheroid chart for correct number to use.
R1 (BARO ALT)	Press to enter the barometric altitude value from the entrypad for system use. Entrypad data range: -5000 to 32767 feet.
R2 (MAG VAR)	Press to enter the magnetic variation value from the entrypad for system use. Refer to navigation charts if required. Entrypad data range: E or W, 000.0 to 090.0 degrees.
R3 (WIND)	Press to enter the wind direction and speed value from the entrypad for system use. Entrypad data range: 000 to 360 degrees (000 and 360 are interpreted as the same value by the mission processor) and 0 to 200 knots.
R4 (DEFAULT)	Displays the current default spheriod value.

3-98. Navigation Initialization Pages.

These pages allow initialization of the navigation systems (Figure 3-52). Initialization is used to establish accurate starting coordinates for the system being initialized. Initialization coordinates returned by all of the operating systems are displayed and can be compared for accuracy. Pilots may choose between UTM or LAT/LONG for display of position data.

KEY/LEGEND	FUNCTION
	MFD Page
L1 (INU NAV)	Press to set the INU into navigate mode (INU NAV*, asterisk will appear when in use).

KEY/LEGEND	FUNCTION
	NOTE If SEA mode is active on the navigation display page, SHIP will be displayed instead of AIR and FAST will be removed. Also, if LAND mode is active on the navigation display page, AIR will be displayed instead of SHIP. If a normal alignment has been completed and the aircraft heading is changed greater than 70 degrees, EIA is displayed instead of NORM.
L2 (NORM or EIA, FAST, SHIP or AIR, or POS)	Press to select the desired INU alignment mode. Selections available: NORM or EIA, FAST, SHIP or AIR, and POS. NORM - Normal gyro compass alignment when aircraft has weight-on-wheels on a land surface environment, takes approximately 8 minutes. **NOTE** Set PARKING BRAKE handle and lock tailwheel before initiating an EIA alignment. Aircraft movement will cause an EIA alignment to abort. EIA - Enhanced interrupted alignment (EIA) improves the accuracy of the INU. After completion of a normal alignment, EIA is automatically displayed adjacent to L2 key when the aircraft is moved and aircraft heading change is greater than 70° (90° optimal). FAST - Can be selected if a normal alignment was performed during the previous shutdown. This alignment may take up to 1.5 minutes to complete. SHIP - Used when an alignment is initiated aboard a sea vessel. AIR - Samples position data from DNS and GPS navigation systems while in flight.

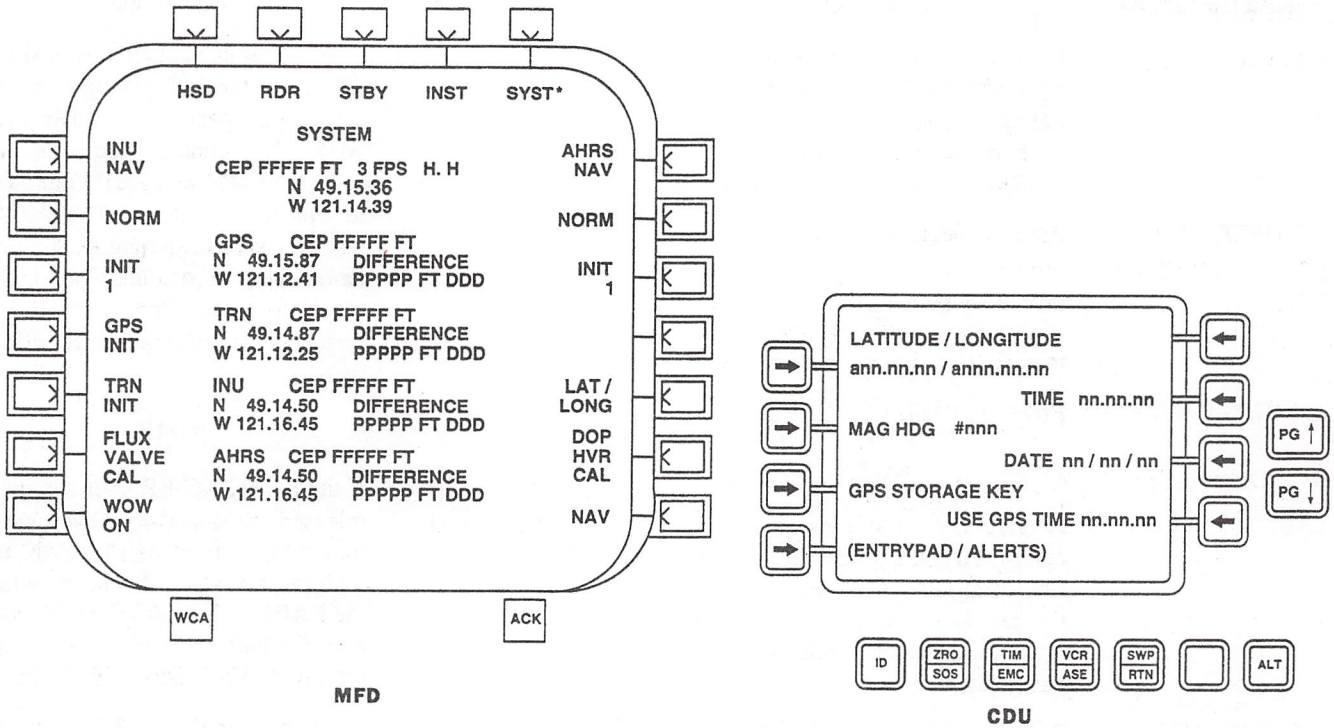

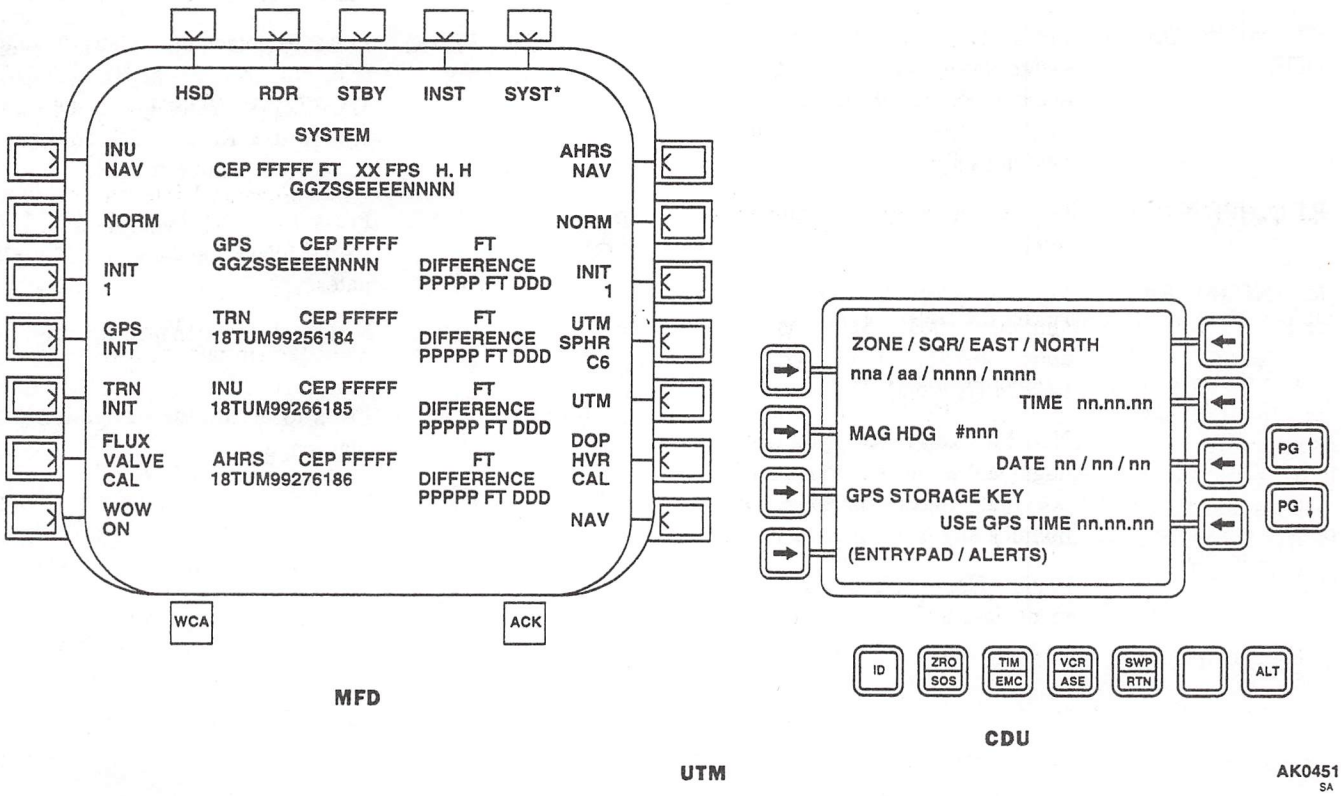

Figure 3-52. Navigation Initialization Pages

KEY/LEGEND	FUNCTION
	POS - Uses current aircraft position data from the CDU navigation initialization page to update the INU. This mode can be used after a NORM, FAST, or AIR alignment.
L3 (INIT)	Press to begin the INU alignment process or to execute the system position input for an update (asterisk appears while updating). Automatic system inputs: Blank, 1 to 8.
L4 (GPS INIT)	Press to initialize the GPS receiver.
	NOTE An INU normal alignment must be completed and digital terrain elevation data, radar and barometric altimeter data must be available in order to initialize terrain reference navigation.
L5 (TRN INIT)	Press to initialize terrain reference navigation.
L6 (FLUX VALVE CAL)	Not used, maintenance function.
L7 (WOW ON or OFF)	Press to override the current weight-on-wheels switch state for some software functions (Refer Table 2-1). Selections available: ON and OFF.
R1 (AHRS NAV)	Press to set the AHRS into navigate mode.
R2 (NORM, FAST, or POS)	Press to select the desired AHRS alignment mode. Selections available: FAST, POS (Position), NORM (Normal). NORM - Complete gyro compass alignment when aircraft is in a fixed position. Takes approximately 8 minutes and is the most accurate. FAST - Uses previous AHRS alignment data and takes up to 4 minutes.

KEY/LEGEND	FUNCTION
	POS - Uses current aircraft position data from the CDU navigation initialization page to update the AHRS. This function could be used after a NORM or FAST alignment to update the AHRS. The AHRS position will be automatically updated every 10 minutes. This mode can also be used alone, but will not provide the most accurate alignment. **NOTE** If the PARKING BRAKE handle is released before the FOM decrements to 1, the FOM value will remain at the value displayed when the PARKING BRAKE handle was released and the AHRS will be operating in a degraded condition.
R3 (INIT)	Press to begin the AHRS alignment process or to execute the system position input for an update (asterisk appears while updating). Automatic system entry: Blank, 1 to 8.
R4 (UTM SPHR) (UTM page only)	Press to select the spheroid value (C6, C8, INT, EVE, BES, AUST, WGS72, or WGS84) for the earth area in use. Refer to spheroid chart for correct number to use.
R5 (UTM or LAT/LONG)	Press to select between UTM or LAT/LONG for display of coordinates.
R6 (DOP HOV CAL)	Not used, maintenance function.
R7 (NAV)	Press to access the navigation display page.

KEY/LEGEND	FUNCTION
	CDU Page
L1 (LAT/LONG page only)	Press to enter latitude and longitude data from the entrypad for reference coordinates to be use with the initializing system. Entrypad data range: latitude - N or S, 00.00.00 to 90.00.00 (degrees, minutes, and seconds) and longitude - E or W, 000.00.00 to 180.00.00.
L1 (UTM page only)	Press to enter zone identifier, grid square, easting coordinate, and northing coordinate from the entrypad for reference coordinates to be used with the initializing system. Entrypad data range: zone - 01A to 60Z, grid square - AA to ZZ, easting - 0000 to 9999 meters, and northing - 0000 to 9999 meters .
L2 (MAG HDG)	Press to enter the magnetic heading value from the entrypad for system use. Entrypad data range: 000 to 360 (000 and 360 are interpreted as the same value by the mission processor).
L3 (GPS STORAGE KEY)	Not used.
L4 (Entrypad/Alerts)	Standard CDU default pages line key. Refer to paragraph 3-45, CDU Default Pages, for more details.
R2 (TIME)	Press to enter the time from the entrypad to update system time. Entrypad data range: 00.00.00 to 23.59.59 (hours, minutes, and seconds).
R3 (DATE)	Press to enter the date from the entrypad to update system date. Entrypad data range: 01/01/00 to 12/31/99 (month, day, and year).
R4 (USE GPS TIME)	Press to update system time to GPS time (hours, minutes, and seconds)
R1	Not used.

3-99. Global Positioning System.

The global positioning system (GPS), AN/ASN-149(V)2, is the primary position source for the aircraft. GPS provides three-dimensional position (LAT/LONG or UTM), velocity, and navigation data to the mission processor. The GPS consists of a receiver unit, KYK-13 fill port, an antenna electronics unit, and an antenna. The antenna is located on the top pylon above the aft transition section. The KYK-13 fill port is located on the avionics shelf in the transition section. GPS positioning information is obtained from satellites transmitting GPS data. GPS data is combined with INU or AHRS/Doppler information to improve the accuracy of its positioning data. GPS accuracy is greatest when four satellites are providing information; however, as few as two can be used to obtain positioning information. During operation and when selected as the primary navigation system, a figure of merit is maintained on the information received by the GPS receiver. When a figure of merit value of one is maintained by the GPS, the AHRS is updated with GPS positioning data every ten minutes. When this figure of merit is beyond the acceptable limit or GPS fails, the system automatically regresses to the next most accurate system as shown in Figure 3-48. A message in the MFD appears to alert the pilots of the changeover, a GPS FAIL advisory and NAV DEGRADED advisory will appear if the changeover was due to a GPS failure. For other messages associated with GPS, see Table 2-6. Power for the GPS is provided by the No.2 ac primary bus through a circuit breaker marked GPS on the copilot auxiliary circuit breaker panel.

3-100. KYK-13 Fill Port.

NOTE

The KYK-13 code must be loaded prior to flight if special access codes are required.

The KYK-13 fill port is the only means of loading the necessary codes to permit reception of GPS precision satellite data. Without these codes the GPS receiver cannot interpret the precision code satellite positioning data. These codes are loaded by connecting the KYK-13 key unit to the KYK-13 fill port and placing the adjacent load switch in the load position. When the KYK-13 is connected and the GPS receiver is powered on, pressing the load button will insert the codes into the GPS receiver memory. If the codes were loaded successfully, the load indicator light will flash.

3-101. GPS Normal Operation.

Operating instructions are described in paragraph 3-109, Positioning Systems Normal Operation, since system combinations may be selected for the primary navigation positioning system.

3-102. Inertial Navigation Unit and Terrain Reference Navigation.

The inertial navigation unit (INU), AN/ASN-141, is the primary source of attitude and heading reference data for the aircraft. It is also the primary source of synchro attitude for the AFCS and synchro magnetic heading. The INU consists of a ring laser gyro unit which provides heading, pitch attitude, and roll attitude as well as angular rate reference information. Inertially derived velocity in all three axes is combined with Doppler velocity to provide improved short-term velocity for calculating helicopter position. The system can operate as a terrain reference navigation (TRN) positioning system by combining digital map data with the help of Sandia Inertial Terrain Aided Navigation (SITAN - a software component of the map display generator), and radar and barometric altitude information. SITAN provides continuous position fixes to the mission processor by comparing radar altimeter ground clearance measurements with stored terrain elevation data. INU FAIL and AFCS DEGRADED caution messages will appear in the MFDs when the INU fails. ATTITUDE or TRUE HDG DISAGREE advisory message will appear in the MFDs when a difference between INU and AHRS attitudes and true headings exists. For other messages associated with the INU system, see Table 2-6. Power to the INU system is provided by the No.1 ac essential bus through circuit breakers marked INU SYNC, INU PWR, and INU FAN on the copilot auxiliary circuit breaker panel. DC power is provided by the battery utility and dc essential buses through circuit breakers marked INU on the lower and upper console circuit breaker panels respectively.

3-103. INU and TRN Normal Operation.

Operation instructions are described in paragraph 3-109, Positioning Systems Normal Operation, since system combinations may be selected for the primary navigation positioning system.

3-104. Attitude Heading Reference System.

NOTE

If a Doppler failure exceeds 20 minutes, the AHRS navigation capability becomes degraded to DG/VG mode.

The attitude heading reference system (AHRS) is the secondary source of attitude and heading reference data for the helicopter. It is also the source for the magnetic heading indicator. The AHRS consists of a sensor unit and an ML-1 flux valve, providing heading, pitch attitude, and roll attitude as well as angular rate reference information. The flux valve indicates magnetic heading and provides quick heading alignment capabilities. Inertial velocity in all three axes is combined with Doppler velocity to provide improved short-term velocity for calculating helicopter position data. AHRS FAIL and AFCS DEGRADED caution message will appear in the MFDs when the AHRS fails. ATTITUDE or TRUE HDG DISAGREE advisory message will appear in the MFDs when a difference between AHRS and INU attitudes and true heading exists. For other messages associated with the AHRS, see Table 2-6. Power to the AHRS is provided by the No.2 ac essential, dc essential, and battery utility buses through circuit breakers marked AHRS on the copilot auxiliary, upper console, and lower console circuit breaker panels, respectively.

3-105. AHRS Normal Operation.

Operation instructions are described in paragraph 3-109, Positioning Systems Normal Operation, since system combinations may be selected for the primary navigation positioning system.

3-106. Doppler Radar.

NOTE

Powering on the Doppler radar in flight, with AFCS heading hold engaged, may cause an aircraft heading change up to 9 degrees. Aircraft should return to original heading within 2 minutes.

The Doppler radar (AN/ASN-137), in conjunction with the mission processor, provides helicopter velocity information to the GPS, INU, and AHRS. The Doppler radar consists of a receiver/transmitter/antenna unit located in the copilot seatwell/bottom fuselage. The Doppler is limited to a maximum altitude of 10,000 feet. Doppler pitch and roll angles are limited to 30 degrees pitch and 45 degrees roll. Velocity information is degraded when these limits are exceeded or when the helicopter is over calm water surfaces. A DOPPLER FAIL advisory or a DOPPLER MEMORY annunciator message will appear in the MFDs when the Doppler fails or goes into memory. Power to the Doppler radar is provided by the No.2 dc primary and battery utility buses through circuit breakers marked DNS on the pilot and lower console circuit breaker panels.

3-107. Air Data Computer.

The air data computer (ADC) provides true airspeed, indicated airspeed, altitude rate, OAT, and pressure altitude to the mission processor for use within the IASS. Pressure inputs from the helicopter pitot and static system, temperature sensor information, and pressure altitude are combined

to determine true airspeed. The mission processor uses information from the air data system to update the positioning system's coordinates in use. The ADC can also generate positioning coordinates by itself; but, the accuracy is the least viable when compared to the other guidance positioning systems on board. Power to the ADC is provided by the No.1 dc primary bus through a circuit breaker marked AIR DATA CMPTR on the copilot circuit breaker panel.

3-108. Air Data Computer Normal Operation.

Operation instructions are described in paragraph 3-109, Positioning Systems Normal Operation, since system combinations may be selected for the primary navigation positioning system.

3-109. Positioning Systems Normal Operation.

There are five systems available from which one can be selected as the primary positioning reference system. Figure 3-48 identifies the systems available on the helicopter which can be used as a positioning reference system. Each system or system combination is capable of providing positioning reference data with the GPS/INU (these two in combination provide the most accurate capability). The GPS KYK-13 codes must be loaded into the system before the GPS receiver can decode the precision positioning data transmitted by GPS satellites. If KYK-13 codes are not loaded prior to takeoff, the helicopter must be landed and the codes loaded or the GPS will provide course acquisition data only. Position information is still available and accurate from the previous flight if the navigation data was not zeroized or the helicopter moved manually. If the system was zeroized or the helicopter was moved, the INU and AHRS must be realigned prior to flight. Both procedures can be done simultaneously. If GPS satellite data is available, its positioning data can be used during the alignment; if it is not available, the current position of the helicopter must be entered manually. Preset channels, frequencies, and MFD controls may be accessed by the collective and cyclic controls. Refer to paragraph 3-13, Cyclic and Collective Grips MFD Controls, for more details if required. Refer to the system control, navigation display, and navigation initialization pages as required for detailed line select key functions. The following procedures describe the use of the MFD and CDU to initialize the positioning systems:

1. Power on the GPS, INU, Doppler, AHRS, and ADC systems using the procedures outlined under the equipment status pages if required.

2. Initiate INU, AHRS, GPS, and TRN alignments.

NOTE

INU, AHRS, and GPS alignments/ initializations may be performed simultaneously.

a. To initiate an INU normal alignment, perform the following:

(1) Select MFD navigation page by pressing T5 (SYST) key, then R7 (NAV) key.

(2) Enter/reenter correct data on CDU navigation page (BARO PRESS or BARO ALT).

NOTE

If the Doppler is off or unavailable and the GPS is available, the pilot can select SEA mode, select AIR alignment, initialize (INIT) the alignment, then sequence back to the the LAND mode. This allows the INU to correctly select the Doppler or GPS as the velocity source if the Doppler becomes available.

(3) Select MFD navigation initialization page by pressing R7 (NAV INIT) key.

(4) Enter/reenter correct data on the CDU navigation initialization page (LAT/ LONG or UTM). (For GPS initialization, enter DATE and TIME (Zulu time).)

NOTE

If SEA mode is active on the navigation display page, SHIP will be displayed instead of AIR and FAST will be removed.

To perform a FAST alignment, a NORM alignment must have been performed prior to shutdown on the previous flight/aircraft runup and the aircraft must not have been moved.

If an EIA has been performed on since aircraft startup and to enable the capability to perform a FAST alignment on the next startup, a normal alignment must be performed before powering off the aircraft. The aircraft must be parked, the INU power off from the equipment status page, INU circuit breakers INU SYNC and INU PWR cycled, then a normal alignment must be performed.

(5) Press L2 key until desired INU alignment mode is displayed (NORM or FAST).

(6) Press L3 (INIT) key. The legend next to the key will count down from 8 to 1 (approximately 8 minutes for a normal alignment).

(7) If the number 8 fails to appear within INIT legend after 10 seconds, perform the following:

(a) MFD T5 (SYST) key press, then press MFD L3 (EQP STAT) key.

(b) Press R6 (PG▼) key twice and L2 (EQP▼) key once to sequence pointer adjacent to INU on equipment status page 3.

(c) MFD R2 key press twice to display PWR OFF, wait at least 10 seconds.

(d) Press MFD R7 (MAINT TEST) key twice - Maintenance test page will be displayed on all MFDs.

(e) Enter/Reenter zero "0" adjacent to CDU keys R1 (BORE PITCH), R2 (BORE ROLL), and R3 (BORE YAW).

(f) MFD R7 (EQP STAT) key press - MFDs should return to their previous display.

(g) Pull INU circuit breakers.

(h) Reset INU circuit breakers.

(i) Return to step a. above.

If the INU displays the number 8, but fails to acquire a valid LAT/LONG after 10 seconds, perform the following:

(j) Press MFD T5 (SYST) key, then press L3 (EQP STAT) key.

(k) Press R6 (PG▼) key twice, then press L2 (SEQ EQP▼) key once to sequence pointer adjacent to INU on equipment status page 3.

(l) Press R2 (PWR ON) key twice. PWR OFF should be displayed adjacent to R2 key. Wait at least 10 seconds, then pull the INU circuit breakers.

(m) Reset INU circuit breakers. PWR ON should be displayed adjacent to R2 key on equipment status page 3.

(n) Return to step a. above.

(8) INU alignment is successfully completed when a 1 is displayed adjacent to L3 (INIT) key (approximately 8 minutes).

WARNING

Terrain following (TF) mode of the multimode radar (MMR) shall not be used after an INU SHIP alignment.

NOTE

Doppler or GPS data must be available and the WOW switch enabled to perform an INU SHIP alignment.

b. To initiate an INU SHIP alignment, perform the following:

(a) Press MFD T5 (SYST) key, then press MFD R7 (NAV) key.

(b) Press MFD R6 key until SEA is displayed.

(c) Press MFD R7 (NAV INIT) key to display navigation initialization page.

(d) Enter/reenter correct data on the CDU navigation initialization page (LAT/LONG or UTM).

(e) Press MFD L2 key to display SHIP.

NOTE

If the SHIP alignment cannot be completed before takeoff, two options are available: Pilot can press L3 (INIT) key and takeoff after pitch, roll, and heading data are available (indicated by the presence of heading and attitude indications on an MFD VSD/HSD page) or waiting eight minutes for an AIR alignment to start automatically (indicated by L3 (INIT) key displaying a 5). After takeoff, perform AIR alignment as described in AFTER TAKEOFF procedures.

(f) Press MFD L3 (INIT) key to start the SHIP alignment. Maintain WOW until alignment is complete as indicated by L3 (INIT) key legend decrements from 5 to 1 (approximately 45 minutes).

c. To initiate an INU AIR alignment, perform the following:

WARNING

Terrain following (TF) mode of the multimode radar (MMR) shall not be used during or after an INU AIR alignment.

NOTE

Doppler or GPS data must be available and the WOW switch must be disabled to perform an INU AIR alignment.

(1) Press MFD T5 (SYST) key, then press R7 (NAV) key.

(2) Press MFD R6 key until LAND is displayed.

(3) Press MFD R7 (NAV INIT) key to display navigation initialization page.

(4) Enter/reenter correct data on the CDU navigation initialization page (LAT/LONG or UTM).

NOTE

If AIR is not displayed adjacent to L2 key with WOW disabled, then an AIR alignment cannot be performed.

(5) Bring the aircraft to a hover, then press L2 key until AIR is displayed.

(6) Take off and fly straight and level. Press MFD L3 (INIT) key to start the AIR alignment or wait 8 minutes for the air alignment to automatically start. The L3 (INIT) key legend will decrement from 5 to 1 in 45 minutes.

(7) Continue in straight and level flight until L3 (INIT) key legend displays 3, or fly straight and level for 6 to 8 minutes then turn 180 degrees and continue straight and level flight until the L3 (INIT) key legend decrements to 3. Use flight director heading hold during straight and level flight. Once the L3 (INIT) key legend decrements to 3, the pilot can continue normal flight.

(8) Once L3 (INIT) key legend decrements to 2 (23 minutes into the alignment), degraded navigation must be selected by activating L1 (INU NAV) key on the navigation initialization page. INU AIR alignment is complete when L3 (INIT) key legend decrements to 1.

d. To align AHRS, perform the following:

(1) Press R2 key until the desired alignment mode is displayed (FAST or NORM).

NOTE

If the PARKING BRAKE handle is released before R3 (INIT) key legend decrements to 1, R3 (INIT) key legend value will remain at the value displayed when the PARKING BRAKE handle was released and the AHRS will be operating in a degraded condition.

(2) Press R3 (INIT) key. The legend next to this key will display 8.

(3) AHRS alignment is successfully completed when a 1 is displayed adjacent to R3 (INIT) key (approximately 8 minutes).

NOTE

If a Doppler failure exceeds 20 minutes or the Doppler goes into memory for 20 minutes while the AHRS is in the NAV mode, the AHRS will degrade to DG/VG mode. AHRS NAV mode will be unavailable.

When the PARKING BRAKE handle is released or weight-off-wheel occurs, the system will automatically transition to INU and AHRS navigate modes. The IASS will also select the most accurate navigation system available to provide aircraft position information.

An INU normal alignment must be completed and digital terrain elevation data, radar and barometric altimeter data must be available in order to initialize terrain reference navigation.

e. Press L4 (GPS INIT) and L5 (TRN INIT) keys to initialize the GPS and TRN systems.

3. Select primary positioning systems as desired; however, the "<" less than symbol identifies the system preferred by the mission processor.

3-110. Flight Director.

The mission processor can generate guidance information to UTM or LAT/LONG coordinates based on the coordinates data provided by the current positioning system in use. From the current aircraft position as determined by the positioning system inputs, the mission processor can calculate and provide navigation information to other coordinates, commonly called navigation reference points (NRPs). Once an NRP is established, the mission processor can use it to provide guidance information to and from, as if the NRP was a NAVAID. In addition to guidance information, the mission processor also calculates time in route, fuel usage data, wind correction, course intercept angles, provides course deviation indications, depicts flight plan legs (up to four legs), power availability and required, performs positioning system updates, and stores sensor and flyover coordinates. The flight director capability allows generating flight route data in areas when no NAVAID exist. This is very useful during tactical missions under inclement weather conditions. A computer generated NRP can be use instead of a tactical nondirectional beacon. Approach angles, heading, and safe altitude cues can be generated by the computer for tactical landing site when real NAVAIDs are unavailable. However, the pilot must remember that the accuracy of computer generated guidance to NRPs substituting as a NAVAID, is only as accurate as the present aircraft coordinates. Therefore, the current positioning system coordinates should be updated as often as the mission will allow when using NRPs to provide guidance data. There are several modes in which guidance information is provided on the MFDs: course, track, heading, approach/go around, altitude hold, groundspeed hold, terrain following, flight path vector, hover hold, waypoint, and NRP. The course, track, altitude hold, and groundspeed modes are normally available during all flight conditions and can be used in conjunction with a NAVAID approach and airway route. Guidance corrections are primarily provided through the command plane and collective power cues. Therefore, the pilot must move collective and cyclic as required to superimpose the command plane symbol over the aircraft symbol plus null the collective power cue if displayed, to comply with commands for the selected mode(s). In the flight path vector mode, the pilot must superimpose the flight path vector over the command plane cue and plus nulling the collective power cue. The mode(s) and display symbology (HSD, VSD, or HVR) selected will determine which cues are displayed.

3-111. HSD, VSD, HVR, and ADS Symbology Pages.

NOTE

The pilot can use the declutter mode to display necessary information only, thereby reducing unnecessary symbols.

There are many symbols that can be displayed on HSD, VSD, and ADS symbology. The key selection made will determine which symbols appear. The keys that determine which symbols will appear are available on several system

control pages; therefore, thoroughly understanding and becoming thoroughly familiar with the symbology display symbols will facilitate speed and accuracy for the pilot. Symbols and indicators for HSD, VSD, HVR, and ADS symbology displays can be decluttered to reduce/eliminate undesirable indicators/symbols.

a. Vertical Situation Display (VSD) Symbology. The VSD symbology provides a combination of attitude indicators in reference to the vertical plane and other essential flight data which are displayed in the VSD mode only (Figure 3-53). The number and variety of symbols on the VSD is determined by the declutter control page. Once the symbology has been predefined for Levels 2 and 3, the display symbology can be changed quickly by pressing MFD L1 (DCLT 1, 2, or 3) key. Declutter level 1 is the full display of all possible symbols.

INDICATOR	FUNCTION
Aircraft Symbol	The aircraft symbol displays the helicopter attitude with reference to the artificial horizon.
Airspeed Box	Digital indication of helicopter indicated airspeed. On color MFDs displaying VSD symbology, velocities are shown in green, yellow, and red. (Green - 163 KIAS and below; Yellow - 164 KIAS to 182 KIAS; and Red - above 182 KIAS.)
Airspeed Pointer	The airspeed pointer indicates the current aircraft airspeed in reference to the airspeed scale.
Airspeed Scale	The airspeed scale is a linear type scale for airspeed reference. Only a forty knot range of the airspeed analog scale is displayed at any one time. As airspeed changes, the portion of the scale displayed will change to show a higher or lower range. The scale is divided into five-knot increments.
Attitude Source	Indicates source of VSD attitude data. An (A) indicates that the attitude source is the AHRS. An (I) indicates that the INU is the source. If an attitude source is unreliable, the system will switch to the alternate source, if available, while the original source (A or I) will appear in reverse video. If none is available, the pitch scale, aircraft symbol, bank angle scale, bank angle pointer, and attitude source symbol (A or I) will be removed automatically from the VSD.
Bank Angle Limit Indicator	Indicates recommended maximum bank angle based on current aircraft turn rate and airspeed. This symbol only appears when the terrain following (TF) guidance mode is armed or active on the VSD page.
Bank Angle Scale and Pointer	The scale provides helicopter bank angle reference. Divisions are at 10, 20, 30, and 60 degrees left and right. The pointer indicates the current helicopter bank angle with reference to the bank angle scale.
BARALT Box	Indicates the barometric altitude up to 51,000 feet. When barometric altitude hold has been selected on the MFD tactical navigation control page, the barometric altitude box will be thicker than normal.
Caution Box and Multiple Caution Indicator	Displays a caution message of critical equipment failures. If multiple failures occur, the higher priority will be displayed first. If a downward arrow appears to the right of the box, there are additional cautions awaiting acknowledgment.

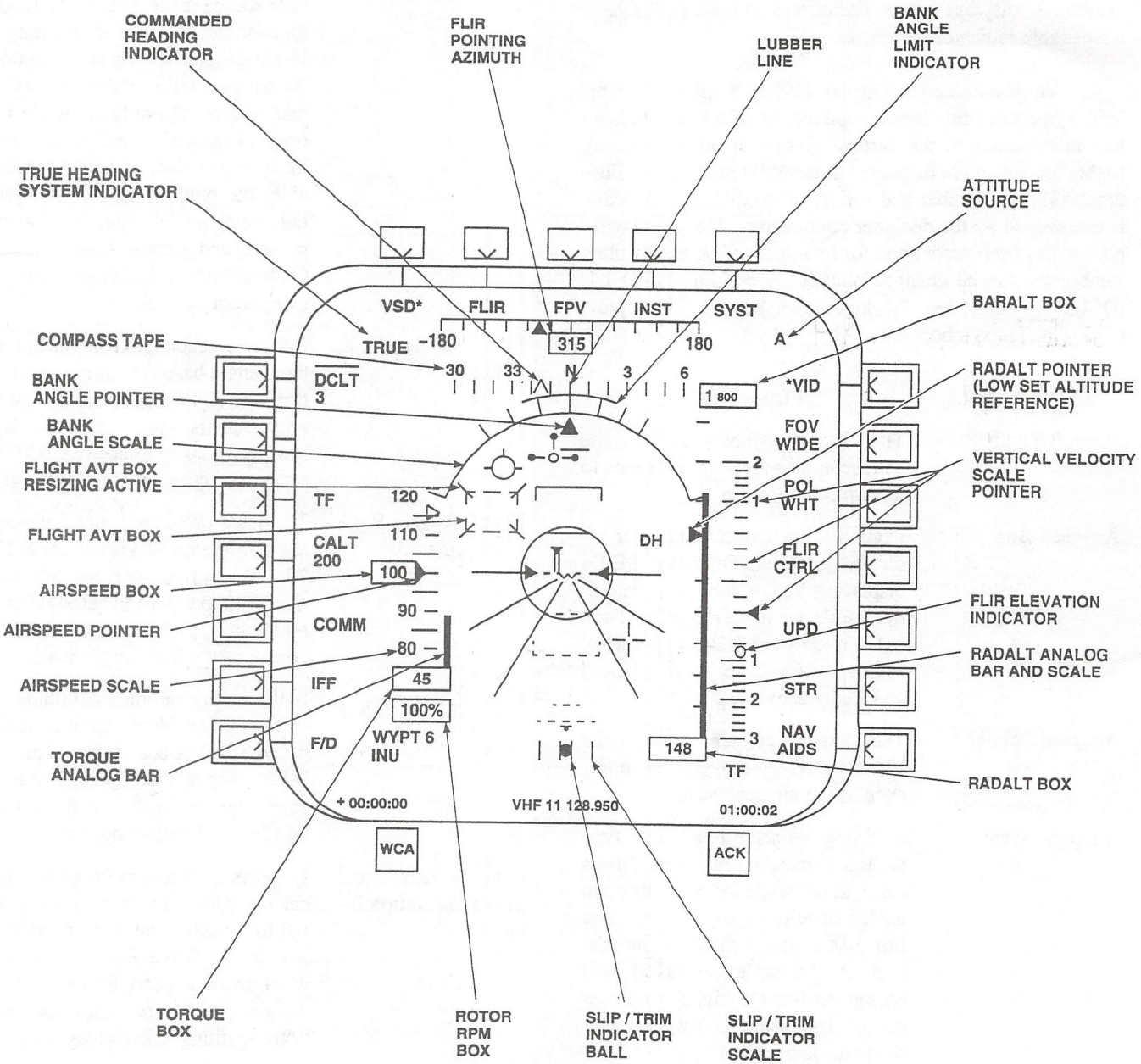

AK0117_1
SA

Figure 3-53. MFD Vertical Situation Display Symbology (Sheet 1 of 2)

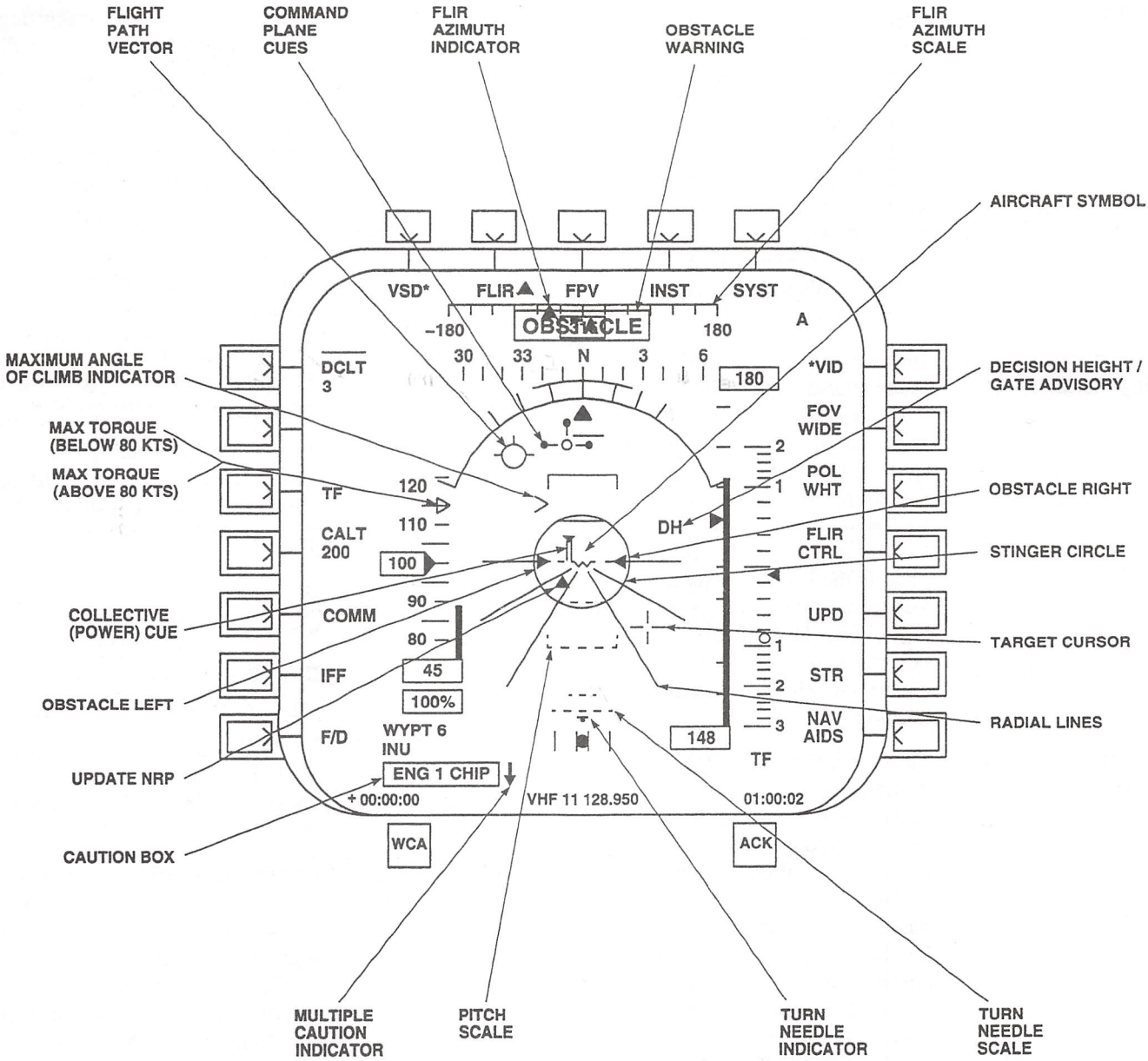

AK0117_2
SA

Figure 3-53. MFD Vertical Situation Display Symbology (Sheet 2 of 2)

INDICATOR	FUNCTION
Collective (Power) Cues	Indicates that present collective setting is either too low or too high. Parallel lines and a solid triangle prompt the pilot to adjust collective accordingly. The bars will extend downward and the triangle points upward when an increase in power (collective) is required and the bars extend upward and the triangle points downward when a decrease in power is required. A diamond will be displayed when the power is at the proper value.
Commanded Heading Indicator	Indicates the current heading reference course when HDG-REF or TRK key is activated on the MFD page or as entered by the pilot through the CDU. This symbol appears only when a navigation mode has been selected on an MFD page that provides course or heading data. If the heading required is beyond the limits of the compass scale, one half of the reference heading indicator will be obscured on the side closest to the reference heading.
Command Plane Cue	The command plane indicates the desired flight path. The pilot must move the collective and cyclic as required to superimpose this symbol over the aircraft symbol. The horizontal extensions on the command plane symbol appears when longitudinal steering (groundspeed/airspeed) on an MFD has been selected. The vertical extension, upward only, appears when a lateral steering aid (WYPT, NRP, APPR, VOR, VORTAC, ILS, IBC, PLS, TACAN, TCNP, TRK, GA, or ADF mode) has been selected. When operating the FLIR, the command plane symbol provides guidance to the selected NRP.
Compass Tape	Rotates above lubber line to indicate helicopter current magnetic or true heading. True heading is displayed when HDG TRUE has been selected on the navigation MFD page. Magnetic heading is displayed when HDG MAG has been selected with the same key.
Decision Height/ Gate Advisory	This decision height advisory (DH) appears when the preset decision height has been reached. The gate advisory (GATE) appears when the aircraft is within the approach gate.
Flight Path Vector	The flight path vector (FPV) indicates the aircraft flight path.
FLIR AVT Box	This box appears when AVT is displayed under T3 during FLIR operations. The box is placed over a target/object for automatic video tracking. Solid Box - Primary AVT box while in autotracking. Dashed Box - Primary AVT box before autotracking. Box with corners only - Secondary AVT box, cannot be resized or tracked so long as it remains the secondary box. Box with diagnoal line extending at corners - The resizing extensions appears at each corner of the box when the AVT button on the track handle is pressed with AVT displayed under T3 key during FLIR operations. While the resizing extensions are present, the track handle thumb control will increase/decrease the width and height of the box. Pressing the AVT button again will deactivate the resizing feature.

INDICATOR	FUNCTION
FLIR Azimuth Indicator	Indicates the FLIR pointer angle in reference to the maximum left and right FLIR limits (up to 180° right and 180° left). The FLIR can slew an additional 40° left and right beyond the indicator limits; however, this will not be indicated by the FLIR azimuth indicator. When FLIR azimuth exceeds 180° left or right, the FLIR azimuth indicator will be positioned outside of the last scale mark.
FLIR Azimuth Scale	Indicates the maximum left and right FLIR limits (up to 180° right and 180° left). The FLIR can slew an additional 40° left and right beyond the indicator limits; however, this will not be indicated by the FLIR azimuth indicator on the FLIR azimuth scale.
FLIR Elevation Indicator	Indicates the FLIR elevation pointing angle as provided by the FLIR turret. Between +1000 and -1000 (scale mark adjacent to the number 1) feet per minute on the vertical velocity scale, each scale mark represents 9 degrees. Above +1000 and below -1000 feet per minute on the vertical velocity scale, each scale mark represents 5.5 degrees.
FLIR Pointing Azimuth	Digital readout of the TFU pointing azimuth.
Lubber Line	Reference index for delineating heading, displayed on the compass scale tape.
Maximum Angle of Climb Indicator	Indicates maximum angle of climb attainable under current conditions. Only in use if TF radar mode is active.
Maximum Torque Indicators (Above and Below 80 knots)	Indicate the maximum torque limits as applicable to various conditions. The limits are related to the vertical analog torque bar and apply when the torque bar is adjacent to the respective pointer under that airspeed condition.
Obstacle Left/Right Indicators	Obstacle right, and/or left indicators appear, as appropriate, when the MMR detects the presence of an obstacle/hazardous terrain beyond the safety limits of the current flight path. Symbol(s) appear in TF mode only.
OBSTACLE Warning	Indicates that the MMR has detected an obstacle based on the clearance plane values entered by the pilot on the MFD. This indicator appears only when terrain following (TF) mode is active.
Pitch Scale	Indicates current helicopter pitch attitude with reference to the artificial horizon. The miniature represents the aircraft.
RADALT Analog Bar	Indicates the aircraft absolute altitude reference against the radar altimeter scale. The radar altimeter bar, scale, pointer, and readout will not be seen when any of the following conditions exist: the radar altimeter altitude exceeds 1000 feet, the radar altitude is invalid for more than 30 seconds (display will flash for a 30 second period), or the radar altimeter is placed into standby or turned off. The radar altitude symbols will reappear when the radar altitude returns below 1000 feet.
RADALT Box	Provides a digital indication of helicopter radar altitude (0 to 1500 feet). When radar altitude hold has been selected on the MFD tactical navigation control page, the radar altitude box will be thicker than normal.
RADALT Pointer (Low Set Altitude Reference)	Indicates the low altitude alert value as entered by the pilot on the CDU for the RADALT. An altimeter low alert (RALT LOW) will be displayed when the aircraft is at or below this value.

INDICATOR	FUNCTION
RADALT Scale	Provides reference for RADALT analog bar and RADALT pointer. The bottom of the scale is 0 feet and the top of scale is 1000 feet. The divisions (tick marks) on the radar altimeter scale are fixed at 10, 20, 30, 40, 50, 100, 500, and 1000 feet.
Radial Lines	Serve to provide a better separation between ground and sky with reference to the horizon.
Rotor RPM Box	Provides digital indication of main rotor rpm (NR).
Slip/Trim Indicator Ball	Indicates the aircraft's sideslip/trim condition.
Stinger Circle	Indicates missile field of view. It is displayed when the missile is armed.
Target Cursor	An open-centered crosshair which provides a pointing reference when using a sensor for updating, storing, and ranging and azimuth information. Target cursor placement is controlled by the thumb tracker on the track handle.
Torque Analog Bar	Indicates an average engine torque when two engines are operating or the torque of one engine, if only one is operating.
Torque Box	Provides a digital percent representation of engine torque as an average of both engines, or of the high engine if the low engine is at or below 75% NG, or of a single engine if only one engine is operating.
TRUE Heading System Indicator	Diplays TRUE when true heading is used as the aircraft heading reference source. Blank when magnetic heading is the aircraft heading reference source.
Turn Needle Scale and Indicator	Indicates helicopter turn direction and rate.
Update NRP	Indicates the location of the NRP currently selected as the update NRP. NRP updates can be made via TACAN, flyover, and sensor modes.
Vertical Velocity Scale and Pointer	Indicates the vertical speed in feet per minute (FPM). Each arabic number is multiplied by 100 (i.e., 1 would be 100 feet per minute).

b. Horizontal Situation Display (HSD) Symbology. The HSD symbology provides a combination of heading/course indicators and video displays in reference to the horizontal plane and other essential flight data (Figure 3-54). The number and variety of symbols on the HSD is determined by the declutter control page. Once the symbology has been predefined for Levels 2 and 3, the display symbology can be changed quickly by pressing MFD L1 (DCLT 1, 2, or 3) key. Declutter level 1 is the full display of all possible symbols. The HSD symbology can be viewed centered or decentered, which places the aircraft symbol in the center or at the bottom of the display respectively. The HSD centered display provides 360 degrees of horizontal information, while the decentered display provides less than 90 degrees of information in front of the aircraft.

INDICATOR	FUNCTION
	NOTE The letter symbol at the pointing end of a needle rotates independently of the needle rotation to always appear horizontal.
ADF Needle	Indicates relative bearing to a transmitting low frequency station (nondirectional beacon or AM radio station).

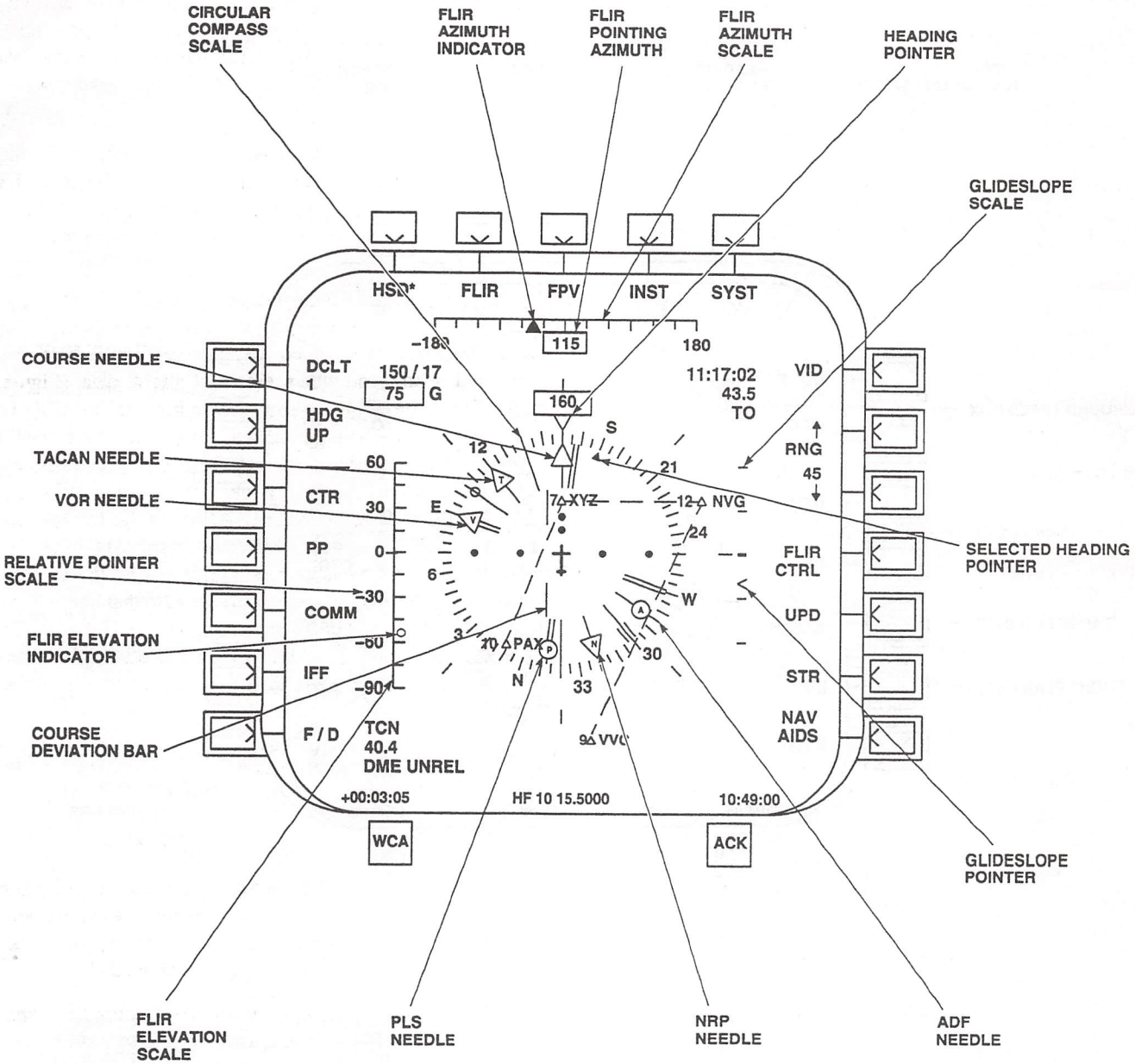

AK0118_1
SA

Figure 3-54. MFD Horizontal Situation Display Symbology (Sheet 1 of 3)

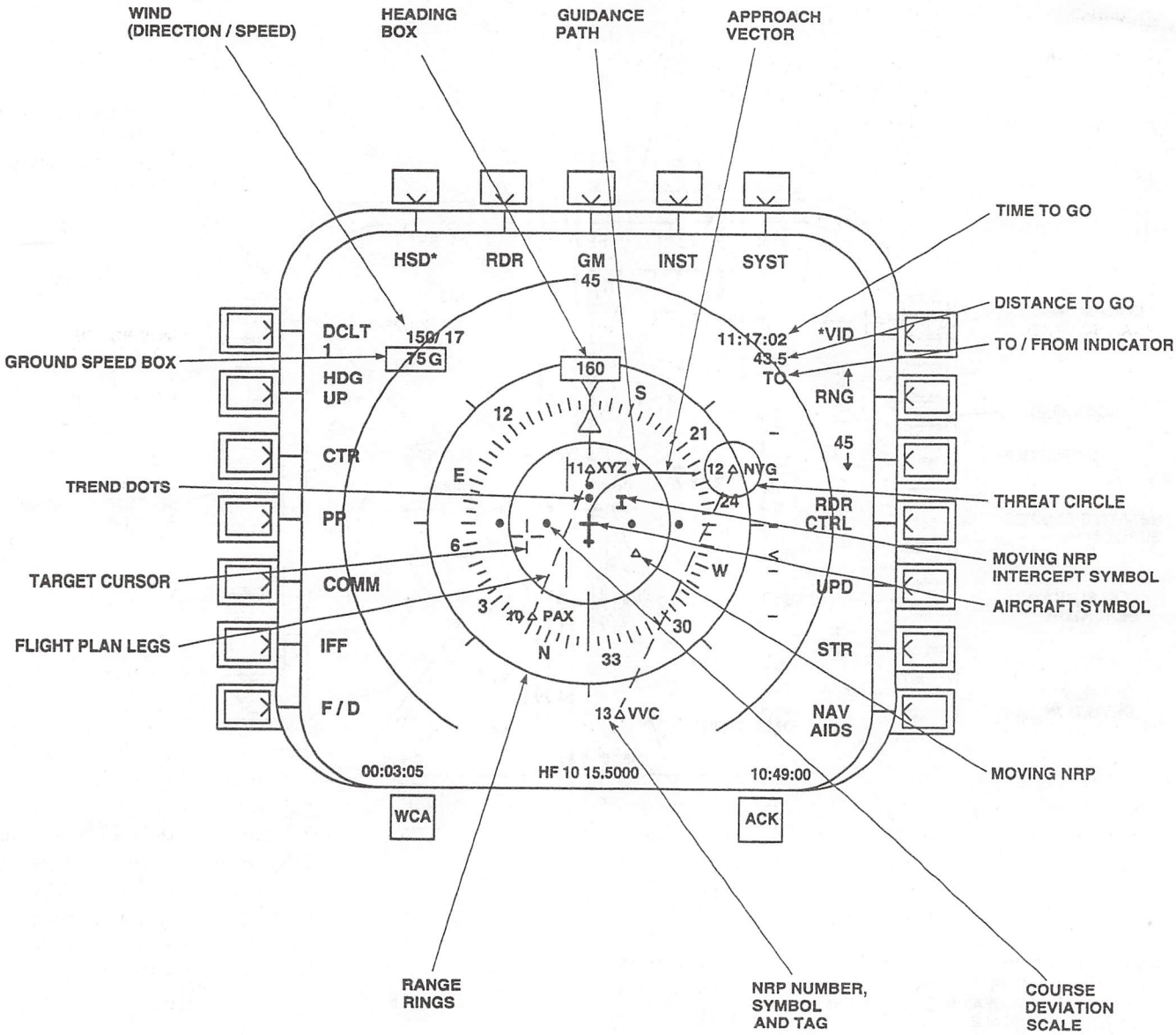

AK0118_2
SA

Figure 3-54. MFD Horizontal Situation Display Symbology (Sheet 2 of 3)

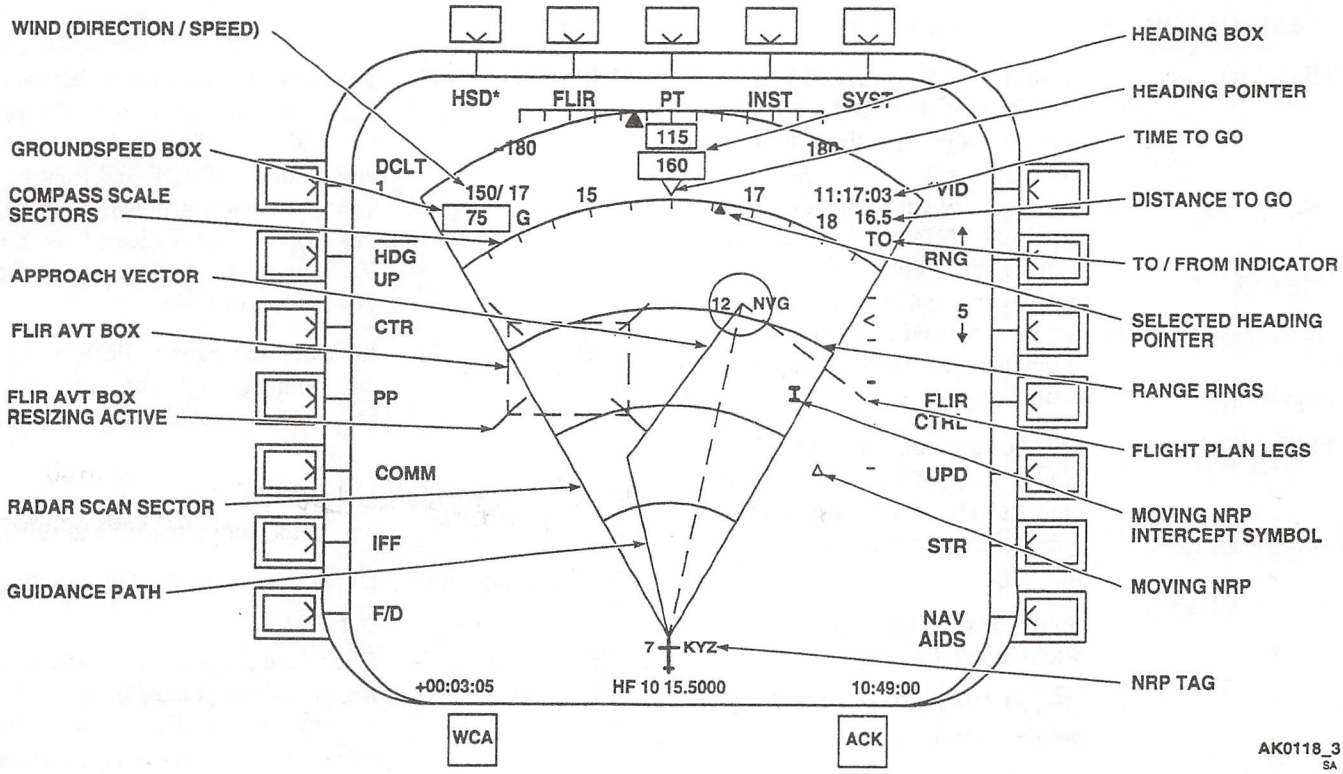

Figure 3-54. MFD Horizontal Situation Display Symbology (Sheet 3 of 3)

INDICATOR	FUNCTION
Aircraft Symbol	Indicates aircraft heading in reference to the relative bearing scale and display. In the north up or track mode, this symbol will rotate with the heading of the aircraft unless the nose of the aircraft is pointing north or aligned with the selected track, respectively.
Approach Vector	This symbol indicates the final approach path to the current selected NRP and the approach mode is active. This symbol also appears when a track and course to an NRP has been selected and the aircraft present position is significantly off the inbound course.
Circular Compass Scale/Sector	Compass rose heading reference for both magnetic and true directions. When TRUE is displayed in the upper left corner of the MFD, the compass is indicating true heading while the absence of TRUE means magnetic heading is displayed.
Course Deviation Bar and Scale	The course deviation bar indicates deviation from a desired course when used with a NAVAID or NRP. When used with a localizer, each dot on the scale represents 1.25 degrees left or right of course. When used with the VOR or TACAN, each dot represents 5 degrees left or right of course. When used with the NRP or APPR mode, the dots are equal to 0.5 nautical miles left or right of course.
Course Needle	Indicates the track selected and this needle will be seen only if the track mode has been selected.
Distance to Go	Distance to go represents the estimated distance to the current destination point (NRP). The distance is based on current aircraft velocity as computed by the mission processor.

INDICATOR	FUNCTION
Flight Plan Legs	Dash lines between NRPs represent a flight plan leg. Only four legs, starting from the aircraft current position in a flight plan, can be displayed at one time. However, more than four NRPs can be listed in a flight plan. Flight plan legs will only be displayed when a flight plan has been entered and the flight plan is activated on the MFD flight plan summary page.
FLIR AVT Box	This box appears when AVT is displayed under T3 during FLIR operations. The box is placed over a target/object for automatic video tracking. Solid Box - Primary AVT box while in autotracking. Dashed Box - Primary AVT box before autotracking. Box with corners only - Secondary AVT box, cannot be resized or tracked so long as it remains the secondary box. Box with diagnoal line extending at corners - The resizing extensions appears at each corner of the box when the AVT button on the track handle is pressed with AVT displayed under T3 key during FLIR operations. While the resizing extensions are present, the track handle thumb control will increase/ decrease the width and height of the box. Pressing the AVT button again will deactivate the resizing feature.
FLIR Azimuth Indicator	Indicates the FLIR pointer angle in reference to the maximum left and right FLIR limits (up to 180° right and 180° left). The FLIR can slew an additional 40° left and right beyond the indicator limits; however, this will not be indicated by the FLIR azimuth indicator. When FLIR azimuth exceeds 180° left or right, the FLIR azimuth indicator will be positioned outside of the last scale mark.

INDICATOR	FUNCTION
FLIR Azimuth Scale	Indicates the maximum left and right FLIR limits (up to 180° right and 180° left). The FLIR can slew an additional 40° left and right beyond the indicator limits; however, this will not be indicated by the FLIR azimuth indicator on the FLIR azimuth scale.
FLIR Elevation Indicator	Indicates the current FLIR elevation pointing angle (between +60° and -90°) as provided by the FLIR turret.
FLIR Elevation Scale	Indicates the FLIR elevation pointing limits (between +60° and -90°).
FLIR Pointing Azimuth	Digital readout of the TFU pointing azimuth.
Glideslope Scale and Pointer	Glideslope scale provides reference for glideslope pointer in 0.25- degree increments. The pointer indicates the aircraft's deviation from glidepath during an approach.
Groundspeed Box	This box contains the groundspeed as determined by the navigation system. If GND SPD SEL is active on the tactical navigation page, the groundspeed box will be thicker than normal.
Guidance Path	The guidance path is displayed when the helicopter deviates by one mile or more from the course designated in the flight plan when in the waypoint (WYPT) or NRP modes of navigation. This symbol will not be seen when the waypoint or NRP modes of flight director are not selected.
Heading Box	Indicates true or magnetic heading as determined by the selection made by the pilot. When HDG SEL has been selected on the MFD tactical navigation control page, the heading box will be thicker than normal.

INDICATOR	FUNCTION
Heading Pointer	Reference point for compass circle. This symbol is only seen when (HDG UP) has been selected on the HSD page.
Moving NRP	The moving NRP symbol represents the current position of a moving NRP. The triangle moves in the direction of the NRP movement. This symbol will move at the speed and in the direction entered by the pilot in the NRP table.
Moving NRP Intercept Symbol	This symbol indicates the predicted intercept point of a moving NRP and the aircraft if their current flight paths will cross. This symbol location is based on the current aircraft speed, and the speed of the moving NRP as entered by the pilot.
NRP Needle	Indicates relative bearing to a selected navigational reference point (NRP). This needle appears when the waypoint or NRP mode is selected.
NRP Number	Represents the index number of the NRP symbol to its immediate right. This number corresponds to the NRP number on the NRP table MFD page.
NRP Tag	Three letter identification used to help in NRP recognition. The NRP tag is entered in the NRP table CDU page. The NRP tag always appears to the right of the NRP symbol.
NRP Symbol	Indicates the coordinates of an NRP as listed in the NRP table with respect to the coordinates being provided by the current aircraft position system in use.
PLS Needle	Indicates relative bearing to an emergency locator transmitter (ELT), or survival radio (AN/PRC-90 or AN/PRC-112).
Radar Scan Sector	Fan-shaped image that depicts the area being scanned.
Range Rings	The range rings are used as an aid to determine distances. The range rings can be turned on or off from the radar, FLIR, or map control pages.
Relative Bearing Scale	Fixed marks at 45 degrees, starting from the nose of the aircraft, around the compass rose.
Selected Heading Pointer	Indicates heading entered by the pilot for a course or track to a NAVAID or NRP. This symbol is only seen when a mode that supports lateral guidance cues has been selected on the flight director pages.
TACAN needle	Indicates relative bearing to a TACAN station.
Target Cursor	The target cursor is used to mark a location for updating or identification. This symbol is also used to point (slew) aircraft sensors at a particular spot.
Threat Circle	The threat circle represents a radius around an NRP that has been identified as a threat. The size and location of the circle is entered in the NRP tables.
Time to go	Time to go represents the estimated time to reach the current destination point/NRP. The time is based on current aircraft velocity and distance to go, as computed by the navigation system.
TO/FROM Indicator	Indicates direction to or from a VOR or TACAN station.
Trend Dots	The three trend dots indicate the predicted location of the helicopter in the next ten, twenty, and thirty seconds if present flight conditions are maintained.
VOR needle	Indicates relative bearing to a VOR station.

INDICATOR	FUNCTION
Wind Direction/ Speed	Indicates wind direction and speed as computed by the mission processor via the air data system or manually entered data when the air data system or Doppler is inoperative.

c. Hover Display Symbology. The hover display presents information required for the hovering mode of flight (Figure 3-55). Hover airframe/box symbols support altitude hold modes with (RALT SEL) or (BALT SEL) selected on the tactical navigation control page. If no altitude hold mode is selected, the hover box will not appear. The attitude indicator and turn rate symbols present on the VSD are replaced by the hover airframe/hover box, velocity vector, and acceleration cue. All other symbols are described in VSD controls/indicators.

INDICATOR	FUNCTION
Acceleration Cue	Indicates helicopter is accelerating in the horizontal plane when the velocity vector is present and the acceleration cue is not at the base of the velocity vector and airframe symbol.
Aircraft Symbol	Represents helicopter location in reference to the hover box and hover display.
Hover Box	Indicates helicopter altitude variation from desired value. The box represents the hover location when selected and the box may move left, right, increase, and/or decrease in size with respect to the aircraft symbol. The box decreases and increases in size with respect to the hover airframe as the aircraft altitude increases and decreases from the selected hover altitude respectively. When the exact hover altitude and location is achieved, the hover box is superimposed over and touches the hover aircraft symbol. The box appears only when radar or barometric altitude hold has be selected.
Hover NRP	Indicates the desired hover location (NRP).
Velocity Vector	Indicates aircraft is accelerating in the direction of the velocity vector. As aircraft velocity increases/ decreases the line will lengthen/ shorten. When the aircraft is stabilized (zero airspeed), the velocity vector will not be displayed.

d. ANVIS Display Symbology System. The ANVIS display symbology system (ADSS) provides flight symbology to be displayed on the pilot's night vision goggles (Figure 3-56). This system enhances the pilots ability to operate during NVG operations. The number and variety of symbols on the ADS are determined by the ADS declutter control page. Activation of the ADS and declutter selection are provided by the FLIR control page. Once the symbology has been predefined for declutter levels 2 and 3, the display symbology can be changed quickly by pressing MFD L1 (ADS DCLT 1, 2, or 3) key on the FLIR control page. Declutter level 1 displays all possible symbols on the night vision goggles. Brightness controls for the pilots ANVIS display symbology are located on the lower console (Figures 2-7 and 4-7). Refer to paragraph 4-38, Aviator Night Vision Imaging System, for more information.

INDICATOR	FUNCTION
Acceleration Cue	Indicates helicopter is accelerating in the horizontal plane when the velocity vector is present and the acceleration cue is not at the base of the velocity vector and airframe symbol.
Aircraft Symbol	The aircraft symbol displays the helicopter attitude with reference to the artificial horizon.
Airspeed	Digital indication of helicopter indicated airspeed. On color MFDs, safe velocities are shown in yellow and velocities at or above Vne are shown in red.

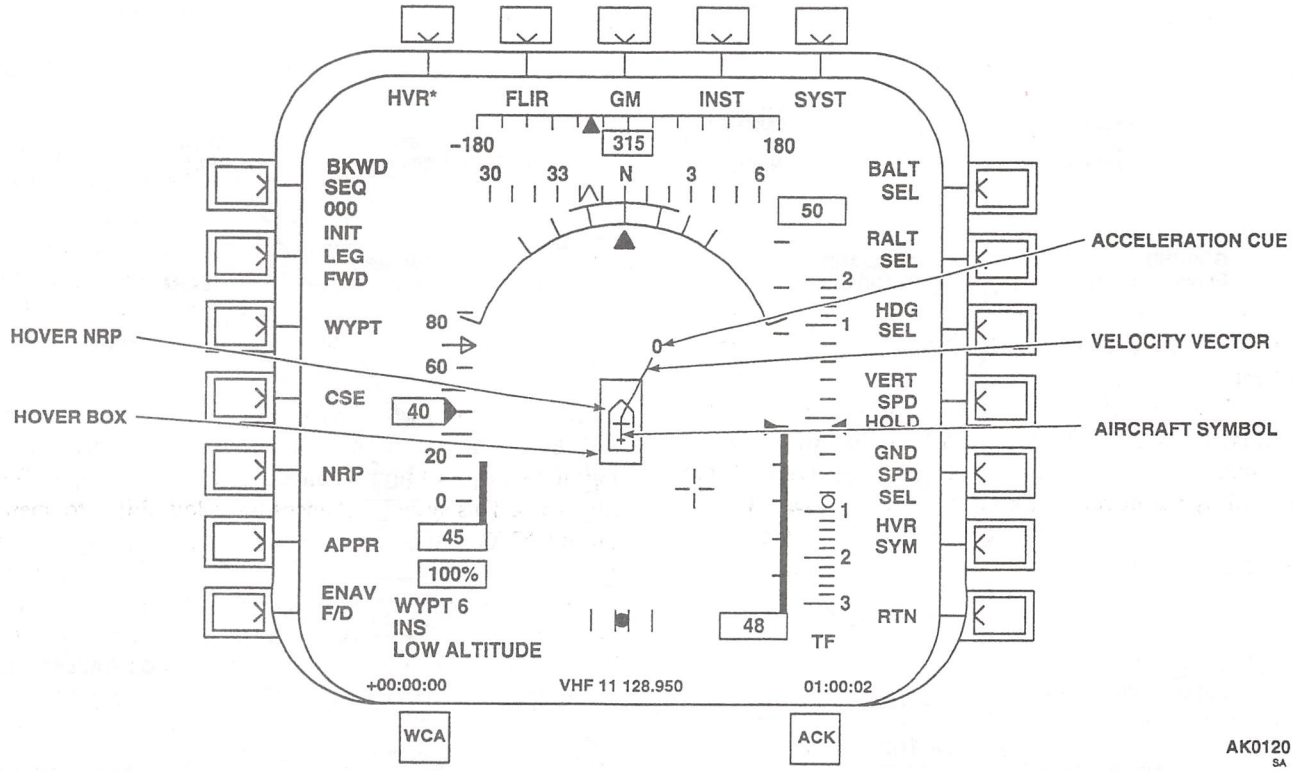

Figure 3-55. MFD Hover Display Symbology

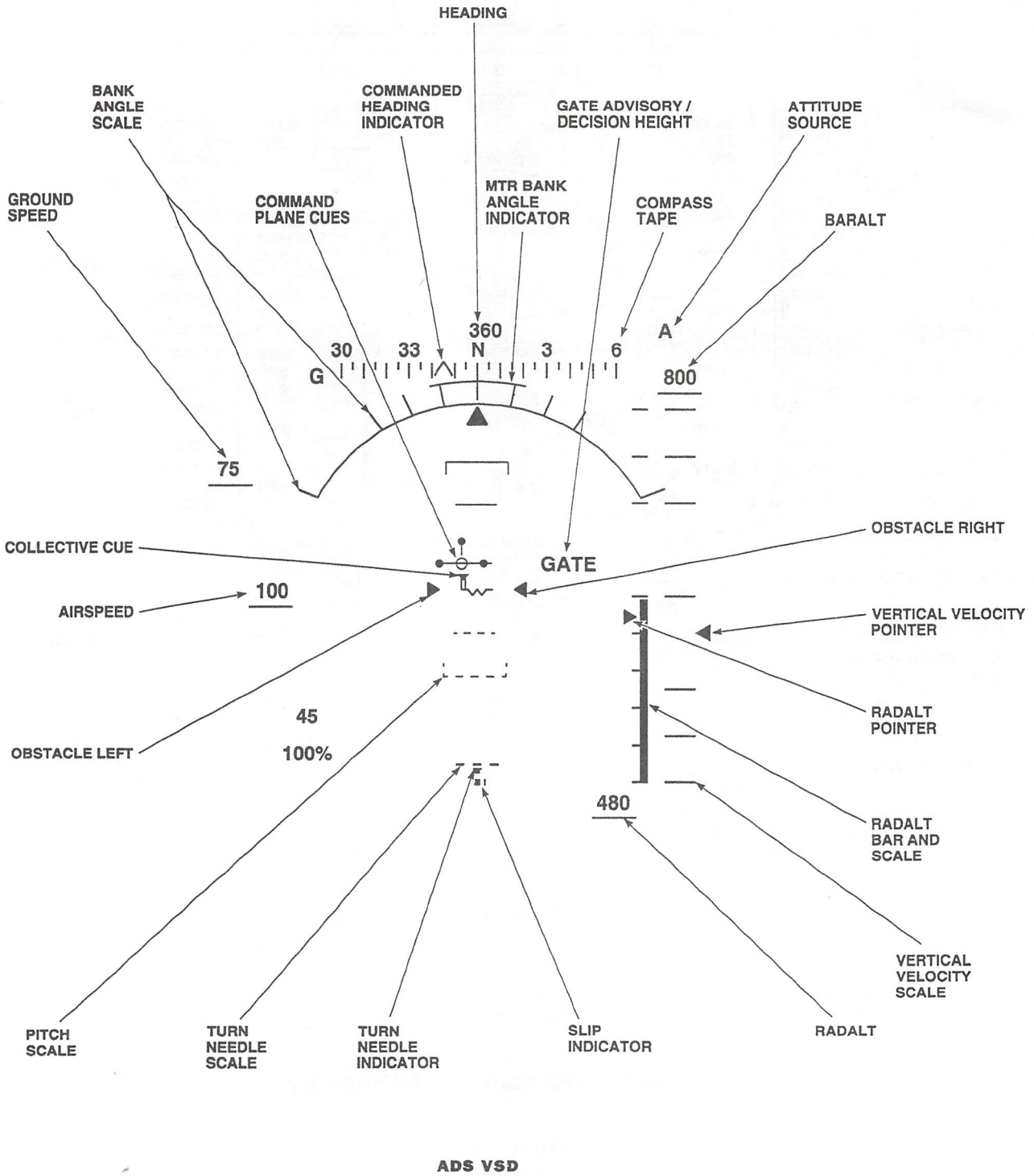

Figure 3-56. ANVIS Display System Symbology (Sheet 1 of 2)

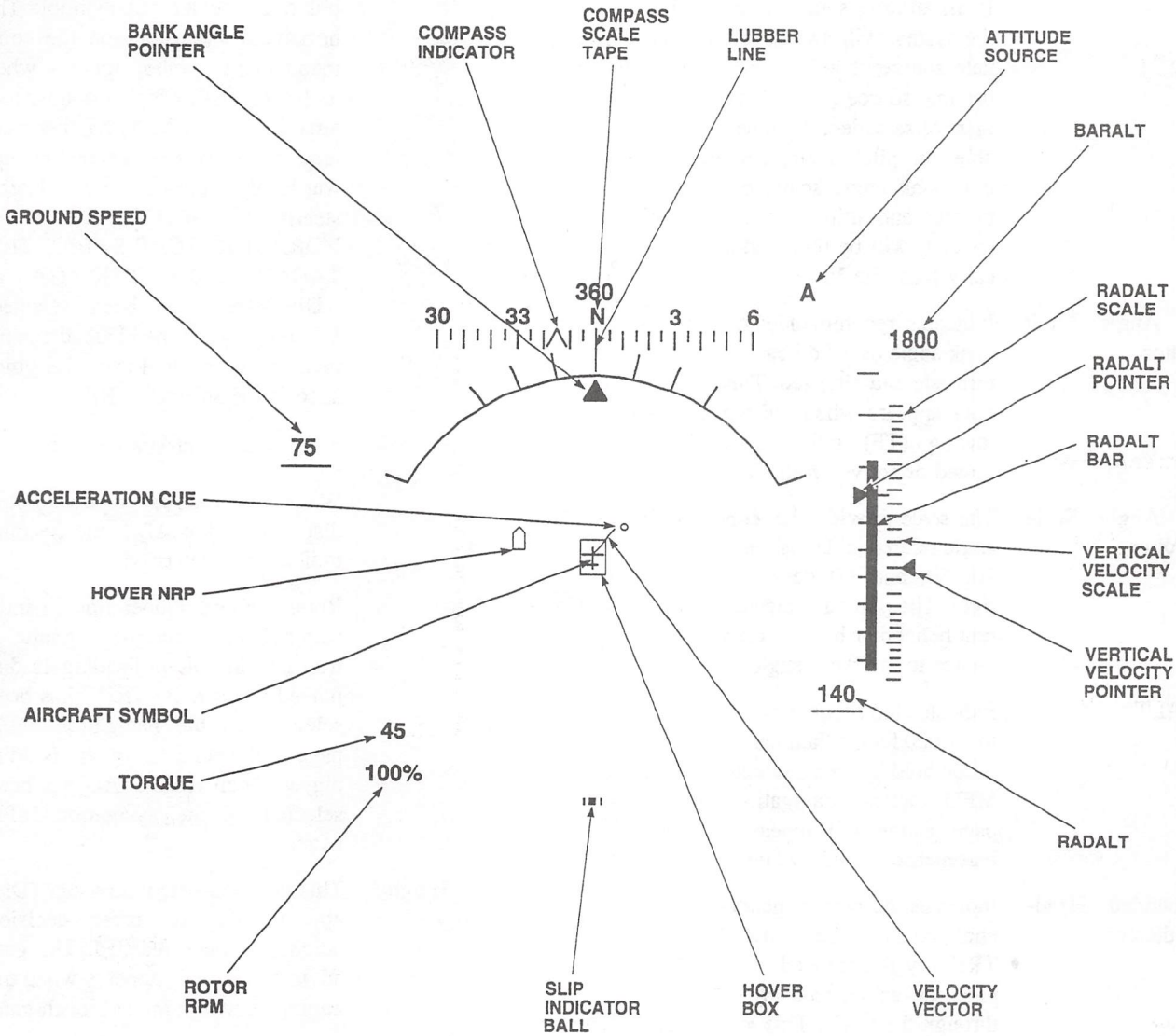

ADS HOVER

AK0991_2
SA

Figure 3-56. ANVIS Display System Symbology (Sheet 2 of 2)

INDICATOR	FUNCTION
Attitude Source	Indicates source of VSD attitude data. An (A) indicates that the attitude source is the AHRS. An (I) indicates that the INU is the source. If an attitude source is unreliable, the system will switch to the alternate source, if available, while the original source (A or I) will appear in reverse video. If none is available, the pitch scale, aircraft symbol, bank angle scale, bank angle pointer, and attitude source symbol (A or I) will be removed automatically from the VSD.
Bank Angle Limit Indicator	Indicates recommended maximum bank angle based on current aircraft turn rate and airspeed. This symbol only appears when the terrain following (TF) guidance mode is armed or active on the VSD page.
Bank Angle Scale and Pointer	The scale provides helicopter bank angle reference. Divisions are at 10, 20, 30, and 60 degrees left and right. The pointer indicates the current helicopter bank angle with reference to the bank angle scale.
BARALT	Indicates the barometric altitude up to 51,000 feet. When barometric altitude hold has been selected on the MFD tactical navigation control page, a line will appear under the barometric altitude value.
Commanded Heading Indicator	Indicates the current heading reference course when HDG-REF or TRK key is activated on the MFD page or as entered by the pilot through the CDU. This symbol appears only when a navigation mode has been selected on an MFD page that provides course or heading data. If the heading required is beyond the limits of the compass scale, one half of the reference heading indicator will be obscured on the side closest to the reference heading.
Command Plane Cue	The command plane indicates the desired flight path. The pilot must move the collective and cyclic as required to superimpose this symbol over the aircraft symbol. The horizontal extensions on the command plane symbol appears when longitudinal steering (groundspeed/airspeed) on an MFD has been selected. The vertical extension, upward only, appears when a lateral steering aid (WYPT, NRP, APPR, VOR, VORTAC, ILS, IBC, PLS, TACAN, TCNP, TRK, GA, or ADF mode) has been selected. When operating the FLIR, the command plane symbol provides guidance to the selected NRP.
	NOTE When the compass tape is being displays on the ADS, the heading indication is removed.
Compass Tape	Rotates above lubber line to indicate helicopter current magnetic or true heading. True heading is displayed when HDG TRUE has been selected on the navigation MFD page. Magnetic heading is displayed when HDG MAG has been selected on the navigation MFD page.
Decision Height/ Gate Advisory	This decision height advisory (DH) appears when the preset decision height has been reached. The gate advisory (GATE) appears when the aircraft is within the approach gate.
Groundspeed	This box contains the groundspeed as determined by the navigation system. If GND SPD SEL is active on the tactical navigation page, a line will appear under the groundspeed value.

INDICATOR	FUNCTION
	NOTE When the heading indication is being displayed on the ADS, the compass tape is removed.
Heading	Displays aircraft heading in degrees.
Hover NRP	Indicates the desired hover location (NRP).
Lubber Line	Reference index for delineating heading, displayed on the compass scale tape.
Obstacle Left/Right Indicators	Obstacle right, and/or left indicators appear, as appropriate, when the MMR detects the presence of an obstacle/hazardous terrain beyond the safety limits of the current flight path. Symbol(s) appear in TF mode only.
Pitch Scale	Indicates current helicopter pitch attitude with reference to the artificial horizon.
RADALT Bar	Indicates the aircraft absolute altitude reference against the radar altimeter scale. The radar altimeter bar, scale, pointer, and readout will not be seen when any of the following conditions exist: the radar altimeter altitude exceeds 1000 feet, the radar altitude is invalid for more than 30 seconds (display will flash for a 30 second period), or the radar altimeter is placed into standby or turned off. The radar altitude symbols will reappear when the radar altitude returns below 1000 feet.
RADALT	Provides a digital indication of helicopter radar altitude (0 to 1500 feet). If RAD SEL is active on the tactical navigation page, a line will appear under the radar altitude value.
RADALT Pointer	Indicates the low altitude alert value as entered by the pilot on the CDU for the RADALT. An altimeter low alert (RALT LOW) will be displayed when the aircraft is at or below this value.
RADALT Scale	Provides reference for RADALT analog bar and RADALT pointer. The bottom of the scale is 0 feet and the top of scale is 1000 feet. The divisions (tick marks) on the radar altimeter scale are fixed at 10, 20, 30, 40, 50, 100, 500, and 1000 feet.
Rotor RPM	Provides digital indication of main rotor rpm (NR).
Slip/Trim Indicator Ball	Indicates the aircraft's sideslip/trim condition.
Torque Box	Provides a digital percent representation of engine torque as an average of both engines, or of the high engine if the low engine is at or below 75% NG, or of a single engine if only one engine is operating.
Turn Needle Scale and Indicator	Indicates helicopter turn direction and rate.
Vertical Velocity Scale and Pointer	Indicates the vertical speed in feet per minute (FPM). Each arabic number is multiplied by 100 (i.e., 1 would be 100 feet per minute).

3-112. Declutter Control Pages.

The symbology on the HSD, VSD, HVR, and ADS displays can be selectively tailored to show flight and navigational aids at three different clutter levels (Figure 3-57). Level 1 is the default level, displaying all of the available symbols and cannot be changed. Levels 2 and 3 can be configured by removing the undesirable symbols listed on the respective declutter control page. The system control page provides access to the declutter control pages. The

MFD key functions on the HSD, VSD, and ADS declutter control pages are very similar; therefore, key functions will apply to all pages except as noted.

NOTE

Do not move the pointer upward past the top item in the declutter list. If the pointer is move upward past the top item in the list, it will wrap to the bottom of the list. If the bottom item is selected, you may get an erroneous symbol on your display. This does not happen when the pointer is moved downward through the declutter list.

KEY/LEGEND	FUNCTION
	MFD Page
L1 (SEQ▲)	Press to move pointer up adjacent to desired symbol for adding to or removing from a declutter level.
L2 (SYM▼)	Press to move pointer down adjacent to desired symbol for adding to or removing from a declutter level.
	NOTE After both MPs are loaded with new software at the same time or graceful degradation causes the MP to reinitialize to the initial program load state, the first time data is uploaded from the DTMs to the MPs, the ADSS declutter RSET LVL2 and RSET LVL3 keys must be reset.
L4 (SET LVL2)	Press to reset all HSD, VSD, or ADS symbols on declutter level 2 to ON.
L5 (SET LVL3)	Press to reset all HSD, VSD, or ADS symbols on declutter level 3 to ON.
R1 (LVL2 CTRL)	Press to turn on/off the symbol adjacent to the pointer for declutter level 2.
R2 (LVL3 CTRL)	Press to turn on/off the symbol adjacent to the pointer for declutter level 3.
R6 (HSD or VSD DCLT)	Press to access VSD or HSD declutter control page.
R7 (ADS or HSD DCLT)	Press to access ADS or HSD declutter control page.
L3, L6, L7, and R3 thru R5	Not used.

3-113. Navigation Reference Points.

NRPs mark the locations of the point of departure, threat locations, landmarks, friendly locations, destination, and any key point of interest in which a grid coordinate can be substituted. NRPs may be entered or stored in either LAT/LONG or UTM, depending on the coordinate system selected on the MFD NRP table pages (Figure 3-58). Up to 100 NRPs may be stored in the NRP table. NRPs 1-94 are used for fixed locations; NRP 95 is reserved for PLS locations and NRPs 96-100 may be used for either fixed or moving locations. (Selecting HVR REF STR stores present position coordinates in NRP 94.) NRPs are normally assembled as part of the preflight mission plan and entered into the mission processor using the DTM. NRPs may also be entered individually in one of the following ways: by manually entering the NRPs into the NRP table, performing a flyover NRP store, or performing a sensor NRP store. The MFD NRP table display pages can be reached from the MFD system page by pressing MFD R1 (NRP) key. A list of NRPs with coordinates either in LAT/LONG or UTM will appear in the MFD, depending on which type of coordinates were last in use. These MFD pages and their associated CDU pages allow modification or addition of any of the listed data.

3-114. MFD and CDU NRP Table Control Pages.

The MFD NRP table pages allow entering NRP locations as UTM or LAT/LONG coordinates (Figure 3-58). The present coordinates system being used will determine which type of page is displayed. To change the type coordinates being displayed, the pilot must use the navigation initialization or navigation display page. NRPs 96 through 100 will display STRT instead of MASTER on the line for the NRP data on the MFD display.

KEY/LEGEND	FUNCTION
	MFD Page (UTM or LAT/LONG)
L1 (SEQ▲)	Press to move arrow up the page.

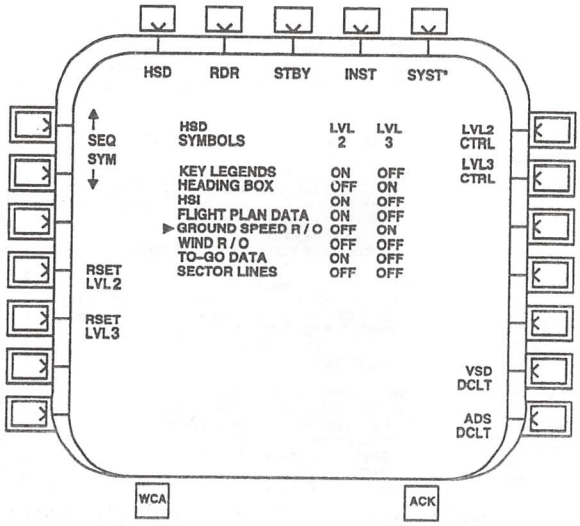

HSD PAGE

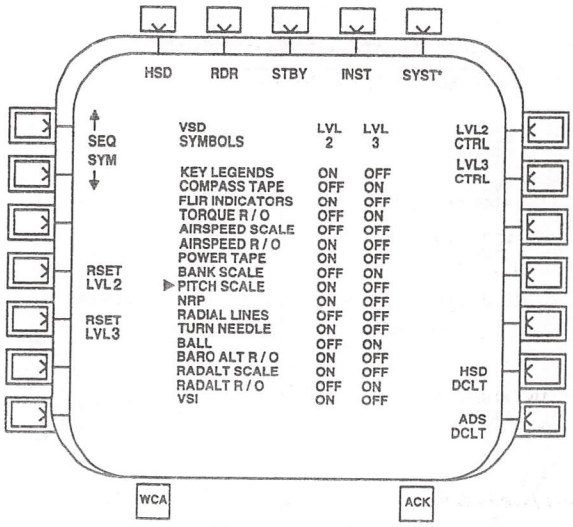

VSD PAGE

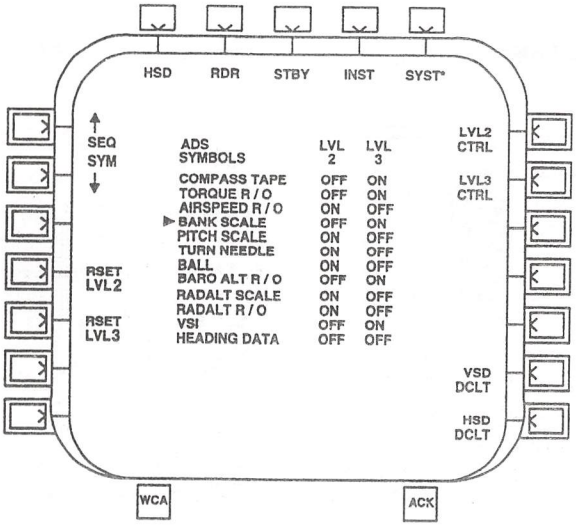

ADS PAGE

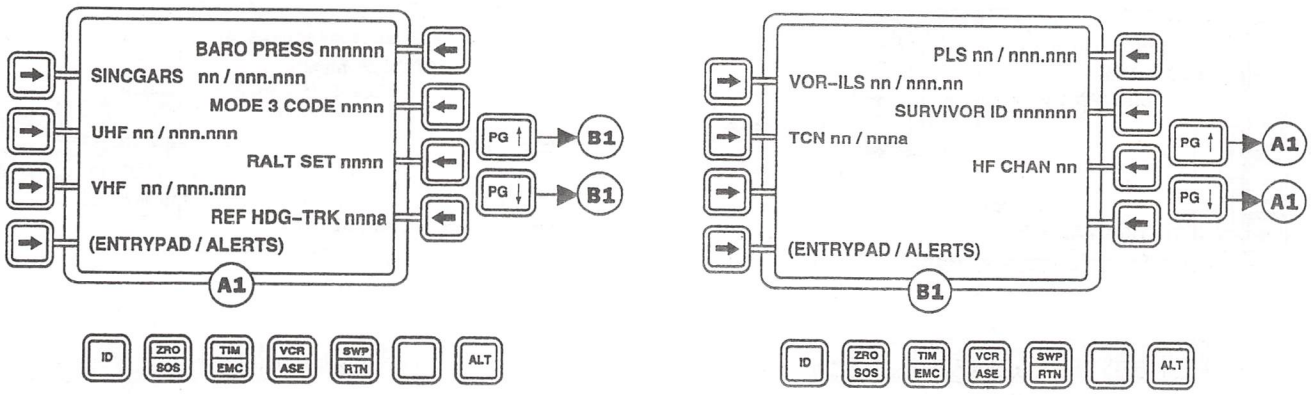

CDU DEFAULT PAGES

AK0122
3A

Figure 3-57. MFD HSD, VSD, and ADS Declutter Pages

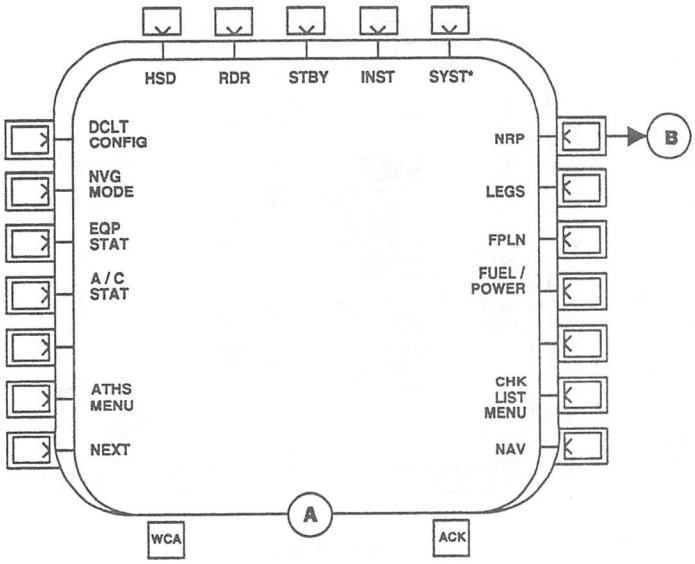

SYSTEM CONTROL PAGE

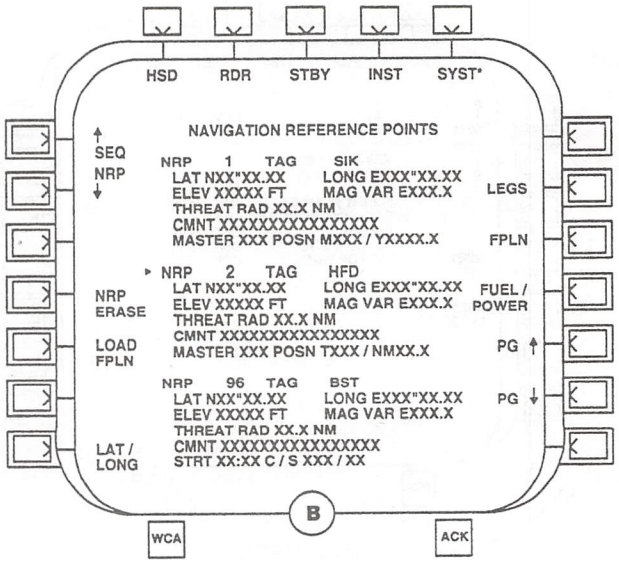

NRP TABLE IN LAT/LONG

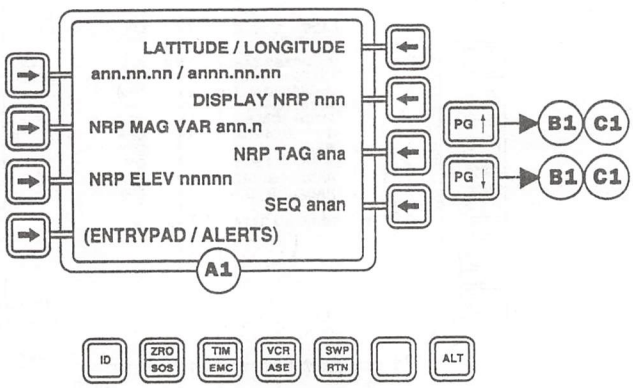

CDU NRP PAGES FOR LAT/LONG

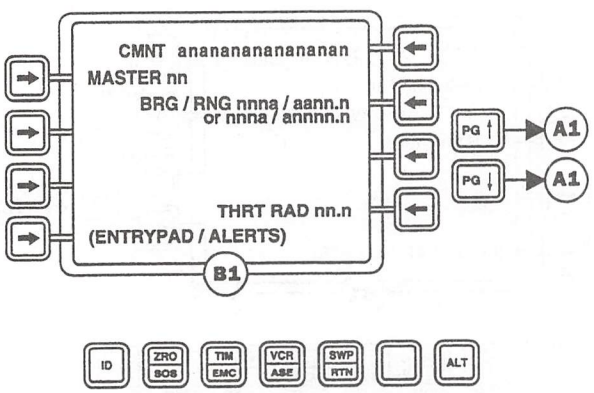

DISPLAYED FOR NRP #95 OR BELOW

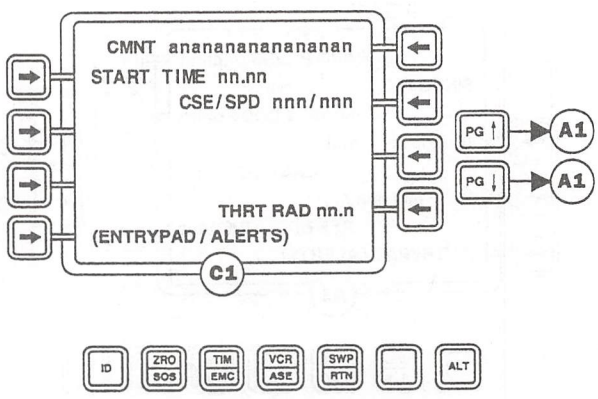

DISPLAYED FOR NRP #96 OR ABOVE

AK0223_1
SA

Figure 3-58. MFD and CDU NRP Table Pages (Sheet 1 of 2)

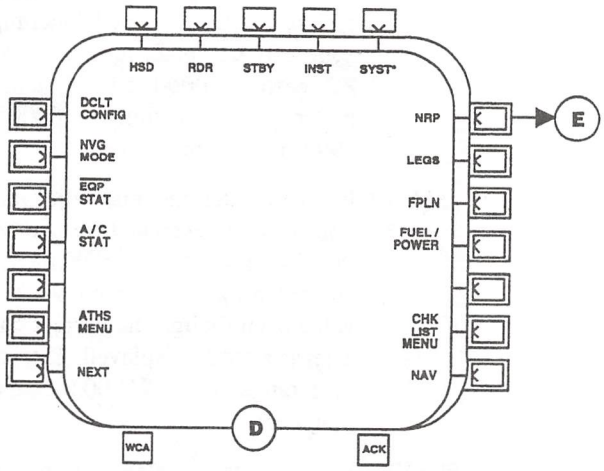

SYSTEM CONTROL PAGE

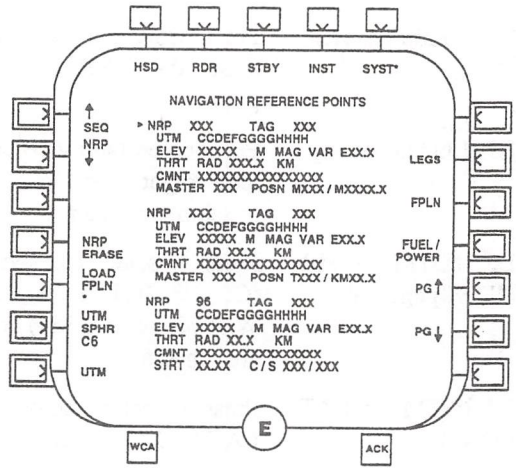

NRP TABLE IN UTM

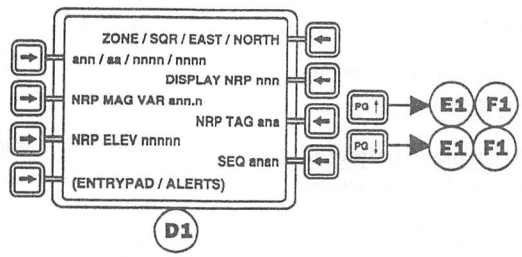

CDU NRP PAGES FOR UTM

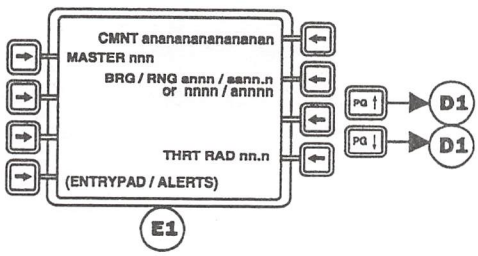

DISPLAYED FOR NRP #95 OR BELOW

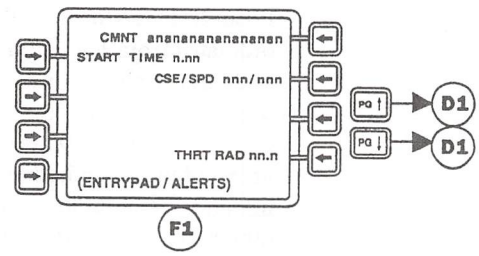

DISPLAYED FOR NRP #96 OR ABOVE

AK0223_2
SA

Figure 3-58. MFD and CDU NRP Table Pages (Sheet 2 of 2)

KEY/LEGEND	FUNCTION
L2 (NRP▼)	Press to move arrow down the page.
L4 (NRP ERASE)	Press twice (software protected) to erase the NRP adjacent to the pointer.
L5 (LOAD FPLN)	Press twice (software protected) to load flight plan from DTM into mission computer.
L6 (UTM SPHR) (UTM page only)	Press to select the spheroid value (C6, C8, INT, EVE, BES, AUST, WGS72, or WGS84) for the earth area in use.
L7 (UTM or LAT/ LONG)	Press to select between UTM or LAT/LONG for display of coordinates.
R2 (LEGS)	Press to access the flight plan leg pages.
R3 (FPLN)	Press to access the flight plan summary pages.
R4 (FUEL/POWER)	Press to access the fuel and power summary page.
R5 (PG▲)	Press to display the previous MFD page in a multipage tabular display.
R6 (PG▼)	Press get display the next MFD page in a multipage tabular display.
L3, R1, and R7	Not used, also, L6 is not used on LAT/LONG page.
	CDU Page 1 (LAT/LONG and UTM)
L1 key (LAT/LONG page)	Press to enter the LAT/LONG coordinates from the entrypad for use with the assigned NRP. Entrypad data range: latitude - N or S, 00.00.00 to 90.00.00 (degrees.minutes.hundredths of a minute); longitude - E or W, 000.00.00 to 180.00.00 (degrees.minutes.hundredths of a minute).
L1 key (UTM page)	Press to enter the UTM coordinates from the entrypad for use with the assigned NRP. Entrypad data range: zone - 01A to 60Z; square - AA to ZZ; easting - 0000 to 9999 (tens of meters); and northing - 0000 to 9999 (tens of meters).
L2 (NRP MAG VAR)	Press to enter the magnetic variation from the entrypad for use with the NRP location. E or W must be entered prior to entering variation value even though the correct character is already displayed. Entrypad data range: E or W, 00.0 to 90.0 (degrees).
L3 (NRP ELEV) (LAT/LONG page)	Press to enter the elevation from the entrypad for the NRP location. Entrypad data range: -5000 to 30000 (feet).
L3 (NRP ELEV) (UTM page)	Press to enter the elevation from the entrypad for the NRP location. Entrypad data range: -1524 to 9100 (meters).
L4 (Entrypad/Alerts)	Standard CDU default pages line key. Refer to paragraph 3-45, CDU Default Pages, for more details.
R1 (LATITUDE/ LONGITUDE) (LAT/LONG page)	Label for L1 key entry.
R1 (ZONE/SQR/ EAST/NORTH) (UTM page)	Label for L1 key entry.

KEY/LEGEND	FUNCTION
R2 (DISPLAY NRP)	Press to enter the NRP number from the entrypad to be assigned to the NRP data being entered into the CDU. Data entry range: 1 to 100. (Enter a number from 96 through 100 if the NRP is expected to be moving. This will display the appropriate CDU page 2 for entering moving parameters for a moving NRP. System time must be manually entered or GPS time must be available before entering moving NRP information.)
R3 (NRP TAG)	Press to enter the three character identifier from the entrypad to be used with the NRP. Entrypad data range: maximum of 3 alphanumeric characters.
R4 (SEQ AUTO or MAN)	Press to select between automatic (AUTO) or manual (MAN) for leg sequencing as leg data is modified. Selections Available: AUTO or MAN.
	CDU Page 2 (LAT/LONG or UTM for NRPs numbered 95 or below)
L1 (MASTER)	Press to enter master NRP number from entrypad for use with this NRP. Master NRPs are normally key landmarks used as NRPs. Entrypad data range: 0 to 95.
L4 (Entrypad/Alerts)	Standard CDU default pages line key. Refer to paragraph 3-45, CDU Default Pages, for more details.
R1 (CMNT)	Press to enter a descriptive comment from the entrypad for the NRP. Data entry range: maximum of 16 alphanumeric characters.
R2 (BRG/RNG) (LAT/LONG page)	Press to enter the bearing and range from the entrypad to the master NRP from this NRP. Data entry range: 000M (magnetic) to 360M or 000T to 360T (true); and Y0 to Y9999.9 (yards) or NM0 to NM99.9 (nautical miles).

KEY/LEGEND	FUNCTION
R2 (BRG/RNG) (UTM page)	Press to enter the bearing and range from the entrypad to the master NRP from this NRP. Data entry range: BRG - 000M (magnetic) to 360M or 000T to 360T (true); and RNG - M0 to M9144 (meters) or K0 to K161 (kilometers).
	NOTE
	If a THRT RAD circle range exceeds the MFD selected range limit, the threat circle will not be displayed properly.
R4 (THRT RAD) (LAT/LONG page)	Press to enter the treat/avoidance radius value from the entrypad. Entrypad data range: 0 to 99.9 (nautical miles). Depending on the range selected on the MFD, the THRT RAD is currently limited as follows: HSD centered (MFD Range nm/THRT RAD limit) - 1/1.5, 3/4.5, 5/7.5, 10/15, 15/22.5, 30/45, and 45/67.5; HSD decentered (MFD Range nm/THRT RAD limit) - 1/0.8, 3/3.5, 5/4.1, 10/8.2, 15/12.3, 30/24.6, and 45/37.
R4 (THRT RAD) (UTM page)	Press to enter the treat/avoidance radius value from the entrypad. Entrypad data range: 0 to 185.0 (kilometers). Note - Convert THRT RAD limit under LAT/LONG to kilometers by multiplying TRHT RAD by 1.609.
L2, L3, and R3	Not used.
	CDU Page 2 (LAT/LONG or UTM for NRPs numbered 96 or above)
L1 (START TIME)	Press to enter a start time from the entrypad for the moving NRP. Entrypad data range: 0.00 to 23.59 (hours.minutes) The start time of an NRP must be within ±12 hours of the current system time.

KEY/LEGEND	FUNCTION
	NOTE When the system time and the NRP start time are exactly 12 hours apart, a moving NRP will not move from its starting location. Therefore, when the start time is exactly 12 hours different from system time, 1 minute should be added or substracted from the start time.
L4 (Entrypad/Alerts)	Standard CDU default pages line key. Refer to paragraph 3-45, CDU Default Pages, for more details.
R1 (CMNT)	Press to enter a descriptive comment from the entrypad for the NRP. Data entry range: maximum of 16 alphanumeric characters.
R2 (CSE/SPD)	Press to enter the course and speed from the entrypad for the moving NRP. Data entry range: CSE - 000 to 360 (degrees); and SPD - 000 to 999 (knots).
	NOTE If a THRT RAD circle range exceeds the MFD selected range limit, the threat circle will not be displayed properly.
R4 (THRT RAD) (LAT/LONG page)	Press to enter the treat/avoidance radius value from the entrypad. Entrypad data range: 0 to 99.9 (nautical miles). Depending on the range selected on the MFD, the THRT RAD is currently limited as follows: HSD centered (MFD Range nm/THRT RAD limit) - 1/1.5, 3/4.5, 5/7.5, 10/15, 15/22.5, 30/45, and 45/67.5; HSD decentered (MFD Range nm/THRT RAD limit) - 1/0.8, 3/3.5, 5/4.1, 10/8.2, 15/12.3, 30/24.6, and 45/37.
R4 (THRT RAD) (UTM page)	Press to enter the treat/avoidance radius value from the entrypad. Entrypad data range: 0 to 185.0 (kilometers). Note - Convert THRT RAD limit under LAT/LONG to kilometers by multiplying TRHT RAD by 1.609.
L2, L3, and R3	Not used.

3-115. NRP Table Entry and Modifications.

1. Press key MFD T5 (SYST) key to display the system page.
2. Press key MFD R1 (NRP) key to access the NRP Table page. An NRP table appears showing NRPs with either LAT/LONG or UTM coordinates, depending upon which type coordinate system is being used. To change between LAT/LONG or UTM coordinates, go to the navigation initialization or display page.

NOTE

Moving NRPs must have a number from 96 to 100.

3. To add an NRP to the NRP table, perform the following:
   a. Press MFD R6 (PG▼) and/or L2 (LEG▼) key to move pointer to the next available NRP.
   b. Enter new NRP data into the CDU for each field in which information is available.
   c. Press CDU ENT key to add the CDU enter data into NRP fields on the MFD page. If a field fails to transfer into the MFD NRP page, reenter the data into the CDU entrypad, then press the associated CDU line key, then press CDU ENT key. (Information that is correct from a previous entry must be reenter via the entrypad before it is accepted for a new NRP, if not entered via the entrypad the data will not transfer to the MFD NRP page.)
4. To modify an existing NRP, perform the following:
   a. Enter the NRP number into the CDU under R2 (DISPLAY NRP), or press MFD R5 (PG▲) or R6 (PG▼) and/or L1 (SEQ▲) or L2 (NRP▼) key to display the data of the NRP to be modified.
   b. Enter the new data into the CDU for those fields requiring changes.

c. Press CDU ENT key to add the modified NRP data into NRP fields on the MFD NRP page.

5. To load original DTM flight plan, press MFD R1 (LOAD FPLN) key with DTM installed.

3-116. Flight Plan.

Flight plan data is commonly assembled as part of the preflight mission plan and loaded into the mission processor using the DTM. Once loaded, flight plan data can be reviewed, modified, or added by using the MFD and CDU flight plan summary and leg pages. NRPs from the NRP table are assigned on the flight plan summary page to make up a flight plan.

3-117. MFD and CDU Flight Plan Pages.

These pages allow building or modifying a flight plan. Access to these pages is provided by the system control page. Refer to system control page if required.

a. Flight Plan Summary Page. These pages allow adding to, deleting from, erasing, and turning on/off the flight plan (Figure 3-59). A flight plan is comprised of NRPs from the NRP table. A flight plan can contain up to 100 legs. When building a flight plan, use the MFD LEG ADD key to add CDU data regarding the leg number into the flight plan.

KEY/LEGEND	FUNCTION
	MFD Page
L1 (BKWD SEQ)	Press to decrement the current leg number. Guidance will be provided from the aircraft present position to the destination NRP of the selected leg. Selected leg number is displayed next to L1 key and type of leg is displayed next to L2 key. (Leg type: INIT, HVR, LAND, APPR, CRS, STOP, and T/F.)
L2 (INIT LEG FWD)	Press to increment the current leg number. Guidance will be provided from the aircraft present position to the destination NRP of the selected leg. Selected leg number is displayed next to L1 key and type of leg is displayed next to L2 key. (Leg type: INIT, HVR, LAND, APPR, CRS, STOP, and T/F.)
L3 (FPLN ON/OFF)	Press to toggle flight plan on/off. Also resets current leg to 1.
L4 (FPLN ALRT)	Press to update and display any flight plan associated alerts that have been acknowledged and are still in effect.
L5 (SEQ▲)	Press to sequence pointer, backward through the legs list, adjacent to desired leg for operation action.
L6 (LEG▼)	Press to sequence pointer, forward through the legs list, adjacent to desired leg for operation action.
	NOTE If a flight leg is added between two cruise, two approach, or two TF legs, the leg type will default to HVR so that the flight plan is continuous. (If the leg type is change to INIT, the ETE will already have defaulted to 00:05:00 as required for a hover leg. The pilot must change the ETE to 00:00:00 as required.)
L7 (LEG ADD)	Press to add CDU leg information as a new leg.
R1 (NRP)	Press to access the NRP table pages.
R2 (LEGS)	Press to access the flight plan leg pages.
R3 (DELTA)	Press to activate delta function for the flight plan leg(s) (DELTA TO/FROM) entered into the CDU. If the pilot is on a leg of the flight plan and needs to change the ETA of a leg in the flight plan, there are several options that the pilot can perform to update the existing flight plan.

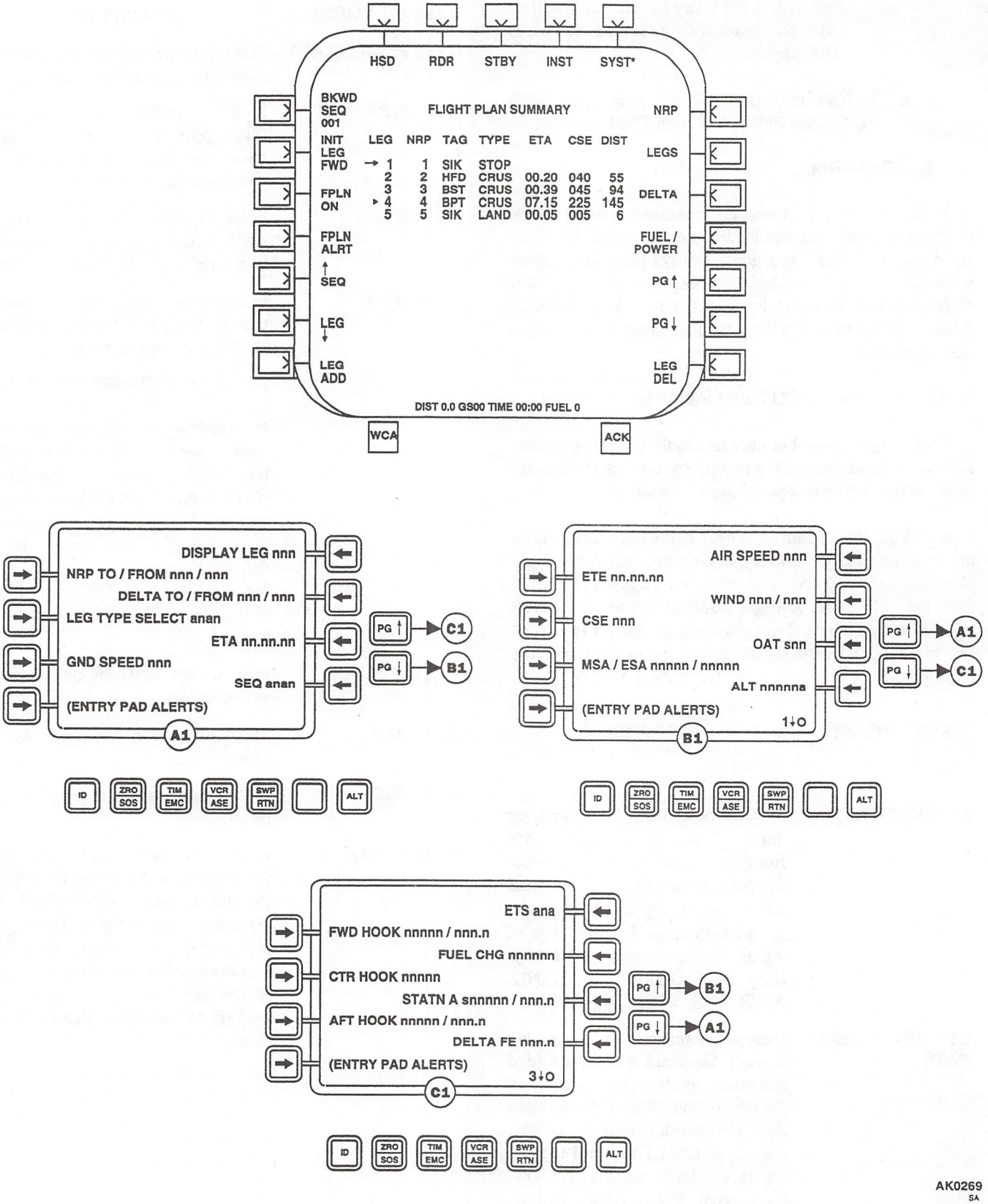

Figure 3-59. MFD and CDU Flight Plan Summary Pages

KEY/LEGEND	FUNCTION
	First, the pilot may elect to enter the new ETA for the selected leg. If the pilot modifies the flight plan ETA for the selected leg, the airspeed and goundspeed required from the source and destination NRPs of the selected leg is recalculated. If no inverse video appears for that leg, the pilot can continue flying the existing flight plan route with the expected change in airspeed on the selected leg to meet its new ETA. If the new ETA causes that leg to display inverse video on the flight plan summary page and generates an EXCESS SPD RQD advisory message (i.e., because the airspeed required to reach the destination NRP of the selected leg is to high), the pilot can choose the delta function to recalculate the flight plan from the present position (0 entered as DELTA FROM leg) or any leg prior to the selected leg. If an EXCESS SPD RQD advisory message is displayed when a zero (0) is entered as the DELTA FROM NRP to the DELTA TO leg, the pilot must alter the flight plan to a more direct route to make the new ETA, if possible. Pressing the MFD R3 (DELTA) key will display groundspeed, distance, time, and fuel on the operator information line from the source NRP to the destination NRP of the DELTA TO leg. Delta information will be displayed for 10 seconds, pressing the DELTA key again while the information is being displayed will cause the computer to modify the flight plan to meet the new ETA.
R4 (FUEL/POWER)	Press to access the fuel and power summary page.
R5 (PG▲)	Press to display the previous page in a multipage tabular display.
R6 (PG▼)	Press to display the next page in a multipage tabular display.
R7 (LEG DEL)	Press to delete the leg adjacent to the MFD pointer from the flight plan.
	CDU Page 1
L1 (NRP TO/FROM)	Press to enter the NRP destination/source (TO/FROM) numbers from the entrypad for a flight plan leg. Entrypad data range: 0 to 100/0 to 100.
	NOTE A segment of the symbols representing the flight plan legs on an MFD will not be displayed whenever an INIT, STOP, LAND, or HVR leg is entered and it has the same NRP number for the TO/FROM values adjacent to L1 key.
L2 (LEG TYPE SELECT INIT, STOP, LAND, APPR, CRS, T/F, or HVR)	Press to select the type leg. Toggles between: INIT (initial), STOP, LAND, and HVR (hover) or between T/F (terrain following), CRS (cruise), and APPR (approach). When TO/FROM NRPs have the same NRP number, L2 key toggles between INIT, STOP, LAND, and HVR. When the TO/FROM NRPs have different NRP numbers, L2 key toggles between T/F, CRS, and APPR.
	NOTE If the groundspeed of the previous leg is zero (0), the groundspeed of an added leg defaults to 120 knots. However, if the groundspeed of the previous leg is greater than zero (0), the groundspeed of an added leg defaults to the groundspeed value in the previous leg.
L3 (GND SPEED)	Press to enter the desired groundspeed from the entrypad for the flight plan leg. Entrypad data range: 0 to 200 knots. (ETA, ETE, and airspeed will be calculated.)

KEY/LEGEND	FUNCTION
L4 (Entrypad/Alerts)	Standard CDU default pages line key. Refer to paragraph 3-45, CDU Default Pages, for more details.
R1 (DISPLAY LEG)	Press to enter the flight plan leg number from the entrypad to be assigned to the leg. Data entry range: 0 to 99.
R2 (DELTA TO/ FROM)	Press to enter the flight plan leg number of the TO/FROM legs to be used for delta calculations. Delta calculations are made using the delta destination NRP number (TO) and the delta source NRP number (FROM).
R3 (ETA)	Press to enter ETA from the entrypad for the arrival time to the destination NRP on the flight plan leg. Entrypad data range: 00.00.00 to 24.00.00 (hours.minutes.seconds). (Airspeed, ETE, and groundspeed will be calculated.)
R4 (SEQ AUTO or MAN)	Press to select between automatic (AUTO) or manual (MAN) for leg sequencing as leg data is modified. Selections Available: AUTO or MAN.
	CDU Page 2
L1 (ETE)	Press to enter ETE from the entrypad for the enroute time to the destination NRP on the flight plan leg. Entrypad data range: 00.00.00 to 12.00.00 (hours.minutes.seconds). When LEG TYPE SELECT is HVR, STOP, or LAND, ETE defaults to 00.05.00; when LEG TYPE SELECT is INIT, ETE defaults to 00.00.00. (Airspeed, ETA, and groundspeed will be calculated.)
	NOTE
	If an INIT leg is changed to another type leg, its ETE remains at the default value of 00.00.00 and must be changed as required.

KEY/LEGEND	FUNCTION
L2 (CSE)	Press to enter the course from the entrypad for the distination NRP. The final course to the destination NRP will be flown using this data. Entrypad data range: 0 to 360 degrees.
L3 (MSA/ESA)	Press to enter the minimum safe altitude (MSA) and the emergency safe altitude (ESA) for the flight plan leg. Entrypad data range: MSA - 0 to 15000 feet; and ESA - 0 to 15000 feet.
L4 (Entrypad/Alerts)	Standard CDU default pages line key. Refer to paragraph 3-45, CDU Default Pages, for more details.
R1 (AIR SPEED)	Press to enter the airspeed to be flown from the entrypad for the flight plan leg. Entrypad data range: 0 to 200 knots. (ETA, ETE, and groundspeed will be automatically calculated.)
R2 (WIND)	Press to enter wind value from the entrypad of the expected wind for the flight plan leg. Winds will be automatically updated by the air data system when the aircraft is actually flying the leg. Entrypad data range: direction - 000 to 360 degrees; and speed - 0 to 200 knots (default is previous wind speed value).
R3 (OAT)	Press to enter the outside air temperature value from the entrypad of the expected temperature for the flight plan leg altitude. Temperature will be automatically updated when the aircraft is actually flying the leg. Entrypad data range: -99 to 99 degrees Celsius (default is previous Celsius value).
	NOTE
	An MSL altitude cannot be entered for a hover leg.

KEY/LEGEND	FUNCTION
R4 (ALT)	Press to enter the altitude from the entrypad for the flight plan leg. Entrypad data range: 0 to 1500A feet (above ground level when radar altimeter hold is selected); or 0 to 15000M feet (reference to mean sea level when barometric altimeter hold is selected) (default is previous altitude value).
	CDU Page 3
L1 (FWD HOOK)	Not used.
L2 (CTR HOOK)	Press to enter the weight from the entrypad that is attached to the cargo hook during the flight plan leg. Entrypad data range: 0 to 25000 pounds, maximum cargo hook weight is 8000 pounds.
L3 (AFT HOOK)	Not used.
L4 (Entrypad/Alerts)	Standard CDU default pages line key. Refer to paragraph 3-45, CDU Default Pages, for more details.
R1 (ETS ON or OFF)	Press to select ON (installed) or OFF (not installed) for external tank system (ETS). Selection available: ON or OFF.
R2 (FUEL CHG)	Press to enter the fuel weight value from the entrypad for any fuel changes on the flight plan leg. Entrypad data range: -16384 to 16384 pounds.
R3 (STATN A)	Press to enter the fuselage station, weight, and fuselage arm values from the entrypad for any weight changes within zone A for the flight plan leg. Entrypad data range: fuselage station - A through H; weight - -5000 to 5000 pounds; fuselage arm - 0 to 762.6 inches.
R4 (DELTA FE)	Press to enter the effective flat plate area change value from the entrypad for use with the flight plan leg. See External Drag Load Table and Cruise Charts in Chapter 7. Entrypad data range: -99.9 to 999.9 square feet.

b. Flight Plan Leg Page. This page allows updating and adding to the initial information entered onto the flight plan summary page (Figure 3-60). Weight and load changes are available for all leg entries which enhance the accuracy of the performance data and fuel usage calculations. Loading zones used in IASS calculations are slightly different from those in Chapter 6, requiring attention to detail to use the correct method. When applying weight/load changes for IASS calculations, do not use Chapter 6 zone locations, use the zone locations in Figure 3-61. Internal fuel tank weights must be entered in the zones F, G, and H.

KEY/LEGEND	FUNCTION
	MFD Page
L1 (BKWD SEQ)	Press to decrement the current leg number. Guidance will be provided from the aircraft present position to the destination NRP of the selected leg. Selected leg number is displayed next to L1 key and type of leg is displayed next to L2 key. (Leg type: INIT, HVR, LAND, APPR, CRS, STOP, and T/F.)
L2 (INIT LEG FWD)	Press to increment the current leg number. Guidance will be provided from the aircraft present position to the destination NRP of the selected leg. Selected leg number is displayed next to L1 key and type of leg is displayed next to L2 key. (Leg type: INIT, HVR, LAND, APPR, CRS, STOP, and T/F.)
L3 (FPLN ON/OFF)	Press to toggle flight plan on/off. Also resets current leg to 1.
L4 (FPLN ALRT)	Press to update and display any flight plan associated alerts that have been acknowledged and are still in effect.
L5 (SEQ▲)	Press to sequence pointer, backward through the legs list, adjacent to desired leg for operation action.
L6 (LEG▼)	Press to sequence pointer, forward through the legs list, adjacent to desired leg for operation action.
L7 (LEG ADD)	Press to add CDU leg information as a new leg.

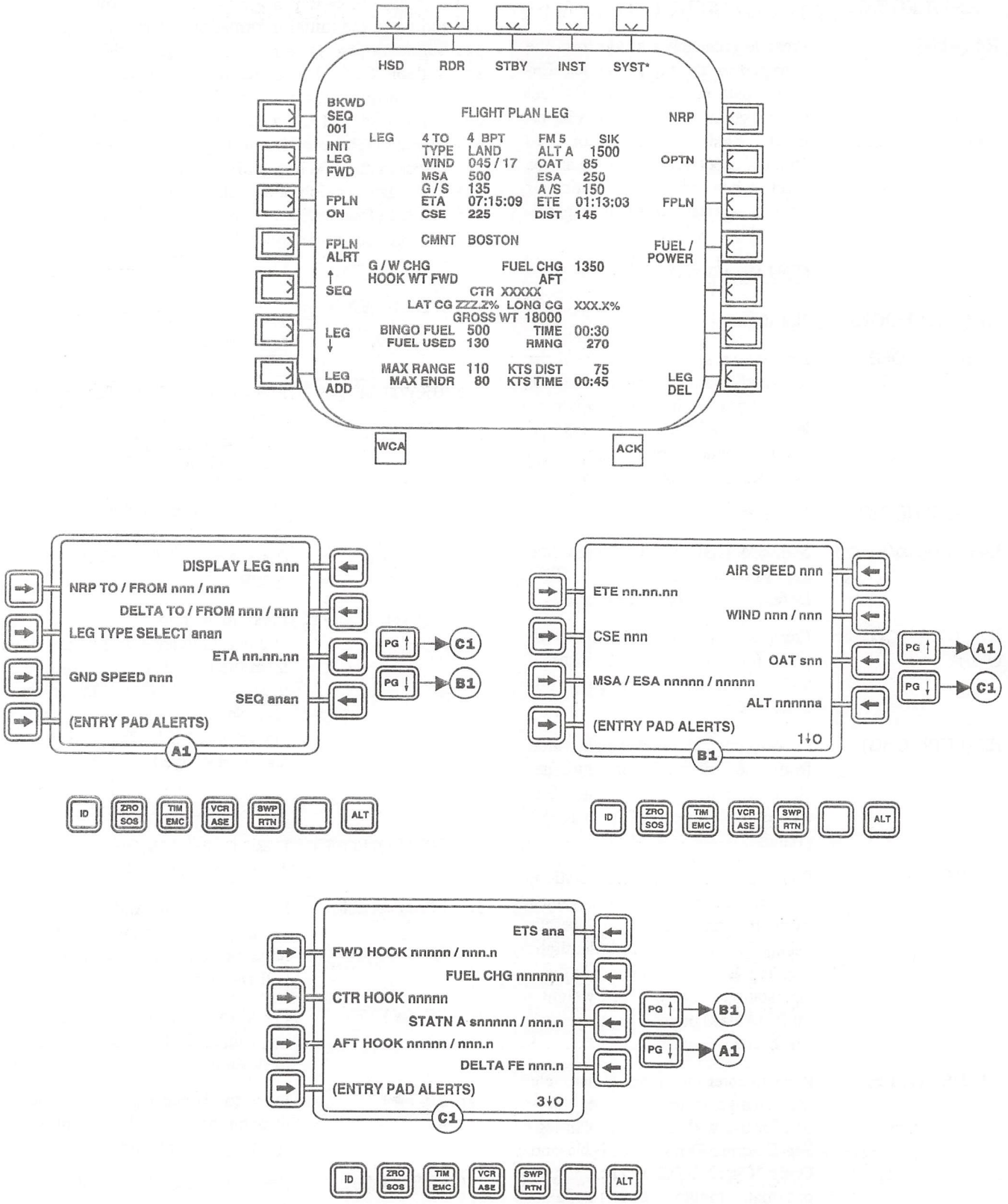

AK0224
SA

Figure 3-60. MFD and CDU Flight Plan Leg Pages

IASS WEIGHT AND BALANCE IMPLEMENTATION

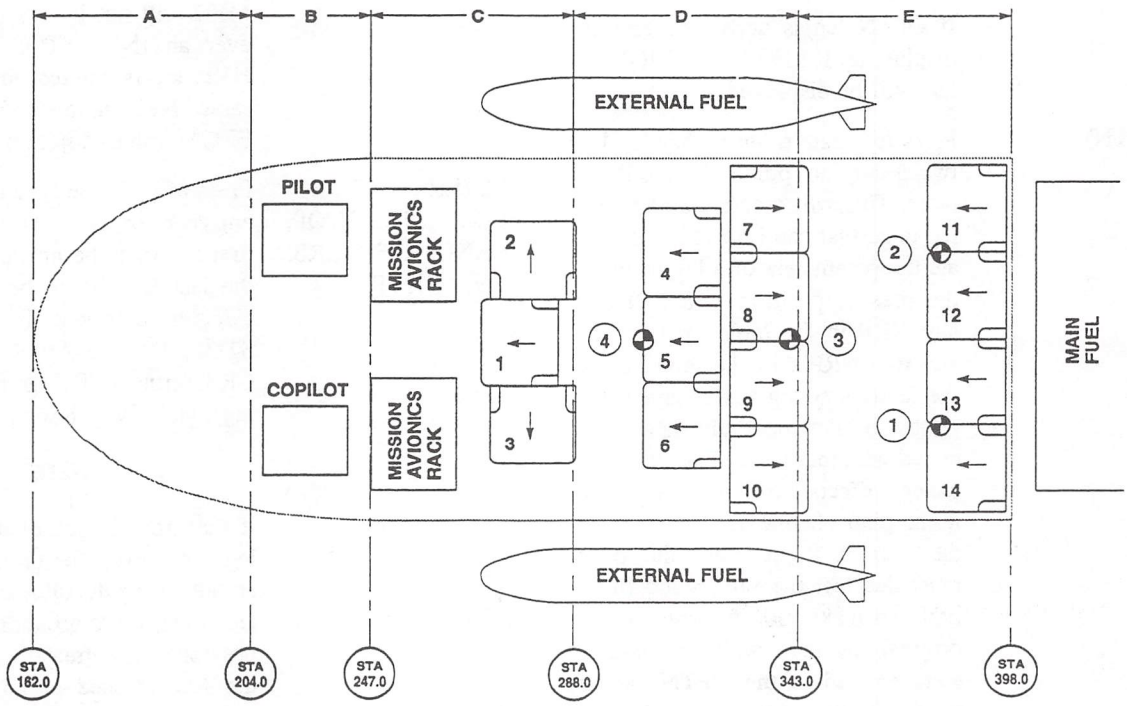

ITEM / ZONE	IASS ZONE DEFAULTS	DEFAULT ITEMS
ZONE A	STA 183.0	EQUIPMENT
ZONE B	STA 227.1	PILOTS
ZONE C	STA 283.5	SEATS 2 & 3
ZONE D	STA 330.5	SEATS 4, 5, 6, 7, 8, 9 & 10
ZONE E	STA 387.2	SEATS 11, 12, 13 & 14
ZONE F	STA 380.0	INTERNAL AUXILIARY TANKS #1, & #2
ZONE G	STA 345.0	INTERNAL AUXILIARY TANK #3
ZONE H	STA 310.0	INTERNAL AUXILIARY TANK #4

NOTES:

WEIGHT AND BALANCE FOR INTERNAL AUXILIARY FUEL TANKS ARE ENTERED IN ZONES F, G, AND H, IN ORDER TO SEPERATE CARGO WEIGHT FROM FUEL WEIGHT. FOR ADDITIONAL WEIGHT AND BALANCE INFORMATION, SEE CHAPTER 6.

AK2470
SA

Figure 3-61. IASS Weight and Balance Implementation Chart

KEY/LEGEND	FUNCTION
R1 (NRP)	Press to access the NRP table pages. **NOTE** If OPTN leg is active on another display, an ILLEGAL ACTION alert will be displayed.
R2 (OPTN)	Press to create a temporary leg between any to points in the NRP table. This will create a scratchpad leg page that can be used to evaluate the parameters of a leg between the present position (NRP 0) and any NRP in the table, or between any two NRP's in the table. Once the temporary leg is displayed, the pilot can alter the flight data associated with that leg and see how the change affects the flight plan. If the flight plan change is desired over the current flight plan, the pilot must deselect the OPTN leg function and make modifications to the original leg data with the parameters entered in the OPTN leg. If the flight plan change is not desired over the current flight plan, deselecting the OPTN function will return the system to its previous flight plan data.
R3 (FPLN)	Press to access the flight plan summary pages.
R4 (FUEL/POWER)	Press to access the fuel and power management page.
R7 (LEG DEL)	Press to delete the current display leg number from the flight plan.
R5 and R6	Not used.
	CDU Page 1
L1 (NRP TO/ FROM)	Press to enter the NRP destination/ source (TO/FROM) numbers from the entrypad for a flight plan leg. Entrypad data range: 0 to 100/0 to 100.

KEY/LEGEND	FUNCTION
	NOTE A segment of the symbols representing the flight plan legs on an MFD will not be displayed whenever an INIT, STOP, LAND, or HVR leg is entered and it has the same NRP number for the TO/ FROM values adjacent to L1 key.
L2 (LEG TYPE SELECT INIT, STOP, LAND, APPR, CRS, T/F, or HVR)	Press to enter the type leg from the entrypad for the flight plan leg. The first leg must be an initial leg and the last leg should be a land leg. Toggles between: INIT (initial), STOP, LAND, APPR (approach), CRS (cruise), T/F (terrain following), and HVR (hover). **NOTE** If the groundspeed of the previous leg is zero (0), the groundspeed of an added leg defaults to 120 knots. However, if the groundspeed of the previous leg is greater than zero (0), the groundspeed of an added leg defaults to the groundspeed value in the previous leg.
L3 (GND SPEED)	Press to enter the desired groundspeed from the entrypad for the flight plan leg. Entrypad data range: 0 to 200 knots. (ETA, ETE, and airspeed will be calculated.)
L4 (Entrypad/Alerts)	Standard CDU default pages line key. Refer to paragraph 3-45, CDU Default Pages, for more details.
R1 (DISPLAY LEG)	Press to enter the flight plan leg number from the entrypad to be assigned to the leg. Data entry range: 0 to 99.

KEY/LEGEND	FUNCTION
R2 (DELTA TO/ FROM)	Press to enter the flight plan leg number of the TO/FROM legs to be used for delta calculations. Delta calculations are made using the delta destination NRP number (TO) and the delta source NRP number (FROM).
R3 (ETA)	Press to enter ETA from the entrypad for the arrival time to the destination NRP on the flight plan leg. Entrypad data range: 00.00.00 to 24.00.00 (hours.minutes.seconds). (Airspeed, ETE, and groundspeed will be calculated.)
R4 (SEQ AUTO or MAN)	Press to select between automatic (AUTO) or manual (MAN) for leg sequencing as leg data is modified. Selections Available: AUTO or MAN.
	CDU Page 2
L1 (ETE)	Press to enter ETE from the entrypad for the enroute time to the destination NRP on the flight plan leg. Entrypad data range: 00.00.00 to 12.00.00 (hours.minutes.seconds). When LEG TYPE SELECT is HVR, STOP, or LAND, ETE defaults to 00.05.00; when LEG TYPE SELECT is INIT, ETE defaults to 00.00.00. (Airspeed, ETA, and groundspeed will be calculated.)
	NOTE
	If an INIT leg is changed to another type leg, its ETE remains at the default value of 00.00.00 and must be changed as required.
L2 (CSE)	Press to enter the course from the entrypad for the distination NRP. The final course to the destination NRP will be flown using this data. Entrypad data range: 0 to 360 degrees.

KEY/LEGEND	FUNCTION
L3 (MSA/ESA)	Press to enter the minimum safe altitude (MSA) and the emergency safe altitude (ESA) for the flight plan leg. Entrypad data range: MSA - 0 to 15000 feet; and ESA - 0 to 15000 feet.
L4 (Entrypad/Alerts)	Standard CDU default pages line key. Refer to paragraph 3-45, CDU Default Pages, for more details.
R1 (AIR SPEED)	Press to enter the airspeed to be flown from the entrypad for the flight plan leg. Entrypad data range: 0 to 200 knots. (ETA, ETE, and groundspeed will be automatically calculated.)
R2 (WIND)	Press to enter wind value from the entrypad of the expected wind for the flight plan leg. Winds will be automatically updated by the air data system when the aircraft is actually flying the leg. Entrypad data range: direction - 000 to 360 degrees; and speed - 0 to 200 knots (default is previous wind speed value).
R3 (OAT)	Press to enter the outside air temperature value from the entrypad of the expected temperature for the flight plan leg altitude. Temperature will be automatically updated when the aircraft is actually flying the leg. Entrypad data range: -99 to 99 degrees Celsius (default is previous Celsius value).
	NOTE
	An MSL altitude cannot be entered for a hover leg.

KEY/LEGEND	FUNCTION
R4 (ALT)	Press to enter the altitude from the entrypad for the flight plan leg. Entrypad data range: 0 to 1500A feet (above ground level when radar altimeter hold is selected); or -2000 to 20000M feet (reference to mean sea level when barometric altimeter hold is selected) (default is previous altitude value).
	CDU Page 3
L1 (FWD HOOK)	Not used.
L2 (CTR HOOK)	Press to enter the weight from the entrypad that is attached to the cargo hook during the flight plan leg. Entrypad data range: 0 to 25000 pounds, maximum cargo hook weight is 8000 pounds.
L3 (AFT HOOK)	Not used.
L4 (Entrypad/Alerts)	Standard CDU default pages line key. Refer to paragraph 3-45, CDU Default Pages, for more details.
R1 (ETS ON or OFF)	Press to select ON (installed) or OFF (not installed) for external tank system (ETS). Selection available: ON or OFF.
R2 (FUEL CHG)	Press to enter the fuel weight value from the entrypad for any fuel changes on the flight plan leg. Entrypad data range: -16384 to 16384 pounds.
R3 (STATN A)	Press to enter the fuselage station, weight, and fuselage arm values from the entrypad for any weight changes within zone A for the flight plan leg. Entrypad data range: fuselage station - A through H; weight - -5000 to 5000 pounds; fuselage arm - 0 to 762.6 inches.
R4 (DELTA FE)	Press to enter the effective flat plate area change value from the entrypad for use with the flight plan leg. See External Drag Load Table and Cruise Charts in Chapter 7. Entrypad data range: -99.9 to 999.9 square feet.

3-118. Building or Modifying a Flight Plan.

Flight legs are added or deleted using the MFD flight plan summary page. Modifications are made using the flight plan leg page. The respective CDU page will be automatically displayed when the MFD page appears.

1. Press MFD T4 (SYST) key to display the system page.

NOTE

Changes to a flight plan are automatically calculated by the mission processor and subsequent legs will reflect any of the changes made.

2. To add a flight plan leg, perform the following:
   a. Press MFD R3 (FPLN) key to display the flight plan summary page.
   b. Press MFD R6 (PG▼) and/or L2 (LEG▼) to move the pointer adjacent to the entry where the leg will be added.
   c. Press MFD L4 (ADD LEG) key.
   d. Press MFD L2 (LEG▼) to move the pointer adjacent to the added entry.
   e. Enter leg data into the CDU and press the CDU ENT key.
   f. Repeat steps b. and e. for each new leg to be added.
3. To delete a flight plan leg, perform the following:
   a. Press MFD R3 (FPLN) key on the system page to display the flight plan summary page.
   b. Press MFD R5 (PG▲) or R6 (PG▼) and L1 (SEQ▲) or L2 (LEG▼) to move pointer adjacent to the leg to be removed.
   c. Press MFD R7 (DEL LEG) key to remove flight plan leg.
   d. Repeat steps b. and c. for each new leg to be deleted.

4. To modify an existing leg, perform the following:

   a. Press MFD R2 (LEG) key on the system page to display the flight plan leg page.

   b. Enter the leg number into the CDU under R1 (DISPLAY LEG), or press MFD R5 (PG▲) or R6 (PG▼) to display the data of the leg to be modified.

   c. Enter new leg data into the CDU and press CDU ENT key.

   d. Repeat steps b. and c. for each leg requiring changes.

5. To load original DTM flight plan, press MFD L7 (LOAD FPLN) key with DTM installed.

6. Press MFD L6 (FPLN ON) key to activate the flight plan.

3-119. Tactical/Non-NAVAID Navigation.

Tactical navigation allows using the flight director modes in a tactical environment; and, when conventional NAVAIDS are not available, navigating safely from one location to another. Flight director type navigation data is generated by the mission processor. The flight director generates guidance to NRPs during tactical navigation. The accuracy of the guidance data is based on where the mission processor calculates the NRP location. This location is based on the mission processor's calculation from the aircraft's present position. The mission processor plots NRP locations from the aircraft's present coordinates and provides guidance data as selected to any NRP for a flight plan route. Therefore, the guidance data accuracy is based on the accuracy of the positioning system data in use.

3-120. MFD and CDU Tactical Navigation Control Pages.

Tactical navigation control pages allow using flight director modes to navigate when conventional NAVAIDS are not available (Figure 3-62). These pages can be reached from a primary HSD, VSD, or HVR page by pressing MFD L7 (F/D) key. The MFD tactical navigation control page and its supporting CDU page will appear.

KEY/LEGEND	FUNCTION
	MFD Page
L1 (BKWD SEQ)	Press to decrement the current leg number. Guidance will be provided from the aircraft present position to the destination NRP of the selected leg. Selected leg number is displayed next to L1 key and type of leg is displayed next to L2 key. (Leg type: INIT, HVR, LAND, APPR, CRS, STOP, and T/F)
L2 (LAND LEG FWD)	Press to increment the current leg number. Guidance will be provided from the aircraft present position to the destination NRP of the selected leg. Selected leg number is displayed next to L2 key and type of leg is displayed next to L3 key. (Leg type: INIT, HVR, LAND, APPR, CRS, STOP, and T/F.)
L3 (WYPT)	Press to activate the guidance via the route defined in the flight plan.
L4 (CSE)	Press to activate, deactivate, or arm course guidance if a course was entered for the NRP, approach, or waypoint mode. Armed will automatically appear when the course mode is active and the aircraft is not within the course boundaries.
L5 (NRP)	Press to select or deselect NRP mode. When active, it provides direct or course guidance to the designated NRP. A course must be entered and activated for course guidance to the NRP.
L6 (APPR)	Press to activate, deactivate, or arm approach mode. When active, it provides vertical, longitudinal, and lateral steering for a programmed descent and deceleration to the designated NRP. Armed will automatically appear when the approach mode is active and the aircraft is not within the approach/course boundaries.

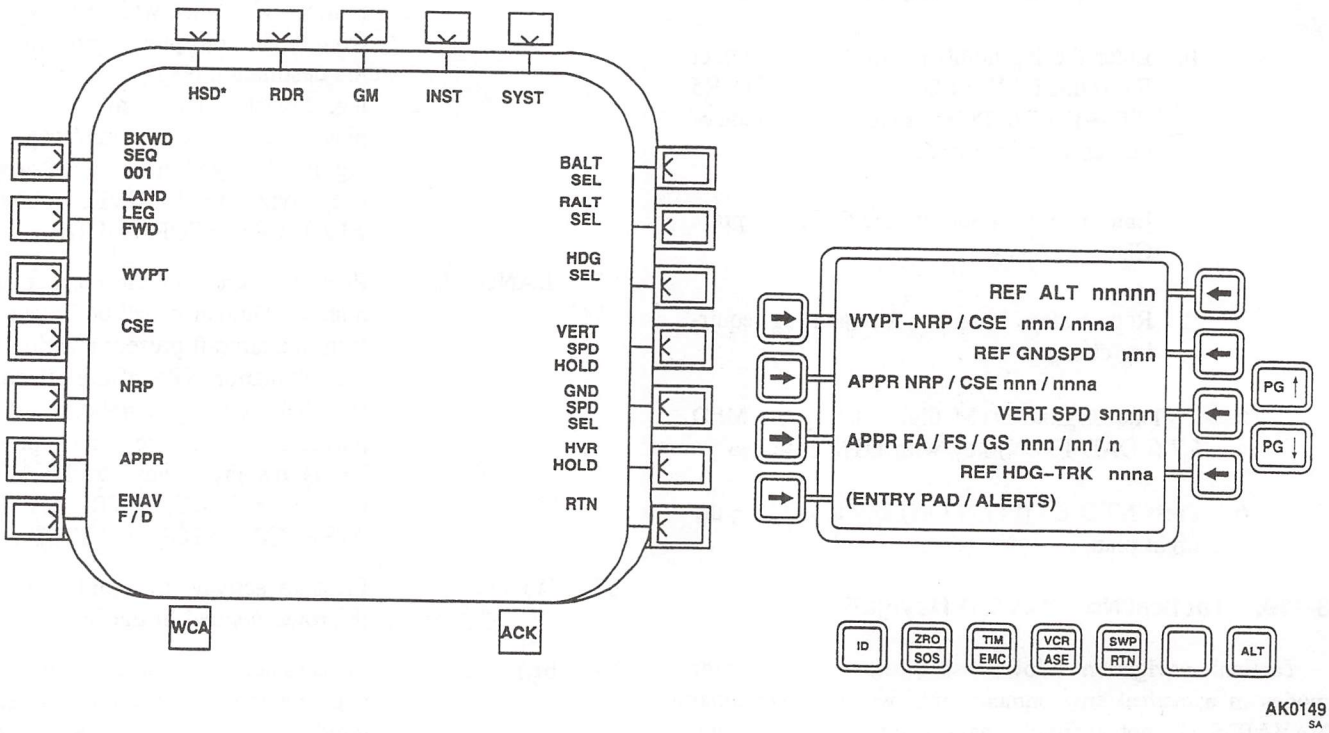

Figure 3-62. MFD and CDU Tactical Navigation Control Pages

KEY/LEGEND	FUNCTION
L7 (ENAV F/D)	Press to access the electronic navigation control pages.
R1 (BALT SEL)	Press to select or deselect barometric altitude select/hold. Provides guidance to achieve and maintain the barometric altitude entered as REF ALT in the CDU. When active, the box around the barometric altitude increases in thickness.
R2 (RALT SEL)	Press to select or deselect radar altitude select/hold. Provides guidance to achieve and maintain the radar altimeter altitude entered as REF ALT in the CDU. When active, the box around the radar altitude increases in thickness.
R3 (HDG SEL)	Press to select or deselect heading select/hold. Provides guidance to achieve and maintain heading entered as REF HDG in the CDU. When active, the box around the aircraft heading increases in thickness. Also, the vertical extension will appear on the command plane cue and the commanded heading indicator/selected heading pointer will appear on the compass tape/ circular compass scale on the MFD's VSD/HSD/HVR.

KEY/LEGEND	FUNCTION
R4 (VERT SPD HOLD)	Press to select or deselect the vertical speed hold mode. Provides guidance to achieve and maintain the vertical speed rate entered as VERT SPD in the CDU.
R5 (GND SPD SEL)	Press to select or deselect groundspeed select/hold. Provides guidance to achieve and maintain the groundspeed entered as REF GNDSPD in the CDU. When active, the box around the aircraft groundspeed increases in thickness on the MFD's HSD, the horizontal extensions will appear on the command plane cue.
R6 (HVR HOLD)	Press to activate hover hold using current aircraft conditions.
R7 (RTN)	Press to return to the current flight symbology (HSD, VSD, or HVR) display.
	CDU Page
L1 (WYPT-NRP/CSE)	Press to enter the NRP number and course from entrypad for use when guidance information is being provided to an NRP. Entrypad data range: NRP - 1 to 100; and CSE - 000M to 360M (magnetic) or 000T to 360T (true) degrees.
L2 (APPR NRP/CSE)	Press to enter the NRP number and course from entrypad for use when guidance information is being provided for an NRP approach. Entrypad data range: NRP - 1 to 100; and CSE - 000M to 360M (magnetic) or 000T to 360T (true) degrees.
L3 (APPR FA/FS/GS)	Press to enter the final altitude, final airspeed, and glideslope angle from the entrypad for guidance information during the approach mode. Entrypad data range: FA - 60 to 500 feet (radar altitude); FS - 0 to 50 knots; and GS - 2, 4, or 6 degrees.
L4 (Entrypad/Alerts)	Standard CDU default pages line key. Refer to paragraph 3-45, CDU Default Pages, for more details.
R1 (REF ALT)	Press to enter the reference altitude from the entrypad for use when altitude hold is selected. Entrypad data range: 0 to 1500 if radar altitude is selected or -2000 to 30000 if barometric altitude is selected.
R2 (REF GNDSPD)	Press to enter the groundspeed from the entrypad for use when groundspeed hold is selected. Entry range: 0 to 150 knots.
R3 (VERT SPD)	Press to enter the vertical speed hold from the entrypad for use when vertical speed hold is selected. Entrypad data range: -2000 to 2000 feet per minute.
R4 (REF HDG-TRK)	Press to enter the heading/track value from the entrypad for use when groundspeed hold is selected. Entrypad data range: 000M to 360M (magnetic) or 000T to 360T (true) degrees.

3-121. Flight Director Modes.

WARNING

Altitude modes that are selected via the MFDs do not cause cyclic and collective displacements to maintain the selected altitude as the AFCS CONTROL panel modes. The MFD altitudes provide guidance information only, and the pilot must manually move the cyclic and collective as necessary to follow the flight director guidance on the MFD display to maintain the selected altitude.

NOTE

Altitude modes on the AFCS CONTROL panel can be used in conjunction with lateral steering modes provided by the flight director. However, mixing AFCS altitude hold with lateral steering guidance from the flight director is not recommended during terrain flight and when flying low AGL altitudes.

Guidance information is provided by the mission processor under several modes. The pilot selects the desired mode as necessary to accomplish the mission. Some modes are automatically deactivated when another mode is activate (i.e., when the WYPT, NRP, APPR, VOR, VORTAC, ILS, IBC, PLS, TACAN, TCNP, TRK, GA, or ADF mode become active, any other active mode will be deactivate). Some modes go to the armed state when selected and become active when its capture criteria/parameters are met. If another mode is active when an armed mode becomes active, the other mode is automatically deactivated. Figure 3-63 provides a matrix of the possible armed and active conditions, and which modes can become active when one is already active.

3-122. Course Mode.

The course mode selects the inbound/outbound radial or bearing to/from a NAVAID or NRP. When course is entered and selected, the course needle and course deviation indicators provide guidance when L1 key on the electronic navigation page displays VOR, ILS, TCN, IBC, or NRP. Lateral guidance information is derived from the signal being received from the NAVAID except when course information is from an NRP. When a NAVAID is providing guidance information and the CDI is kept centered, the aircraft path should cross directly over the physical NRP location. However, when using an NRP as guidance information, the aircraft path may not cross directly over the physical coordinates represented by the NRP.

3-123. Track Mode.

The track mode selects a ground track to be maintained along the earth surface while flying. When VSD symbology is displayed, guidance cues from the command plane symbol will allow following a ground track from its present position along the track value (degree heading) entered in the CDU. If no track information is entered for a NAVAID that has been selected for CDI information, the command plane cues will be based upon a 30 degree track intercept course if the aircraft present course is greater than 30 degrees. Track information entered into the CDU must be within 90 degrees of the course which is to be intercepted. Wind corrections are automatically added to the guidance cues to maintain the selected ground track. The track (TRK) mode will maintain the ground track existing at the time the track mode is activated. If a different ground track is needed, the new course is entered through the CDU and the flight director will provide lateral guidance cues based on the new course. The track mode is activated from the electronic navigation control page.

3-124. Heading Mode.

The heading mode is normally used when direction of travel is the only requirement. This mode does not apply any wind corrections to the heading cue. Therefore, when ground track is important and wind condition must be taken in consideration, this selection should not be used. The heading select (HDG SEL) mode follows a pilot selected true or magnetic heading. This mode can be requested from the tactical navigation control page. The heading as well as the true/magnetic reference may be changed at any time using the CDU. The mode can be deactivated manually by pressing the HDG SEL* key or automatically by activating another lateral guidance mode.

3-125. Altitude Hold Mode.

The altitude hold mode provides guidance cues via the power cue to reach and maintain a pilot selected altitude. If the helicopter deviates from the desired barometric or radar altitude, the power cue appears, indicating that the pilot should raise or lower the collective to obtain the desired altitude. The reference altitude may be changed at any time and guidance will then be provided to reach and maintain the new altitude. Altitude hold is available from 40 to 1500 feet AGL when radar altitude is used, and from -2000 to 30,000 feet MSL when barometric altitude is used. Should a failure of the radar altimeter occur, the barometric altimeter will automatically be engaged maintaining MSL altitude at which the radar altimeter failed. The radar altitude or barometric altitude mode can be activated from the tactical navigation control page. The accompanying CDU page allows selection of the reference altitude for either RALT or BALT. The RALT or BALT SEL mode may be manually deactivated by pressing RALT SEL* or BALT SEL*. Either mode will be automatically deactivated by selecting the go-around mode or if the vertical portion of the APPR or ILS mode becomes active.

3-126. Groundspeed Mode.

The Groundspeed Select (G/S SEL) mode provides guidance to achieve and maintain a pilot selected groundspeed. The G/S SEL mode is activated from the tactical navigation control page and the current groundspeed will become the maintained reference groundspeed. The reference groundspeed may be changed at any time and guidance will be provided to maintain the new groundspeed. The allowable range for selected groundspeeds is 0 to 150 knots. The G/S SEL mode may be manually deactivated by pressing the GND SPD SEL* key. The G/S SEL mode will

GUIDANCE MODE INTERACTION

CURRENT ACTIVE COLUMN ENTITY ⇨ / CROSSCHECK ENTITY ⇩	WAYPOINT	NRP	VOR ARM	VOR ACTIVE	VORTAC ARM	VORTAC ACTIVE	TACAN ARM	TACAN ACTIVE	ADF	TRK	HDG SEL	TCNP	APPR (LAT)	APPR ARM (LONG)	APPR ACTIVE (LONG)	APPR ARM (VERT)	APPR ACTIVE (VERT)	GA ARM (LONG)	GA ACTIVE (LONG)	GA SPD (VERT)	GA (LAT)	GND SPD SEL	RALT SEL	BALT SEL	ILS ARM (LAT)	ILS ACTIVE (LAT)	ILS ACTIVE (LONG)	ILS ARM (VERT)	ILS ACTIVE (VERT)	TF ARM	TF ACTIVE	VERTICAL SPEED	PLS	HOVER HOLD
WAYPOINT		X	X	X	X	X	X	X	X	X	X	X	X	X	X	X	X				X				X	X	X	X	X				X	
NRP	X		X	X	X	X	X	X	X	X	X	X	X	X	X	X	X				X				X	X	X	X	X				X	X
VOR ARM	X	X		X	X	X			X		X	X	X	X	X	X	X				X				O	O	O	O	O				X	X
VOR ACTIVE	O	O	X		O	O			X	X	X	X	O	O	O	O	O								O	O	O	O	O				O	X
VORTAC ARM	X	X	X	X		X	X	X	X		X	X	X	X	X	X	X				X				O	O	O	O	O				X	X
VORTAC ACTIVE	O	O	O	O	X		O	O	X	X	X	X	O	O	O	O	O				X				O	O	O	O	O				O	X
TACAN ARM	X	X			X	X		X	X		X	X	X	X	X	X	X				X					X	X	X	X				X	X
TACAN ACTIVE	O	O		X	O	O	X		X	X	X	X	O	O	O	O	O				X					O	O	O	O				O	X
ADF	X	X		X		X		X		X	X	X	X	X	X	X	X				X					X	X	X	X				X	X
TRK	X	X		X		X		X	X		X	X	X	X	X	X	X				X					X	X	X	X				X	X
HDG SEL	X	X		X		X		X	X	X		X	X	X	X	X	X				X					X	X	X	X				X	X
TCNP	X	X		X		X		X	X	X	X		X	X	X	X	X				X					X	X	X	X				X	X
APPR (LAT)	X	X	X	X	X	X	X	X	X	X	X	X									X				X	X	X	X	X			X	X	X
APPR ARM (LONG)		X	X	X	X	X	X	X	X	X	X	X			X							X			X	X	X	X	X			X	O	X
APPR ACTIVE (LONG)		O	O	O	O	O	O	O	O	O	O	O		X							X		O	O	O	O	O	O	O			O	O	X
APPR ARM (VERT)		X	X	X	X	X	X	X	X	X	X	X					X						X	X	X	X	X	X	X			X	O	
APPR ACTIVE (VERT)		O	O	O	O	O	O	O	O	O	O	O				X				X	O		O	O	O	O	O	O	O	O	O	O		
GA ARM (LONG)															X				X			X					X							
GA ACTIVE (LONG)															O			X				O					O							
GA (VERT)																	X						X	X				X	X	O	O	X		
GA (LAT)	X	X	X	X	X	X	X	X	X	X	X	X	X												X	X							X	X
GND SPD SEL														X	X			X	X								X							X
RALT SEL																X	X			X				X					X	O	O	X		
BALT SEL																X	X			X			X						X	O	O	X		
ILS ARM (LAT)	X	X	O	O	O	O			X		X	X	X	X	X	X	X	X	X	X	X						X	X	X	X	O	O	X	X	X
ILS ACTIVE (LAT)	O	O	O	O	O	O	X	X	X	X	X	X	O	O	O	O	O	O	O	O	O				X					O	O	O	O	X
ILS ACTIVE (LONG)	O	O	O	O	O	O	O	O	O		O	O	O	O	O	O	O	O	O	O	O	O								O	O	O	O	X
ILS ARM (VERT)	O	O	O	O	O	O	O	O	O	O	O	O	O	O	O	O	O	O	O	O	O								X	O	O	O	O	
ILS ACTIVE (VERT)	O	O	O	O	O	O	O	O	O	O	O	O	O	O	O	O	O	O	O	O	O		X	X				X		O	O	O	O	
TF ARM																	X			X			X	X	X	X	X	X	X		O			
TF ACTIVE																	O			O			O	O	O	O	O	O	O	X		X		
VERTICAL SPEED																				X			X	X					X	O	O			
PLS	X	X	X	X	X	X	X	X	X	X	X	X	X	X	X	X	X				X				X	X	X	X	X					X
HOVER HOLD		X	X	X	X	X	X	X	X	X	X	X	X	X	X			X	X	X	X	X			X	X	X	X	X				X	

NOTE: USE LISTING ACROSS THE TOP TO IDENTIFY CURRENT MODE(S) IN USE AND USE VERTICAL LISTING DOWN THE LEFT SIDE TO DETERMINE WHICH MODE(S) CAN BE SELECTED DURING THE CURRENT MODE. AN (X) IN THE ROW OF A COLUMN MEANS ACTIVATING THE MODE IDENTIFIED BY THIS ROW WILL DEACTIVATE THE MODE IDENTIFIED BY THIS COLUMN. A BLANK IN THE ROW OF A COLUMN MEANS ACTIVATING THE MODE IDENTIFIED BY THIS ROW WILL NOT AFFECT THE MODE IDENTIFIED BY THIS COLUMN. AN (O) IN THE ROW OF A COLUMN MEANS THE MODE IDENTIFIED BY THIS ROW CANNOT BE ACTIVATED WHILE THE MODE IDENTIFIED BY THIS COLUMN IS ACTIVE. THE FOLLOWING REPRESENT AUGMENTING EXPLANATORY PARAMETERS TO SOME ENTRIES; LAT – WITH LATERAL STEERING CUES; LONG – WITH LONGITUDINAL STEERING CUES; AND VERT – WITH VERTICAL STEERING CUES.

AK2477
SA

Figure 3-63. Guidance Modes Matrix

be automatically deactivated when the DEPART button or the glideslope portion of the APPR or ILS modes become active.

3-127. Vertical Speed Hold Mode.

The vertical speed hold mode provides guidance to attain and maintain a desired vertical speed. This mode is requested from the tactical navigation control page by pressing MFD key VERT SPD HOLD and selecting the speed in the CDU. The reference vertical speed may be changed at any time and guidance will then be provided to achieve and maintain the new vertical speed. The allowable range for the vertical speed is from 100 to 1000 feet/minute and from -100 to -1000 feet/minute.

3-128. Approach/Go-Around (GA) Mode.

WARNING

During an approach with airspeed below 60 knots, pressing the DEPART button on the cyclic stick will cause the AFCS departure profile to engage. Pilot must ensure sufficient clearances exist from point of engagement until completion departure profile.

The approach mode provides vertical and lateral guidance cues for a programmed descent and deceleration to a designated NRP along a prescribed course. The pilot can enter a final approach groundspeed (0 to 50 knots), glideslope angle (2 to 6 degrees), and altitude (40 to 500 feet) for the approach being executed. Guidance cues will be provided to assist the pilot in achieving groundspeed, maintaining the glideslope angle, and maintaining the desired altitude once reached. Groundspeed and altitude control for the approach are provided by a pair of fixed profiles. The velocity profile consists of a constant deceleration segment (1.3 knots per second) that terminates in a flare at the desired velocity. The altitude profile is a constant glideslope angle segment followed by a flare at the desired hover altitude. The hover altitude is achieved short of the hover point, allowing the final segment of the deceleration profile to be completed at the hover altitude. These profiles serve two purposes. First, they can be used to define the required range to the hover point as a function of the current helicopter velocity and altitude. This allows the range gate (the point at which the helicopter descent is initiated) to be easily located on the desired course. The profiles can then be used to compute the range required to descend from the current altitude to the final hover altitude and the range required to decelerate from the current groundspeed to the desired final groundspeed. Secondly, once the range gate is captured, the profiles can be used to determine the desired speed and altitude so that these can be smoothly decreased as the hover point is approached. The approach mode is requested by selecting the APPR key on the tactical navigation control page, entering an NRP number, a desired approach course, a final approach speed, and a final radar (hover altitude) altitude. When a valid NRP number and course have been entered, the approach mode will become armed (APPR ARM). While armed, guidance cues will assist the pilot in reaching the entry point (approach gate) where the NRP approach is initiated. Barometric altitude hold (BARO SEL) and groundspeed hold (G/S SEL) modes are engaged when the approach mode becomes armed. If the approach mode is deselected, BARO ALT and G/S SEL modes will remain engaged. However, when the approach mode is rearmed, the BARO ALT and G/S SEL values are derived from the current aircraft parameters for barometric altitude and groundspeed instead of the previously entered values for BARO ALT and G/S SEL. During the approach phase, cues are provided to assist the pilot in arriving at correct groundspeed, hover altitude, and NRP coordinates. When the aircraft is 500 feet above the entered final altitude, the IASS will check the validity of the radar altimeter. The IASS will start to filter out barometric altitude and filter in radar altitude when the aircraft is within 250 feet of the final approach altitude and transition to pure radar altitude when 150 feet of the final approach altitude. If radar altimeter signals are invalid or the radar altimeter is inoperative, a GUIDANCE MODE DISENGAGED advisory will appear and collective cues will be removed; however, lateral steering will continue to be provided. The hover altitude is normally reached 300 feet prior to the NRP coordinates when final groundspeed is greater than zero. If BALT SEL or RALT SEL mode is selected while APPR is active, the final altitude will be overridden and the approach will be continued at the present altitude. If the DEPART button on the cyclic is pressed during an uncoupled approach with airspeed above 60 knots, the approach mode will terminate and return to APPR ARM mode. Guidance cues to assist the pilot in making a go-around will be provided. The GA mode provides longitudinal and vertical guidance cues to achieve a rate of climb of 500 feet per minute at an airspeed of 80 knots. Should radar altitude data become unavailable when the GA mode is active, the go-around vertical reference will automatically switch to a barometric altitude reference and continue processing. Groundspeed, barometric altitude, and/or radar altitude hold may be engaged at any time during the go-around. When a 200-foot per minute rate of climb is reached, the longitudinal axis is activated to cause acceleration to the desired speed. Airspeed hold will engage when the desired airspeed is attained. If a coupled approach is being performed, the AFCS computer will initiate a go-around using the param-

eters built into the AFCS system. The approach mode will become active again if the DEPART button is pressed to deactivate the GA mode. The approach mode must be manually deactivated by pressing the MFD APPR* key or selecting any other lateral guidance mode.

3-129. Hover Mode.

The hover mode has a special set of symbols which are only displayed when HVR under T1 is selected (Figure 3-55). These symbols provide the pilots with cues as to what the aircraft is doing while in a hover condition or very slow airspeed. The hover symbology display provides velocity movement indicator, a velocity acceleration indicator, and a height perspective in reference to the hover height entered via the CDU. The pilot must use collective and cyclic controls as required to maintain the desired hover parameters.

3-130. NRP Mode.

The NRP mode (direct, course, and moving) provides guidance to preselected UTM or LAT/LONG coordinates which are entered as an NRP (Figure 3-64). The pilot can fly directly to the NRP or via a desired course to the NRP. The NRP needle is used when HSD symbology is being displayed, and the command plane cue is used when VSD symbology is being displayed.

a. Direct NRP Guidance. The direct NRP guidance directs the helicopter to the selected NRP by the shortest path. The NRP must be selected and active (NRP*) on the MFD tactical navigation control page. Guidance will now be provided to fly the helicopter directly to the NRP if course is not selected. Direct guidance can be turned off at any time by pressing MFD key L5 (NRP*), or selecting another guidance option. Capture criteria are satisfied whenever the helicopter is within the radial distance represented by the current helicopter turn radius plus a 1/4 nautical mile and is at a right angle to the NRP.

b. NRP Course Guidance. The NRP course guidance directs the helicopter to the NRP along a specified course (Figure 3-65). Since the entire path is computed, the path to be flown to the NRP will be displayed on the MFD. The NRP course guidance is activated (CSE*) on the tactical navigation control page. When a course is used in conjunction with the NRP, the intercept path on the desired course will be at least one nautical mile short of the NRP at an intercept angle of less than 70 degrees. The NRP guidance will turn off automatically when the NRP is reached. Also, the NRP guidance can be turned off manually by deactivating NRP* or by selecting a different flight director guidance.

NOTE

Prior to entering a moving NRP, system time must be entered manually or GPS time must be available.

Approach guidance can be provided for moving NRPs with a velocity of 50 knots or less.

c. Moving NRP Guidance. This guidance capability can direct the helicopter to intercept a moving NRP. The selected NRP must have velocity and course specified and must have one of the moving NRP numbers, 96 through 100, selected. NRPs with these numbers are recognized as moving NRPs and will be used to compute guidance to an anticipated intercept point. If the velocities specified for the helicopter and/or NRP are such that the point cannot be intercepted, an IMPOSSIBLE AIRSPEED REQUIRED alert is displayed in the MFD. The moving NRP guidance option can be turned off at any time by either pressing MFD key L5 (NRP*) to reflect deactivation (NRP) or selecting another guidance option. Once the intercept point is reached, the moving NRP guidance is automatically turned off. A moving NRP can also be part of a flight plan. When a waypoint is selected, the guidance to the moving NRP will be provided when that portion of the flight plan is active.

3-131. Waypoint Mode.

The waypoint mode allows activating the NRPs entered in the flight plan (Figure 3-64). Once activated, guidance information is provided to assist the pilot in flying the route outlined in the flight plan. The first four consecutive legs from the current aircraft position is displayed in the HSD mode. Dashed lines identify legs between NRPs. Guidance information is normally provided by the command plane cue in the VSD mode and the NRP needle in the HSD mode.

3-132. Terrain Following Mode.

The terrain following (TF) mode uses the terrain following signals from the MMR to generate collective cue commands. This mode provides cues to maintain a set clearance altitude over major high points/obstacles in the terrain flight mode. When TF is engaged, the pilot must select the desired set clearance altitude and the desired ride setting. Pressing the TF key will then arm the mode (TF ARM). After three seconds, the MMR will collect sufficient data to issue a command, and the TF mode will become active (TF*). The TF mode may be manually deactivated by pressing the TF* key twice within three seconds. The TF

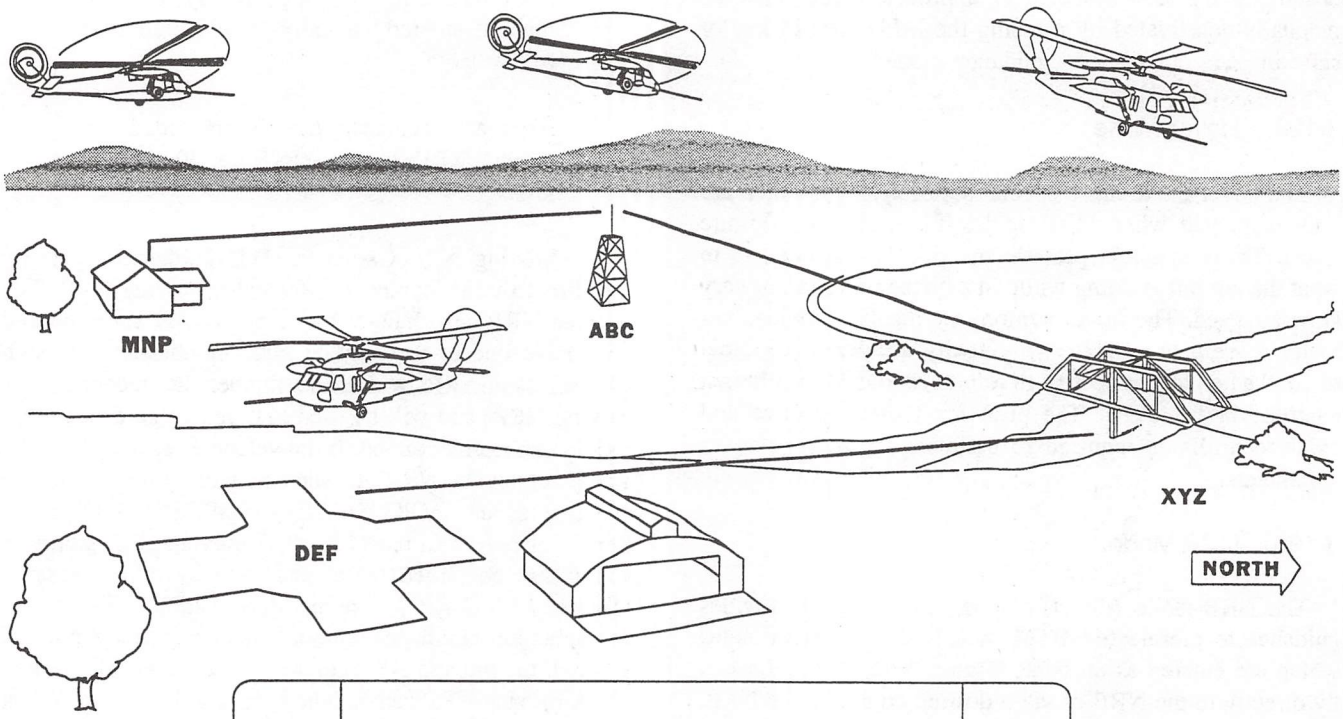

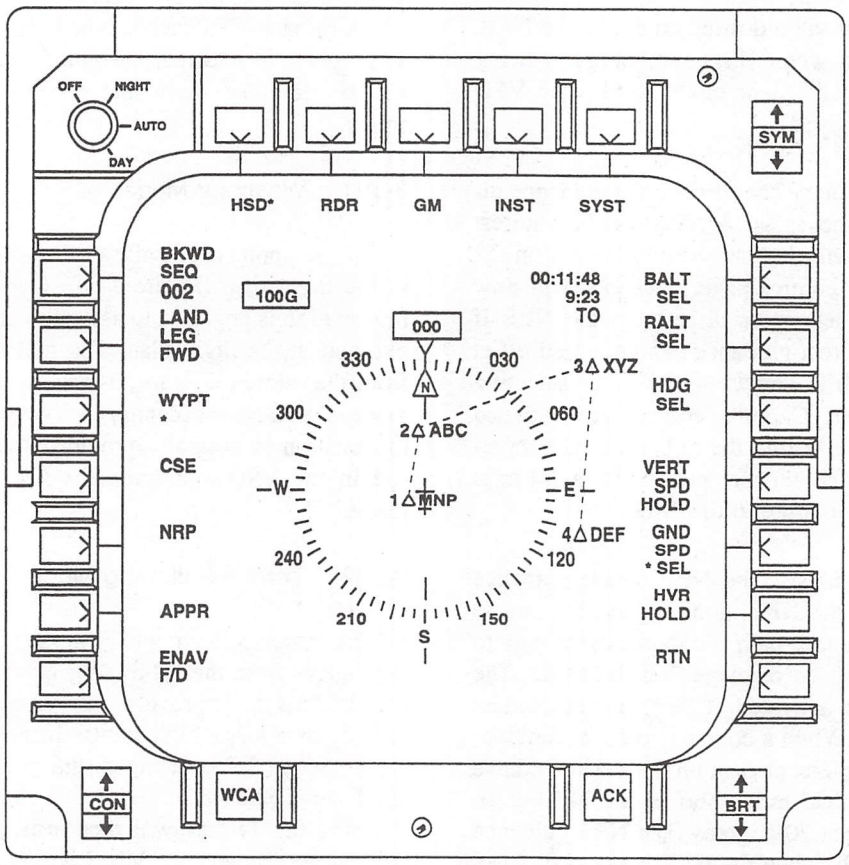

AK2460
SA

Figure 3-64. Flight Plan Display

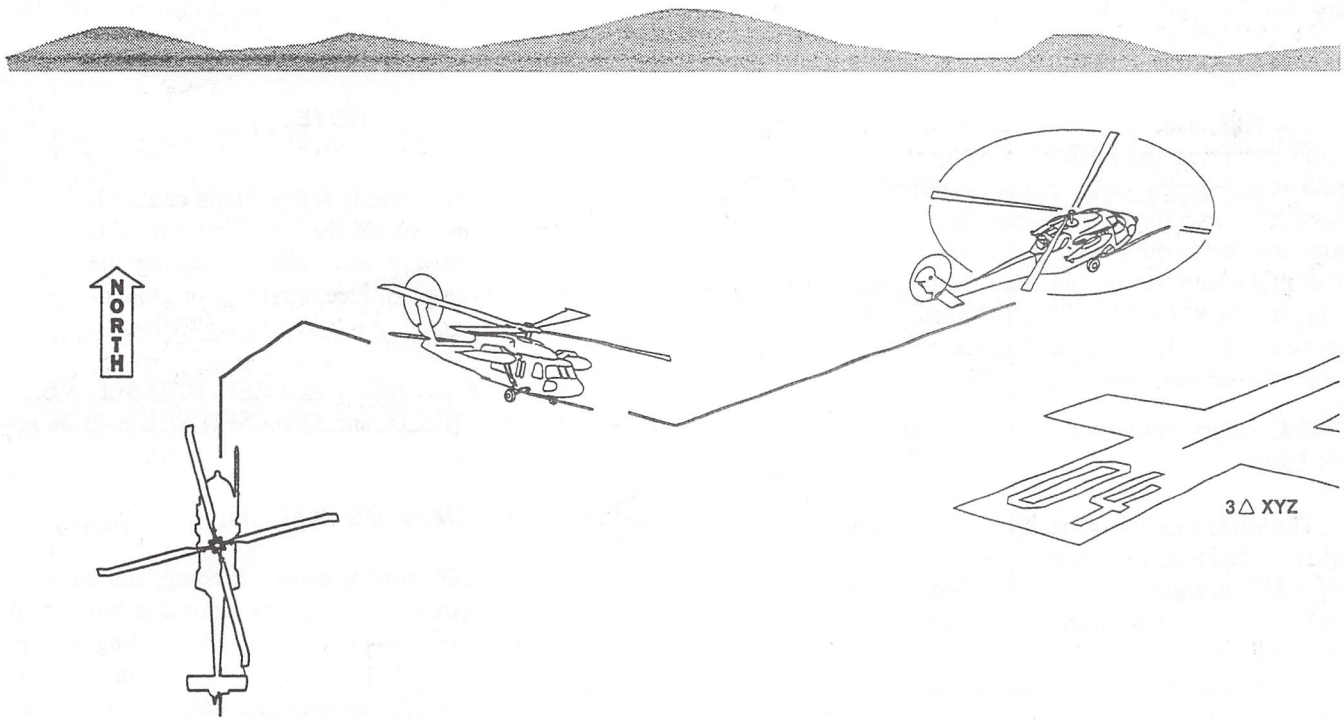

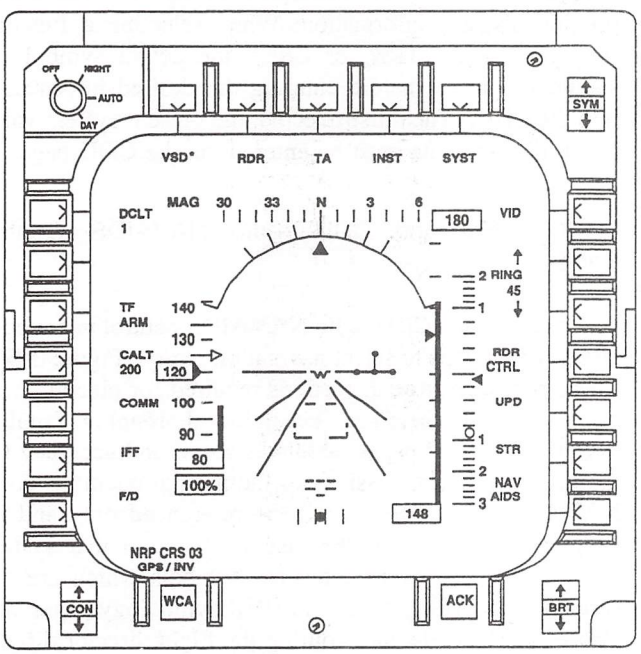

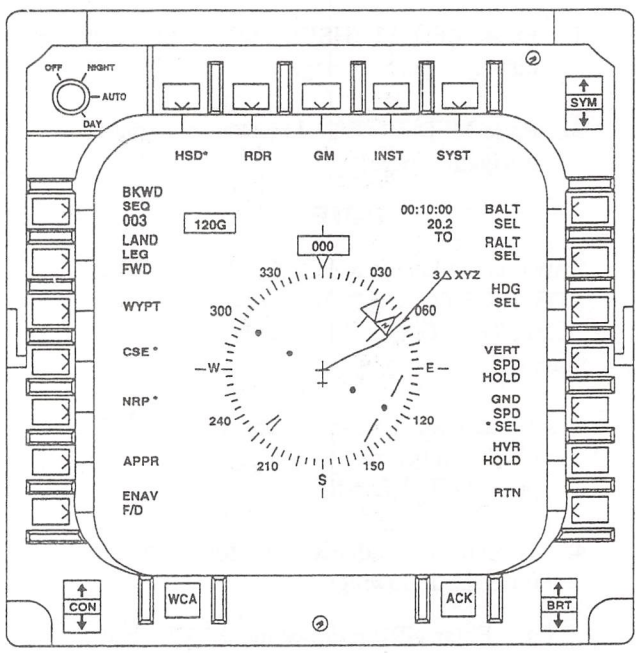

VSD RADAR PAGE **HSD RADAR PAGE**

AK2459
SA

Figure 3-65. NRP Course Guidance

mode cannot be automatically deactivated under any conditions. If the TF mode is active when the APPR or GA modes are requested, the TF mode will override the vertical portion of the requested mode, allowing a terrain following/approach or a terrain following go-around.

3-133. Flight Path Vector Mode.

The flight path vector mode provides guidance when the pilots are using the FLIR as a navigation aid. The flight path vector symbol indicates the aircraft path. During NRP navigation with the FLIR system, the pilot must attempt to superimpose the FPV symbol over the command plane cue. The flight path vector and flight path angle symbols are removed from the MFD display when aircraft speed decreases below 40 KIAS and return to the MFD display when the aircraft speed increases above 44 KIAS.

3-134. Normal Operations to Activate a Flight Director Mode.

The aircraft must have an operational positioning system when a flight director mode is used for tactical or non-NAVAID navigation. In addition, NRP locations must be entered for any flight plan that is not presently part of the flight plan summary page. Refer to the respective paragraphs to ensure the above requirements are met. Flight director guidance is also available when radio NAVAIDS are used for navigation.

1. Press MFD T1 (HSD, VSD, or HVR) key to display a primary page.

2. Press MFD L7 (F/D) key to display the tactical navigation page.

NOTE

Only one mode among WYPT, NRP, APPR, VOR, VORTAC, ILS, IBC, PLS, TACAN, TCNP, TRK, GA, or ADF can be active at a time.

3. To activate guidance cues to an NRP, enter NRP number into CDU adjacent L1 key and press MFD L5 (NRP) key.

4. To activate guidance cues for an APPR, perform the following:

   a. Enter NRP number into CDU adjacent L2 key.

   b. Enter the approach final altitude, final airspeed, and hover altitude into the CDU adjacent to L3 key.

   c. Press MFD L6 (APPR) key.

5. To activate guidance cues for the flight plan, press MFD L1 (WYPT) key. The flight plan must already exist or this mode will not become active.

NOTE

When a flight plan is active, some of its parameters may be changed if a different CDU value is entered and activated during the flight leg (e.g., altitude, airspeed, or groundspeed hold).

6. Set BALT SEL, RALT SEL, HDG SEL, VERT SPD HOLD, and GND SPD SEL hold as required.

3-135. Radio NAVAIDS Systems.

Radio NAVAIDS provide course, heading, and track information, primarily provided by the automatic directional finder (ADF), VHF omnirange/instrument landing system (VOR/ILS), TACAN, FM-homing capability, and personnel locator system (PLS). Normally, heading and course or track and course is selected when navigating or making an approach to a NAVAID. Some of the radio NAVAIDS also provide distance information. When selecting a function (i.e., HDG-REF, TRK, or CSE), the active symbol (*) should be present before entering the desired information into the CDU. When first selected, the present system value is set and new data must be entered via the CDU page.

3-136. MFD and CDU radio NAVAIDS Control Pages.

The MFD and CDU radio NAVAIDS control pages contain key functions to select navigation radios (Figure 3-66). These pages describe the actions required for placing them into operation; therefore, becoming thoroughly familiar with these control pages facilitates speed and accuracy for the pilot. During discussions of the normal operation for a NAVAID, this paragraph will be referenced only and no supporting artwork will be displayed within that system descriptive data. Information and symbols which are described on the HSD, VSD, and HVR symbology pages will also be used as references during the flight director discussion. When an MFD page is accessed and displayed, the respective CDU will also appear.

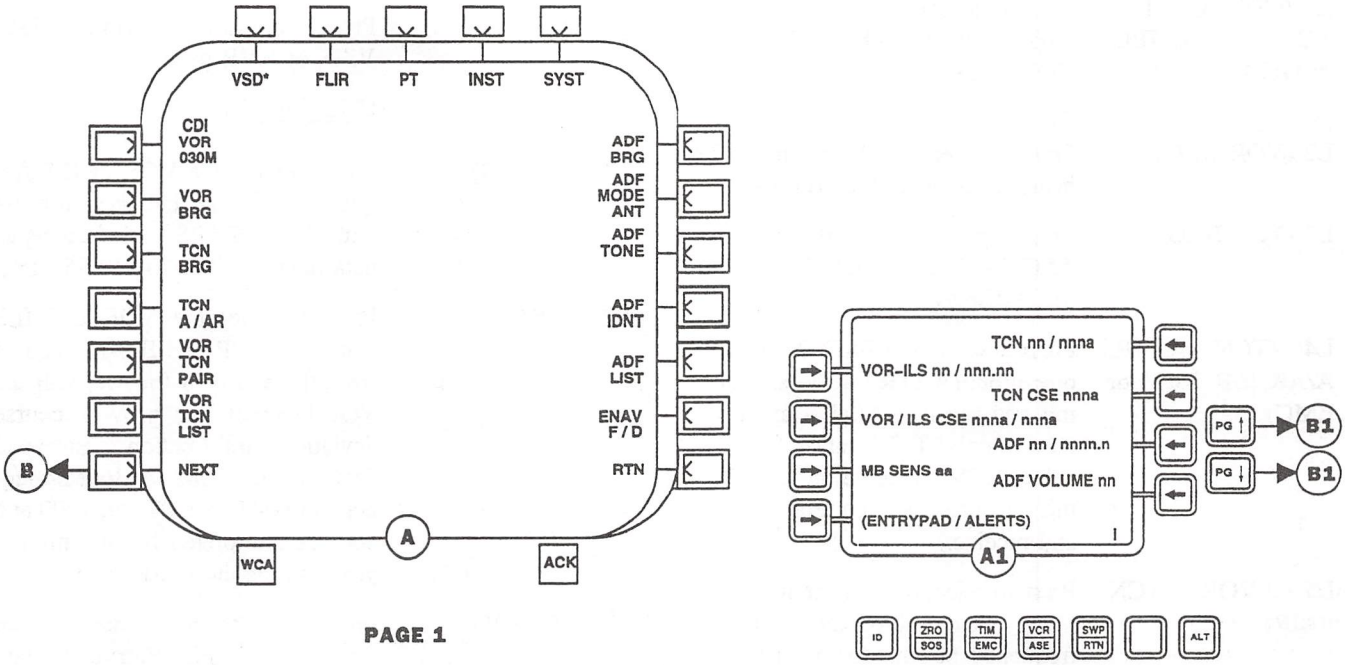

AK0270
SA

Figure 3-66. MFD and CDU Radio NAVAIDS Control Pages

KEY/LEGEND	FUNCTION
	MFD Page 1
L1 (CDI VOR, ILS, TCN, NRPxx, IBC, or OFF)	Press to select the course deviation indicator (CDI) to be used with the VOR, ILS, TCN, IBC, or NRP number.
L2 (VOR BRG)	Press to select or deselect the VOR bearing needle on the MFD display.
L3 (TCN BRG)	Press to select or deselect the TACAN bearing needle on the MFD display.
L4 (TCN AATR, A/AR, T/R, RCV, or EMC)	Press to select the TACAN mode of operation. (AATR - air to air transmit and receive; A/AR - air to air receive only; T/R - transmit and receive; RCV - receive only; EMC - mission processor control transmit and receive.)
L5 (VOR TCN PAIR)	Press to select or deselect automatic VOR and TACAN channel/ frequency pairing for a VORTAC NAVAID. This function enables storing of the associated TACAN channel with the VORTAC frequency. (NOTE: TACAN and VOR is activated independently; if one radio is inoperative or turned off, the other radio will be operational.)
L6 (VOR TCN LIST)	Press to access the VOR and TACAN frequency list page.
L7 (NEXT)	Press to access page 2 of the radio NAVAIDS control pages.
R1 (ADF BRG)	Press to select or deselect the ADF needle on the MFD display.
R2 (ADF MODE ANT or ADF)	Press to select the ANT or ADF mode of operation.
R3 (ADF TONE)	Press to select or deselect a continuous tone (1 KHz) which identifies the presence of certain ADF NAVAIDs.
R4 (ADF IDNT)	Press to select or deselect the tone used to identify an ADF NAVAID.
R5 (ADF LIST)	Press to access the ADF frequency list page.
R6 (ENAV F/D)	Press to access the electronic navigation control page.
R7 RTN	Press to return to the primary HSD, VSD, or HVR page.
	CDU Page 1
L1 (VOR/ILS)	Press to enter the VOR or ILS frequency from the entrypad for use with the VOR/ILS radio. Entrypad data range: 108.00 to 117.95 MHz.
L2 (VOR/ILS CSE)	Press to enter the VOR and ILS course or VOR and ILS-BC course from the entrypad for use with the VOR/ILS radio to provide course deviation information. Entrypad data range: 000M to 360M magnetic or 000T to 360T true (000 and 360 are interpreted by the mission processor as the same value).
L3 (MB SENS)	Press to enter the marker beacon sensitivity level. Entrypad data range: HI - high or LO - low.
L4 (Entrypad/Alert)	Standard CDU default pages line key. Refer to paragraph 3-45, CDU Default Pages, for more details.
R1 (TCN)	Press to enter the TACAN channel from the entrypad for use with the TACAN radio. Entrypad data range: 001x to 126x or 001y to 126y.
R2 (TCN CSE)	Press to enter the TACAN course from the entrypad for use with the TACAN radio to provide course deviation information. Entrypad data range: 000M to 360M magnetic or 000T to 360T true (000 and 360 are interpreted by the mission processor as the same value).
R3 (ADF)	Press to enter the frequency from the entrypad for use with the ADF radio. Entrypad data range: 100.0 to 2199.5 KHz.

KEY/LEGEND	FUNCTION
R4 (ADF VOLUME)	Press to enter the desired value from the entrypad to set the audio level for the ADF radio. Data entry range: 1 to 11, eleven being maximum volume.
	CDU Page 2
L1 (SINC GARS)	Press to enter the channel or frequency from the entrypad for use with the SINCGARS radio. Entrypad data range: channel - 0 to 20 (0 used to return to previous frequency); VHF-FM frequency - 30 to 87.975 tunable in 0.025 MHz increments.
L2 (UHF)	Press to enter the channel or frequency from the entrypad for use with the UHF radio. Entrypad data range: channel - 0 to 21 (0 used to return to previous frequency and 21 used to select HQ); frequency - 225.000 to 399.975 MHz tunable in 0.025 increments.
L3 (VHF)	Press to enter the channel or frequency from the entrypad for use with the VHF radio. Entrypad data range: channel - 0 to 20 (0 used to return to previous frequency); VHF-FM frequency - 30 to 87.975; and VHF-AM frequency - 108.00 to 173.975 MHz tunable in 0.025 MHz increments.
L4 (Entrypad/Alert)	Standard CDU default pages line key. Refer to paragraph 3-45, CDU Default Pages, for more details.
R1 (PLS)	Press to enter the channel or frequency from the entrypad for use with the PLS radio. Entrypad data range: channel - 1 to 20; frequency - 225.00 to 300.000 MHz tunable in 0.025 increments.
R2 (SURVIVOR ID)	Press to enter the PLS survivor code from the entrypad for system use with the PLS radio for identification. Entrypad data range: 000000 to 999999.
R3 and R4	Not used.
	MFD Page 2
L1 (PLS BRG)	Press to select or deselect the PLS BRG bearing needle on the MFD display.
L2 (INTG BRG)	Press to select or deselect manual interrogation of a survivor radio.
L3 (PLS MAN)	Press to select the PLS mode to be used. Selections available: AUTO, CONT, EMC, HOME, or MAN. AUTO - Automatic interrogations of survivor radio determined by the mission processor. CONT - Activates the continuous mode of the PLS for constant interrogation and guidance information. EMC - Inhibits transmissions. HOME - Continuous monitoring for any UHF transmissions. MAN - Allows manual interrogations and guidance when the L2 (INTG BRG) key is pressed.
L4 (PLS LIST)	Press to access the PLS identification list.
L7 (NEXT)	Press to access page 1 of the radio NAVAIDS control pages.
R1 (FM HMG)	Press to select or deselect the FM homing using VHF radio.
R6 (ENAV F/D)	Press to access the electronic navigation control page.
R7 (RTN)	Press to return to the primary HSD, VSD, or HVR page.
L5, L6, and R2 thru R5	Not used.
	CDU Page 1 and 2
L1 thru L4 and R1 thru R4	Same as CDU pages for radio NAVAID control page 1.

3-137. MFD and CDU Electronic Navigation Control Pages.

The electronic navigation control pages allow selecting the navigation radios to provide bearing/course information to and from radio NAVAIDS (Figure 3-67). Signal indications from these NAVAIDS allow performing IMC takeoffs, flight, and landing. In addition, some NAVAIDS allow pilots to locate downed personnel or refueling aircraft. The radios that provide bearing/course information are: VOR/ILS, TACAN, PLS, and LF/ADF. Access to these pages is primarily provided by a HSD, VSD, or HVR primary control page, then via the NAVAIDS or tactical navigation control page. When an MFD page is accessed and displayed, the respective CDU will also appear.

KEY/LEGEND	FUNCTION
	MFD Page
L1 (CDI VOR, ILS, NRPxx, IBC, or OFF)	Press to select the course deviation indicator (CDI) to be used with the VOR, ILS, TACAN, IBC, or NRP number.
L2 (VOR)	Press to select or deselect VOR mode. ARM will be displayed when activated and not within the capture constraints of the selected course. ARM will change to an asterisk (*) when within the capture criteria.
L3 (VOR TAC)	Press to select or deselect VORTAC mode. ARM will be displayed when activated and not within the capture constraints of the selected course. ARM will change to an asterisk (*) when within the capture criteria.
L4 (ILS)	Press to select or deselect ILS mode. ARM will be displayed when activated and not within the capture constraints of the selected course. ARM will change to an asterisk (*) when within the capture criteria.
L5 (IBC)	Press to select or deselect ILS-BC mode. ARM will be displayed when activated and not within the capture constraints of the selected course. ARM will change to an asterisk (*) when within the capture criteria.
L6 (PLS)	Press to select or deselect PLS mode.
L7 (TNAV F/D)	Press to access the tactical navigation control page.
R1 (TCN)	Press to select or deselect TACAN mode. ARM will be displayed when activated and not within the capture constraints of the selected course. ARM will change to an asterisk (*) when within the capture criteria.
R2 (TCNP)	Press to select or deselect the TACAN point-to-point mode. The TACAN radial and DME distance are specified using the CDU RAD/DME key.
R3 (HDG SEL)	Press to select or deselect the heading select/hold mode. Current aircraft heading is maintained, enter new heading value in CDU to change heading.
R4 (TRK SEL)	Press to select or deselect the track mode. Current aircraft heading becomes aircraft track, enter new track value in CDU to change ground track.
R5 (ADF)	Press to select or deselect the ADF mode.
R6 (NAV AIDS)	Press to access the NAVAIDS control page.
R7 (RTN)	Press to return to the current HSD, VSD, or HVR primary page.

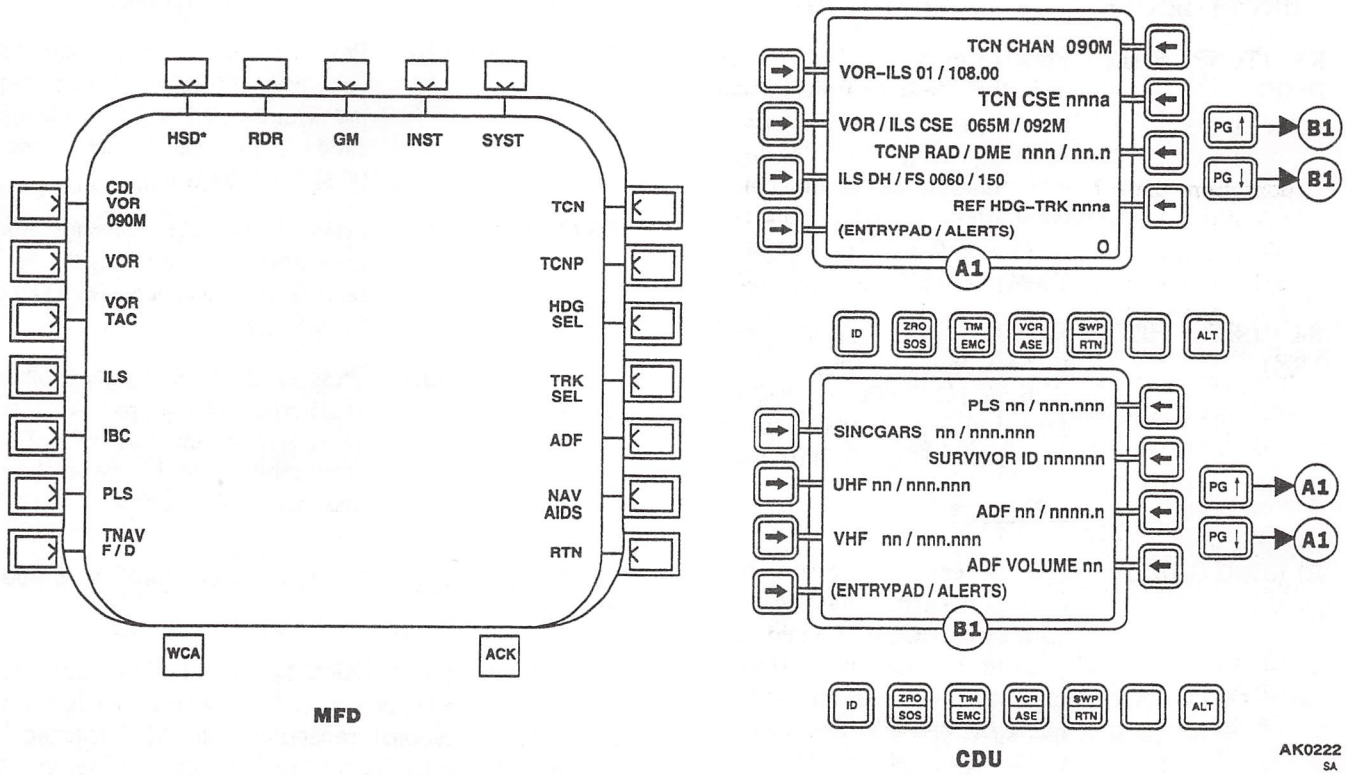

Figure 3-67. Electronic Navigation Control Pages

KEY/LEGEND	FUNCTION
	CDU Page 1
L1 (VOR/ILS)	Press to enter the VOR or ILS frequency from the entrypad for use with the VOR/ILS radio. Entrypad data range: 108.00 to 117.95 MHz.
L2 (VOR/ILS CSE)	Press to enter the VOR and ILS course or VOR and ILS-BC course from the entrypad for use with the VOR/ILS radio to provide course deviation information. Entrypad data range: 000M to 360M or 000T to 360T (000 and 360 are interpreted by the mission processor as the same value).
L3 (ILS DH/FS)	Press to enter the decision height and final approach speed from the entrypad for system use to alert the crew upon reaching decision height and final approach speed. Entrypad data range: DS - 0 to 9999 feet, and FS - 60 to 150 knots.
L4 (Entrypad/Alert)	Standard CDU default pages line key. Refer to paragraph 3-45, CDU Default Pages, for more details.
R1 (TCN CHAN)	Press to enter the TACAN channel from the entrypad for use with the TACAN radio. Entrypad data range: 001x to 126x or 001y to 126y.
R2 (TCN CSE)	Press to enter the TACAN course from the entrypad for use with the TACAN radio to provide course deviation information. Entrypad data range: CSE - 000M to 360M degrees or 000T to 360T degrees.

KEY/LEGEND	FUNCTION
R3 (TCNP RAD/ DME)	Press to enter the TACAN radial and DME distance from the entrypad for system use to alert the crew upon reaching TACAN distance and radial when in the point-to-point mode. Entrypad data range: RAD - 000 to 360 degrees, and DME - 0 to 99.9 nautical miles.
R4 (REF HDG-TRK)	Press to enter the desired heading or track from the entrypad for use with the HDG SEL or TRK mode. Data entry range: 000M to 360M magnetic or 000T or 360T true.
	CDU Page 2
L1 (SINC GARS)	Press to enter the channel or frequency from the entrypad for use with the SINCGARS radio. Entrypad data range: channel - 0 to 20 (0 used to return to previous frequency); VHF-FM frequency - 30 to 87.975 tunable in 0.025 MHz increments.
L2 (UHF)	Press to enter the channel or frequency from the entrypad for use with the UHF radio. Entrypad data range: channel 0 to 21 (0 used to return to previous frequency and 21 used to select HQ); 225.000 to 399.975 MHz tunable in 0.025 increments.
L3 (VHF)	Press to enter the channel or frequency from the entrypad for use with the VHF radio. Entrypad data range: channel 0 to 20 (0 used to return to previous frequency); VHF-FM - 30 to 87.975; and VHF-AM 108.00 to 173.975 MHz tunable in 0.025 MHz increments.
L4 (Entrypad/Alert)	Standard CDU default pages line key. Refer to paragraph 3-45, CDU Default Pages, for more details.
R1 (PLS)	Press to enter the channel or frequency from the entrypad for use with the PLS radio. Entrypad data range: channel 1 to 20; 225.00 to 300.000 MHz tunable in 0.025 increments.
R2 (SURVIVOR ID)	Press to enter the PLS survivor code from the entrypad for system use with the PLS radio for identification. Entrypad data range: 000000 to 999999.
R3 (ADF)	Press to enter the frequency from the entrypad for use with the ADF radio. Entrypad data range: 100.0 to 2999.5 KHz.
R4 (ADF VOLUME)	Press to enter the desired volume value from the entrypad to set the audio level for the ADF radio. Data entry range: 1 to 11, eleven being maximum volume.

3-138. Low-Frequency Automatic Direction Finder Receiver.

The ADF radio (AN/ARN-149) is a low-frequency automatic direction finder (LF/ADF) providing a navigational augmenting directional capability. The ADF antenna is flush mounted under the center of the cockpit. The operating frequency range is 100.0 through 2199.5 KHz, tunable in 0.5 KHz increments for 4,200 channels. The ADF has two functional modes of operation: ANT and ADF. In the ANT mode, the system functions as an aural receiver, providing only an aural output of the received signal. The ADF needle (marked "A") can be selected for display when HSD symbology is being displayed. Lateral guidance can be selected via the electronic navigation control page (by selecting ADF and TRK SEL) for display when VSD symbology is being displayed. Electrical power is supplied from the No.1 dc monitor bus through a circuit breaker marked ADF on the cabin overhead circuit breaker panel.

3-139. ADF MFD and CDU Control Pages.

The ADF primary control functions are located on the MFD radio NAVAIDS control pages (Figures 3-66 and 3-67). The frequency list page allows the pilot to build a list of ADF stations along the flight route (Figure 3-68). Refer to paragraph 3-136, MFD and CDU Radio NAVAIDS Control Pages, for details on the primary control keys of the ADF radio.

NOTE

Before pressing the TUNE ADF key, ensure all other parameters are selected (i.e., ADF TONE, ADF MODE, ADF BRG, etc.) on the MFD NAVAIDS control page. Selecting one of these parameters after the activating the ADF mode will cause the ADF guidance to disengage.

KEY/LEGEND	FUNCTION
	MFD Page
L1 (SEQ▼)	Press to move the pointer down adjacent to the desired channel/ frequency.
L2 (CHAN▲)	Press to move the pointer up adjacent to the desired channel/ frequency.
R1 (TUNE ADF)	Press to tune the ADF radio to the frequency identified by the pointer.
R4 (LOAD COMM)	Press to load or reload the DTM preconstructed communications plan.
R6 (NAV AIDS)	Press to access the radio NAVAIDS control pages.
R7 (RTN)	Press to return to the current HSD, VSD, or HVR primary page.
L3 thru L7, R2, R3, and R5	Not used.
	CDU Page
L1 (ADF FREQ)	Press to enter the frequency from the entrypad for use with the ADF radio. Entrypad data range: 100.0 to 2199.5 KHz, tunable in 0.5 KHz increments.
L2 (IDNT)	Press to select or deselect the ADF identification tones in the pilots helmets.
L4 (Entrypad/Alert)	Standard CDU default pages line keys. Refer to paragraph 3-45, CDU Default Pages, for more details.
L3, and R1 thru R4	Not used.

3-140. Building an ADF Frequency List.

1. Press MFD T1 key to display the HSD, VSD, or HVR primary page.
2. Press MFD R7 (NAV AIDS) to display the radio NAVAIDS control page.
3. Press MFD R5 (ADF) key to display the ADF frequency list page.
4. Press MFD L1 (SEQ▲) or L2 (CHAN▼) key to move pointer adjacent to the channel number to add or modify the ADF frequency and/or identification.
5. Enter new ADF frequency and/or identification into CDU legends and press CDU ENT key.
6. Repeat steps 4. and 5. for each channel as required.
7. Press MFD R7 (RTN) or R6 (NAV AIDS) key to return the primary control page or radio NAV AIDS control page.

3-141. ADF Normal Operation.

Operation instructions are described in paragraph 3-154., Normal Operation for Activating Radio NAVAIDS.

3-142. VOR/ILS/MB Navigation Radio Receiving Set.

The VOR/ILS radio (ARN-123) incorporates VOR/ LOC, glideslope, and marker beacon receivers in the same unit. The VOR/ILS/MB antenna system consists of three sets of antennas. The VOR/LOC antenna consists of two blade type collector elements, one on each side of the fuselage tail cone. The glideslope antenna is mounted under the MMR radome on the nose. The marker beacon antenna is flush mounted underneath the center section of the fuselage. Each receiver operates independently. A failure in one will not affect the performance of the other receivers. The VOR portion generates outputs for left/right course deviations and to/from indications. The ILS portion generates left/right course deviations and glidepath deviations. VSD and HSD symbologies present different perspectives of this information and should be selected as required. The combination of the glideslope and localizer capability makes up the ILS. The VOR receiver is tunable in 0.050 MHz increments over a frequency range of 108.00 through 117.95 MHz. However, the ILS frequency range is between 108.0 and 112.0 MHz, using the odd tenth MHz frequencies. The

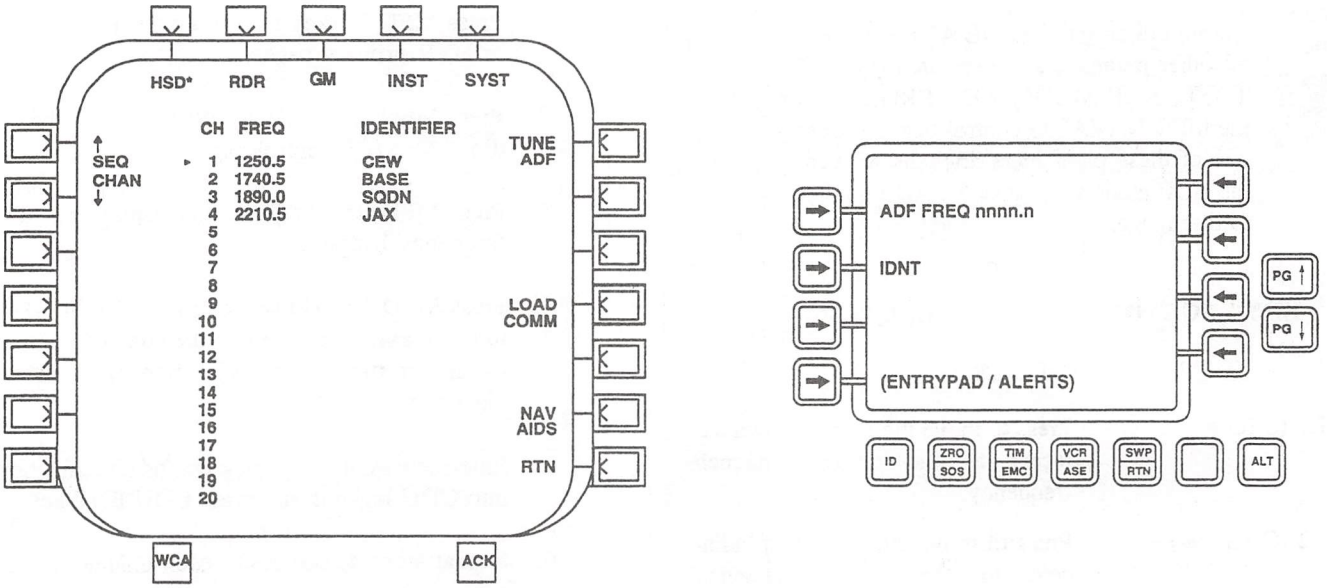

Figure 3-68 MFD and CDU ADF Frequency List Pages

glideslope receiver is paired to the ILS frequencies and tune when an ILS frequency is entered. Glideslope frequencies are between 329.15 and 335.00 MHz. The marker beacon receiver is fixed tuned to a frequency of 75 MHz. Electrical power is supplied by the 26v essential bus and by the No.2 dc monitor bus through circuit breakers marked VOR/ILS on the copilot auxiliary circuit breaker panel and the cabin overhead circuit breaker panel respectively.

a. VOR Navigation. The navigation system provides guidance cues to assist the pilot in staying within the boundaries of the airway and VOR approaches. The VOR needle (marked "V") and CDI can be selected via the radio NAVAIDS control page (by selecting VOR BRG and CDI VOR) for display when HSD symbology is being displayed. Lateral guidance can be selected via the electronic navigation control page (by selecting VOR and TRK SEL) for display when VSD symbology is being displayed. The pilot can select HSD and/or VSD symbology to provide course and CDI information and/or lateral steering guidance. Course information pertaining to the inbound, outbound, or approach path is entered via the CDU. Once course data is entered and CDI VOR and VOR needle is activated, the CDI will provide course deviation information on the HSD if the aircraft is within range and the NAVAID is operational.

b. Instrument Landing System. The ILS provides guidance to track a predetermined course and angle to an airport runway. The ILS incorporates a localizer and glideslope receiver to provide course deviation and glidepath information. When the pilot selects an ILS approach, the ILS course, intercept track, final approach speed, and decision height information should be entered into the CDU. The mission processor uses this information and provides guidance cues to assist the pilot in maintaining the required approach parameters. When the ILS mode is first selected, the MFD R4 (HDG) key will become active and MFD L4 (ILS) key will become armed with the legends appearing as HDG* and ILS ARM. The system heading reference will be automatically set to magnetic. When the pilot flies within the capture criteria of the ILS approach, the LOC CAPTURE and G/S CAPTURE annunciators appear and the heading mode is deselected. In addition, the ILS mode will go active and MFD L4 key legend will display (ILS*). When the decision height altitude entered into the CDU is reached, a DECISION HEIGHT annunciator will appear. At this point the pilot should either land or perform a go-around. However, if the pilot continues to descend below DECISION HEIGHT, upon reaching 50 feet AGL (as determine by the radar altimeter) collective cues will be displayed to allow the pilot to maintain a 50-foot altitude. If radar or barometric altitude hold is engaged prior to glides-

lope capture, either mode will be automatically deactivated and the glideslope data will be displayed. After glideslope capture, selecting one of the altitude hold modes causes the vertical portion of the ILS mode to be overridden, permitting a constant altitude approach on the ILS runway course. Pressing the cyclic DEPART button will effect the GA mode as described under paragraph 3-128, Approach/Go-Around (GA) Mode. Pressing MFD L4 (ILS) key when the ILS is active will deactivate the ILS mode. The ILS mode will automatically deactivate when another lateral guidance mode is activated. A failure of either the localizer or glideslope will not affect the guidance information provided by the other. The mission processor converts localizer back course indications to reflect normal localizer approach indications.

c. Marker Beacon. The marker beacon provides an audio oscillating tone when the aircraft crosses over the outer marker, middle marker, and inner marker. The outer, middle, and inner markers are transmitters which radiate radio signals in an oval pattern upward and requires an aircraft to fly almost directly over the marker beacon to receive the signal. Normally, the outer marker coincides with the final approach fix for nonprecision approaches, the middle marker alerts pilot that the aircraft is approaching decision height during an ILS approach, and the inner marker identifies the aircraft is 100 feet above the touchdown zone elevation during a precision approach.

d. VORTAC Mode. The VORTAC mode using the VOR and TACAN radio receivers provides guidance to a VORTAC station. Paired VOR and TACAN frequencies can be tuned when this mode is active. Selecting and tuning a VOR frequency will automatically tune the TACAN frequency when this mode is active. Lateral guidance is provided via the VOR receiver and distance is provided by the TACAN receiver. If one of the two receivers or stations becomes inoperative, the system will provide guidance as if only the one operating mode was selected.

3-143. VOR/TCN MFD and CDU Control Pages.

The VOR and TACAN primary control functions are located on the MFD radio NAVAIDS control pages (Figures 3-66 and 3-67). The frequency list page allows the pilot to build a list of VOR and TACAN stations along the flight route (Figure 3-69). Refer to paragraph 3-136, MFD and CDU Radio NAVAIDS Control Pages, for details on the primary control keys of the VOR and TACAN radios.

KEY/LEGEND	FUNCTION
	MFD Page
L1 (SEQ▼)	Press to move the pointer down adjacent to the desired channel/ frequency.
L2 (CHAN▲)	Press to move the pointer up adjacent to the desired channel/ frequency.
L5 (VOR TAC PAIR)	Press to select or deselect automatic VOR and TACAN tuning when either the channel or frequency is entered for a VORTAC NAVAID.
R1 (TUNE VOR)	Press to tune the VOR radio to the frequency identified by the pointer.
R2 (TUNE TCN)	Press to tune the TACAN radio to the frequency identified by the pointer.
R4 (LOAD COMM)	Press to load or reload the DTM preconstructed communications plan.
R6 (NAV AIDS)	Press to access the radio NAVAIDS control pages.
R7 (RTN)	Press to return to the current HSD, VSD, or HVR primary page.
L3, L4, L6, L7, R3, and R5	Not used.
	CDU Page
L1 (VOR-ILS FREQ)	Press to enter the frequency from the entrypad for use with the VOR radio. Entrypad data range: 108.000 to 117.950 MHz (VOR/ILS).
L2 (TCN CHAN)	Press to enter the frequency from the entrypad for use with the TACAN radio. Entrypad data range: 001X to 126X or 001Y to 126Y (TACAN channel).
L3 (IDNT)	Press to select or deselect the VOR or TACAN identification tones in the pilots helmets.

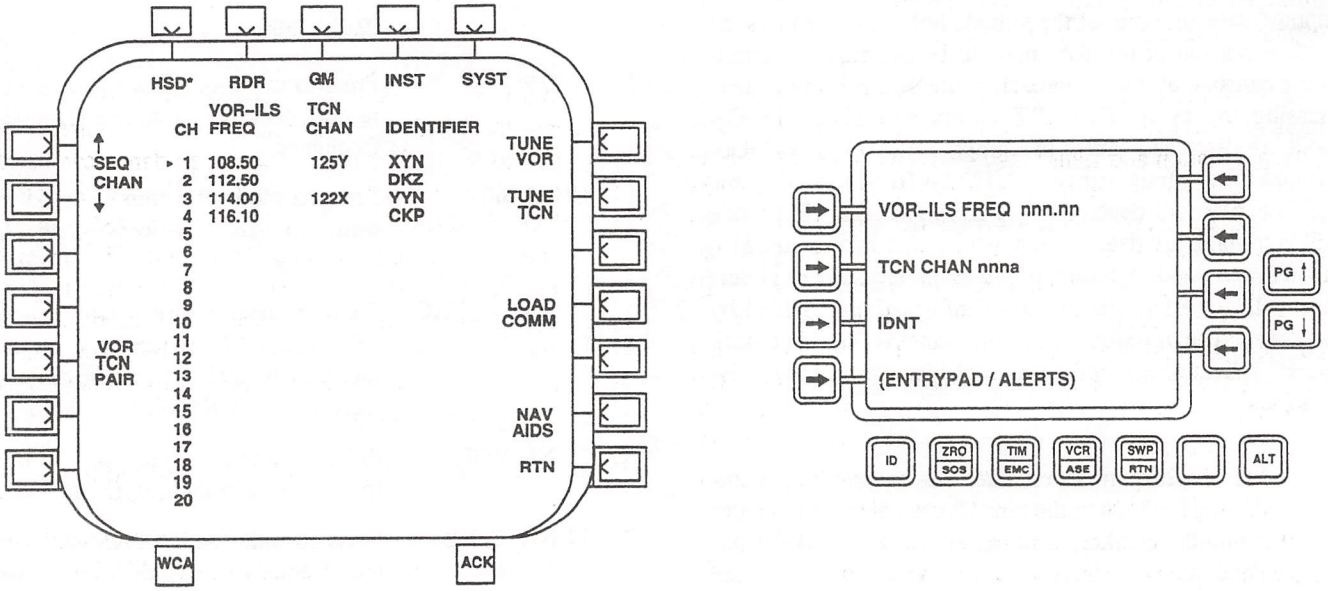

Figure 3-69. MFD and CDU VOR/TACAN Frequency List Pages

KEY/LEGEND	FUNCTION
L4 (Entrypad/Alert)	Standard CDU default pages line key. Refer to paragraph 3-45, CDU Default Pages, for more details.
R1 thru R4	Not used.

3-144. Building a VOR and TACAN Frequency List.

1. Press MFD T1 key to display the HSD, VSD, or HVR primary page.
2. Press MFD R7 (NAV AIDS) to display the radio NAVAIDS control page.
3. Press MFD L6 (VOR TCN LIST) key to display the ADF frequency list page.
4. Press MFD L1 (SEQ▲) or L2 (CHAN▼) key to move pointer adjacent to the channel number to add or modify the VOR frequency, TACAN channel, and/or identification.
5. Enter new VOR frequency, TACAN channel, and/or identification into CDU legends and press CDU ENT key.
6. Repeat steps 4. and 5. for each channel as required.
7. Press MFD R7 (RTN) or R6 (NAV AIDS) key to return the primary control page or radio NAV AIDS control page.

3-145. VOR/ILS/MB Normal Operation.

Operation instructions are described in paragraph 3-154, Normal Operation for Activating Radio NAVAIDS.

3-146. Tactical Air Navigation Transmitter/Receiver.

The ARN-118 provides slant range and bearing to a TACAN station. In addition to range and bearing information, air-to-air ranging between two TACAN equipped aircraft, and TACAN point-to-point navigation is available. One TACAN antenna is located on the bottom center fuselage area and the other antenna is located on the nose area. The operating frequency range is 962 through 1213 MHz for 252 (126X and 126Y) channels. The X channels use a single frequency for transmitting and two different frequencies for receiving. The Y channels use one frequency to transmit and another frequency to receive. Electrical power is supplied from the No.1 ac primary bus through a circuit

breaker marked TACAN and from the No.1 dc primary bus through a circuit breaker labeled TACAN RLY, both on the cabin overhead circuit breaker panel.

a. TACAN Transmit/Receive Mode (T/R). The T/R mode provides direction and/or course guidance to a ground TACAN station and slant range. The TACAN mode can be turned on from the electronic navigation control page. Once the desired course is selected, a track required for a 30 degree intercept is automatically computed. This track can be changed as long as the intercept angle remains below 90 degrees. Upon data entry, the track mode will become active and the TACAN mode will arm. The system heading reference will be automatically set to magnetic. The TACAN needle (marked "T") can be selected via the radio NAVAIDS control page (by selecting TCN BRG and CDI TACAN) for display when HSD symbology is being displayed. The TACAN mode uses the bearing signal to derive CDI information. Lateral guidance can be selected via the electronic navigation control page (by selecting VORTAC/TCN and TRK SEL) for display when VSD symbology is being displayed. The pilot can select HSD and/or VSD symbology to provide bearing and CDI information and/or lateral steering guidance. The TACAN mode may be manually deactivated by pressing the TCN ARM or TCN* keys.

b. TACAN Receive Mode (RCV). The RCV mode provides direction and/or course guidance to a ground TACAN station. This mode provides all of the information described under the transmit/receive mode except slant range.

c. TACAN Air-to-Air Transmit/Receive Mode (AATR). The AATR mode interrogates a suitably equipped cooperating aircraft. The AATR mode receives and calculates slant range and bearing to the suitably equipped cooperating aircraft. On cooperating aircraft not equipped with bearing producing equipment, only slant range is calculated. In this mode, the TACAN system provides replies to other aircraft when interrogated.

NOTE

There must be at least 63 channels between the receive and transmit channels use during TACAN air-to-air mode of operation.

d. TACAN Air-to-Air Receive Mode (A/AR). The A/AR mode provides direction and/or course guidance to a suitably equipped cooperating aircraft. This mode provides all of the information described under the air-to-air transmit/receive mode except slant range.

e. Emissions Control Mode (EMC). The EMC mode inhibits TACAN transmissions.

f. TACAN Point-to-Point (TCNP) Guidance. The TCNP mode provides guidance to a selected TACAN radial and DME point. The TCNP mode is requested by pressing MFD key R2 (TCNP) on the electronic navigation control page. When the desired TACAN radial and DME distance is entered the TCNP mode becomes active and directs the helicopter to the desired point. Lateral guidance can be selected via the electronic navigation control page (by selecting TCNP and TRK SEL) for display when VSD symbology is being displayed. The TCNP will provide guidance until the desired point is reached; TCNP* point-to-point mode will then be deactivated. The TCNP mode may be manually deactivated by pressing the TCNP* key. TCNP will be automatically deactivated when any other lateral guidance mode is activated.

3-147. TACAN and VORTAC Normal Operation.

Operation instructions are described in paragraph 3-154, Normal Operation for Activating Radio NAVAIDS.

3-148. Personnel Locator System (PLS).

The ARS-6(V)3 personnel locator system (PLS) provides the pilot with heading and distance information to locate survivors with a transmitting AN/PRC-112A(V) survival radio set. The PLS consists of a receiver/transmitter RT-1532A/ARS-6(V), an antenna switching unit SA-2563/ARS-6(V), and two antennas. The two PLS antennas are mounted on the bottom of the fuselage. The PLS can also provide heading information to any source of continuous wave UHF (bi-phase) signals within its operating range and provide two-way UHF voice communication. The unit operates in the UHF frequency range between 225 and 300 MHz and is tunable in 25 KHz increments. If the ID codes in the survival radio match the ID codes being transmitted by the aircraft, a reply is transmitted from the survival radio. This reply is interpreted by the PLS, allowing calculation of the heading and range information to the survival unit. The PLS can store up to 20 different survivor ID codes. NRP 95 on the navigation reference table is reserved for a PLS location. The PLS has a line-of-sight operating range up to 60 nautical miles in all modes except DME (DME is not available in homing mode). The range error is less than 1% and the azimuth error is less than ±4 degrees with a final location accuracy within approximately 50 feet of the survivor transmitter. Power for the PLS is provided by the No.1 dc primary bus through a circuit breaker labeled PLS on the cabin overhead circuit breaker panel.

a. Automatic Mode. When PLS auto mode is selected, the mission processor will initially command the receiver/transmitter into the continuous mode. When valid range and bearing are received, the bearing needle will appear on the HSD if it has been activated from NAVAIDS page 2.

Due to PLS angular measurement inaccuracies, the bearing needle may be unstable initially. DME will be displayed in feet if the range to the survivor is less than 5000 feet, and will be displayed in nautical miles and tenths of nautical miles up to 99.9 nm, when above 5000 feet. With PLS ENAV guidance active, the lateral steering portion of the command plane symbol will appear along with the PLS guidance mode annunciator. The lateral steering cue will command the operator to steer the aircraft in the direction of the transmitter at no greater than 10 degrees roll angle of bank or a standard rate turn, whichever is less. When the aircraft heading is within 5° of the survivor, a psuedo NRP is generated at 10 nm from the aircraft, on a ground track to the survivor within the 5° window. While providing guidance to the psuedo NRP, and providing range and bearing to the survivor, once 13 out of 15 valid interrogations have been received, the IAP will start NRP processing and look for an additional 15 valid interrogations while covering 6% of the distance from the current aircraft position to the survivor. When the survivor is behind the aircraft, the PLS bearing needle on the HSD cannot resolve to/from direction. The 15 valid interrogations while covering 6% of the distance from the current aircraft position to the survivor is used to resolve to/from ambiguity. However, there is a potential that the lateral steering cue may drive the aircraft on a turn toward the survivor, PLS DME distance will be increasing and the bearing pointer will be pointing away from the survivor. The turn toward the survivor will be commanded at no greater than 10° angle of bank. Operator override of this command limitation will not affect accuracy during this phases until within 15° of the survivor. Once these conditions have been met (15 valid interrogations while covering 6% of the distance from the current aircraft position to the survivor), time to go (TTG) and distance to go (DTG) will be displayed in the upper right hand corner of the HSD. The time to go and distance to go will be for the interim NRP. The actual NRP location will not be displayed on the HSD until 5 consecutive interrogation replies are received with the aircraft heading within 3° of the survivor. Once NRP 95 is displayed on the HSD, continuous interrogations will cease. NRP 95 coordinates are now entered into the NRP table in position 95 and guidance is switched to the actual NRP instead of the interim, the default tag for NRP 95 is PLS. The mission processor will command the receiver to generate 1 set of burst, then 1 set of burst for each nautical mile thereafter, until within 2 nm of the survivor. Once the aircraft is within 2 nm of the survivor, the PLS will be commanded into the continuous mode and will reduce it's power output level from 10 watts to 100 milliwatts. When within 2000 feet of the survivor, updates of NRP 95 will cease and the position of NRP 95 will freeze.

b. Manual Mode. The Manual mode operates essentially the same as the auto mode except the burst is generated by the pilot. When a burst is required, A PLS DATA STALE ALERT operator message is generated by the IASS. The operator will continuously see the PLS DATA STALE ALERT operator message until PLS NRP 95 is generated and displayed. Once NRP 95 is generated, the operater alert message will be displayed each nautical mile traveled thereafter when a burst is required to update the NRP 95 range and bearing data. The manual mode should be used if voice communications are required. Voice communications are not allowed while the system is generating interrogations.

c. Continuous Mode. This mode provides constant interrogations to the survivor's radio.

d. EMC Mode. The EMC mode prevents transmissions during electronic countermeasure operations.

e. Homing Mode. PLS homing mode provides voice communications and bearing information to/from the tuned UHF radio source. Bearing indications greater than 25° off the nose of the helicopter should be used for turning direction only. The pilot must determine by signal strength/ sound or the aid of the radio source operator, if the direction is to or from the radio source location. If constant transmissions from the radio source operator is not possible, request short transmissions as necessary to identify radio location.

3-149. PLS MFD and CDU Control Pages.

The PLS primary control functions are located on the MFD radio NAVAIDS control page 2 (Figures 3-66 and 3-67). Activation of the system is mainly performed through the controls on the PLS frequency list pages. The frequency list page allows the pilot to build a list of possible survivors (Figure 3-70). Refer to paragraph 3-136, MFD and CDU Radio NAVAIDS Control Pages, for details on the primary control keys of the PLS radio.

KEY/LEGEND	FUNCTION
	MFD Page
L1 (SEQ▼)	Press to move the pointer down adjacent to the desired channel/ frequency.

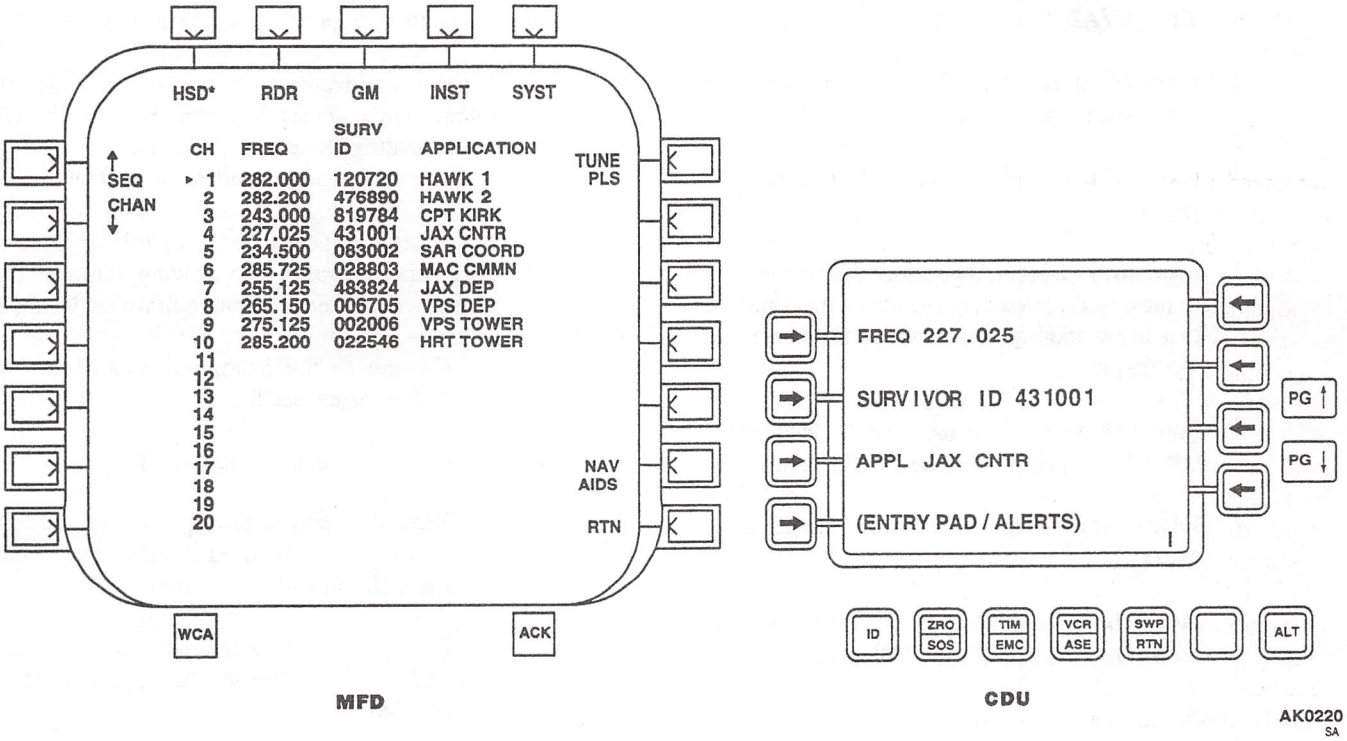

Figure 3-70. MFD and CDU PLS Frequency List Pages

KEY/LEGEND	FUNCTION
L2 (CHAN▲)	Press to move the pointer up adjacent to the desired channel/ frequency.
R1 (TUNE PLS)	Press to tune the PLS radio to the frequency and survivor ID code identified by the pointer.
R6 (NAV AIDS)	Press to access the radio NAVAIDS control pages.
R7 (RTN)	Press to return to the current HSD, VSD, or HVR primary page.
L3 thru L7 and R2 thru R5	Not used.
	CDU Page
L1 (FREQ)	Press to enter the frequency from the entrypad for use with the PLS radio. Entrypad data range: 225.000 to 300.000 MHz.
L2 (SURVIVOR ID)	Press to enter the PLS survivor code from the entrypad for system use with the PLS radio for identification. Entrypad data range: 000000 to 999999.
L3 (APPL ananan-anan)	Press to enter the name/identifier from the entrypad for use with the PLS channel/frequency. Entrypad data range: maximum of 11 alphanumeric characters.
L4 (Entrypad/Alert)	Standard CDU default pages line key. Refer to paragraph 3-45, CDU Default Pages, for more details.
R1 thru R4	Not used.

3-150. Building a PLS Frequency List.

1. Press MFD T1 key to display the HSD, VSD, or HVR primary page.

2. Press MFD R7 (NAV AIDS) to display the radio NAVAIDS control page.

3. Press MFD L7 (NEXT) key to display radio NAVAIDS control page 2.

4. Press MFD L4 (PLS LIST) key to display PLS page.

5. Press MFD L1 (SEQ▲ or L2 (CHAN▼) key to move pointer adjacent to the channel number to add or modify the survivor frequency and identification.

6. Enter new survivor frequency and identification into CDU legends and press CDU ENT key.

7. Repeat steps 4. and 5. for each channel as required.

8. Press MFD R7 (RTN) key to return the HSD, VSD, or HVR primary control page.

3-151. PLS Normal Operation.

This procedure should be utilized to establish and maintain a survivor's NRP during automatic, continuous, EMC, or manual mode of operation for the PLS radio. The IASS handles interrogation for all modes except manual. Interrogations for the manual mode is initiated by the pilot when the PLS DATA STALE ALERT operator message is displayed. Bank angles greater than 10° may cost loss of survivor radio reply and prolong locating survivor. Utilize the following technique when location a survivor; interrogations must be performed by the pilot if using manual mode:

1. Activate PLS needle per paragraph 3-154, Normal Operation for Activating Radio NAVAIDS.

2. Set PLS mode to CONT and increase altitude up to maximun safe limit (threat or operating) until PLS needle appears.

NOTE

If disparity exists between the PLS bearing needle and PLS guidance cue, better performance will be achieved by following the PLS bearing needle.

Until NRP 95 is generated, the PLS bearing needle may point away for the survivor while PLS guidance is directing a turn. If DME information is increasing, the pilot should turn in the direction of the PLS guidance cue and attempt to satisfy the next step.

3. When the to/from check is complete, NRP 95 (actual not interim) will appear when the aircraft heading is within 3° and 5 consecutive bursts have been received.

4. If the crab angle exceed 5° while enroute to NRP 95, perform the following estimate improvement procedure when 6 nm form NRP 95:

   a. Change to the heading indicated by the PLS bearing needle.

   b. Change PLS mode to CONT.

   c. While bursting continuously, vary aircraft heading +10° and -10° one time while maintaining roll below 10°.

   e. If NRP 95 moves laterally, turn onto the updated PLS needle and repeat steps a. through e.

   f. If NRP remains stable, reset the PLS to the desired mode AUTO, MAN, or CONT.

NOTE

Step 4. estimate improvement procedure may be performed again to refined PLS information if desired.

5. Follow directions provided by the PLS guidance cue, adjust airspeed and altitude as required.

6. When within 2 nm, descend to lowest altitude while maintaining line of sight interrogations and continue to follow guidance cue.

3-152. FM-Homing.

FM-homing capability uses the VHF radio in the FM mode. The FM-homing guidance mode can be used to obtain lateral steering to a selected FM station (Figure 3-71). The mode is activated from the radio NAVAIDS control page. The VHF radio must be on and tuned to an FM frequency before the FM HMG key is displayed on page 2 of the radio NAVAIDS control pages. Guidance symbology for this mode can only be obtained from an MFD when the HSD symbology is in the centered and heading up orientation. The information provided by this mode generates lateral steering cues and a relative signal strength indication.

Normally, as the signal strength indicator moves downward on the top bar the pilot is approaching the homing station; and, as the signal strength indicator moves upward the aircraft is going away from the homing station. However, flying through certain atmospheric conditions may give the appearance that you are going away from the homing station when in actually you are going toward the station or going toward the homing station when in actually you are going away from the station. Left or right guidance is determine by the position of the bar in respective to the aircraft symbol.

3-153. FM-Homing Normal Operation.

Operation instructions are described in paragraph 3-154, Normal Operation for Activating Radio NAVAIDS.

3-154. Normal Operation for Activating Radio NAVAIDS.

Radio NAVAIDS provide guidance cues similar to those generated by the flight director. Refer to the HSD, VSD, or HVR symbology pages for symbol appearance for the different NAVAIDS. The primary control for the NAVAIDS receivers are on the radio NAVAIDS and electronic navigation control pages. The pilot may activate more than one lateral guidance needle on an HSD display; however, only one can be selected to provide guidance cues on the VSD display. MFD controls may be accessed by the collective and cyclic controls. Refer to paragraph 3-13, Cyclic and Collective Grips MFD Controls, for more details if required. Declutter levels should be set prior to performing this procedure. The PLS frequency list page should have all required entries prior to performing this procedure if use of the PLS is expected. The following procedures describe the use of the MFD and CDU to activate a radio NAVAID receiver and guidance.

a. HSD Bearing Needle(s) Activation.

(1) Power on the NAVAID radio(s) using the procedures outlined under the equipment status pages as required.

(2) Press MFD T1 key to display an HSD primary page.

(3) Press MFD L1 (DCLT) key for desired declutter level.

(4) Press MFD R7 (NAV AIDS) to display the radio NAVAIDS control page.

(5) On the CSC panel, push NAV A and B switches in and adjust to a comfortable audio level.

(6) To activate the VOR needle, perform the following:

(a) Enter the VOR frequency into the CDU under L1 (VOR-ILS) key.

(b) Press CDU L3 (MB SENS) key to select HI or LO for marker beacon sensitivity.

(c) Press MFD L2 (VOR BRG) key to display the VOR needle on an HSD.

(7) To activate the TCN needle, perform the following:

(a) Enter the TACAN channel into the CDU under R1 (TCN CHAN) key.

(b) Press MFD L3 (TCN BRG) key to display the TCN needle on an HSD.

NOTE

Before pressing the TUNE ADF key, ensure all other parameters are selected (i.e., ADF TONE, ADF MODE, ADF BRG, etc.) on the MFD NAVAIDS control page. Selecting one of these parameters after the activating the ADF mode will cause the ADF guidance to disengage.

(8) To activate the ADF needle, perform the following:

(a) Enter the ADF frequency into the CDU under R3 (ADF) key.

(b) Press MFD R1 (ADF BRG) key to display the ADF needle.

(c) Check ADF as follows with a frequency of the station with range entered:

1 Press MFD R2 (ADF MODE) key to test ANT or ADF mode. ANT mode provides maximum audio and ADF needle should be horizontal to station. In the ADF mode, the ADF needle points toward the station.

2 Press MFD R3 (ADF TONE) to select or deselect a continuous tone (1 KHz) which identifies the presence of a continuous wave signal. Tone should be

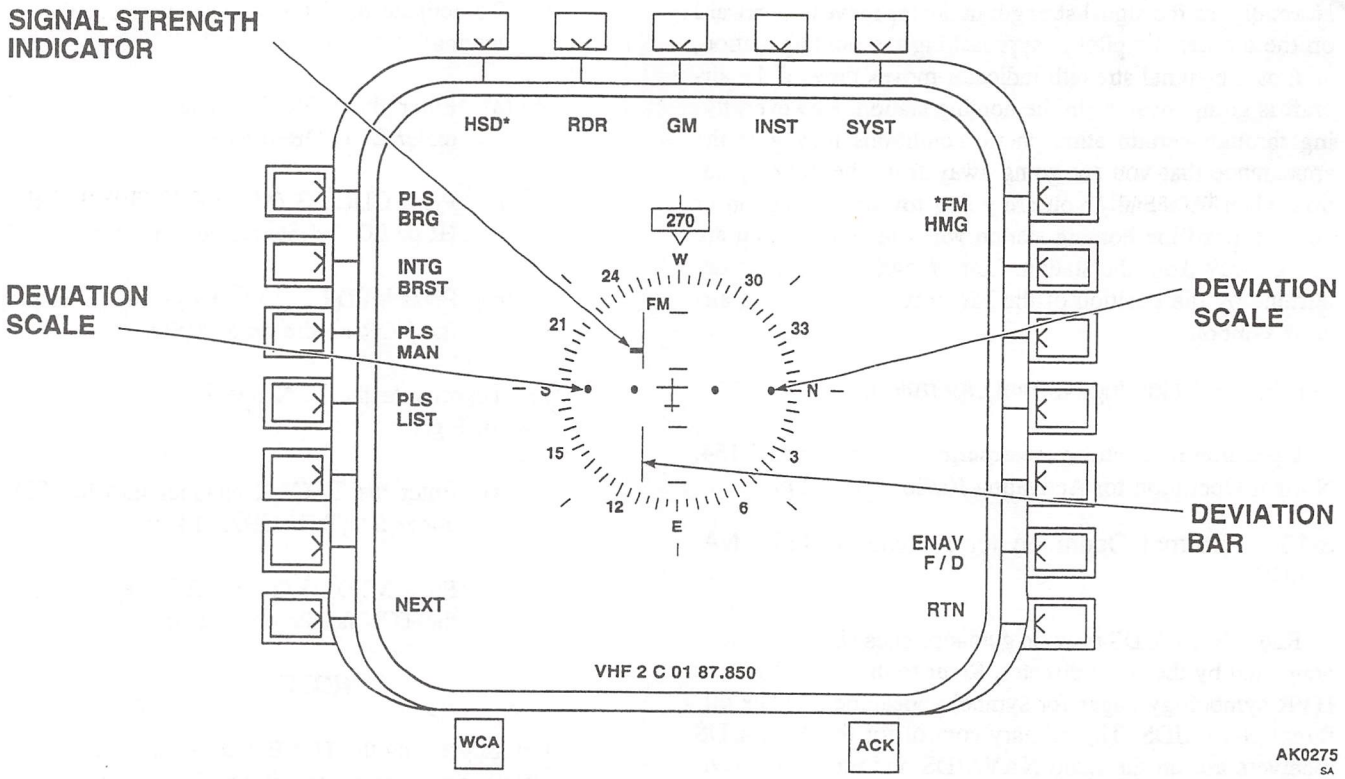

Figure 3-71. FM-Homing Symbology

heard in headset if on, and CSC panel controls are properly set.

3 Press MFD R4 (ADF IDNT) key to identify the station identification tones. Identification tones should be heard in headset if on and CSC panel controls are properly set.

(9) To activate TACAN capabilities, press MFD L4 key until the desired mode is displayed (TCN AATR, A/AR, T/R, RCV, or EMC).

(10) To activate VORTAC pair tuning, press MFD L5 (VORTAC PAIR) key. Entering the VOR frequency will tune both radios. Entering the TACAN channel will not tune the associated VOR frequency.

(11) To activate the CDI indicators for the VOR, ILS, TCN, IBC, or an NRP, press MFD L1 (CDI) key. Off can be selected also. The course entered for the lateral guidance mode is also display adjacent to L1 key.

(12) To activate the PLS needle and mode, perform the following:

(a) On the CSC panel, push RADIO NAV No.5 switch in and adjust to a comfortable audio level.

(b) Set mode selector switch to position 5.

(c) On AUX ICS control panel, press GND/ PLS switch to turn PLS on (PLS legend will light).

(d) Press MFD L7 (NEXT) key to display radio NAVAIDS control page 2.

(e) Enter the PLS frequency and survivor identification into CDU page 2 under R1 (PLS) key and R2 (SURVIVOR ID) or select using frequency list page.

(f) Press MFD L1 (PLS BRG) key to display the PLS needle.

(g) Press MFD L3 key to activate desire mode (AUTO, CONT, EMC, HOME, or MAN).

NOTE

The VHF radio must be on before the FM HMG key appears on NAVAIDS control page 2. After activating the FM homing mode, the MFD must have HSD symbology displayed in the centered and heading up modes before FM homing guidance is available.

(13) To activate FM homing, perform the following:

(a) Select the appropriate FM frequency on the VHF radio. Refer to VHF radio procedures as required, then return to this step.

(b) Press MFD R1 (FM HMG) key.

(c) Request long and short counts as required to maintain signal information for guidance cues.

b. VSD Guidance Cues.

NOTE

Some modes are not available when another mode is active while other modes are deactivated when another mode becomes active. Refer to Figure 3-49, Guidance Modes Matrix for additional details.

(1) Power on the NAVAID radio(s) using the procedures outlined under the equipment status pages as required.

(2) Press MFD T1 key to display a VSD primary page.

(3) Press MFD L1 (DCLT) key for desired declutter level.

(4) Press MFD R7 (NAV AIDS) to display the radio NAVAIDS control page.

(5) Press MFD R6 (ENAV F/D) key to display the electronic navigation page.

(6) To activate the VOR mode to provide guidance cues on the VSD, press MFD L2 (VOR) key.

(7) To activate the VORTAC mode to provide guidance cues on the VSD, press MFD L3 (VORTAC) key.

(8) To activate the ILS mode to provide guidance cues on the VSD, press MFD L4 (ILS) key.

(9) To activate the IBC mode to provide guidance cues on the VSD, press MFD L5 (IBC) key.

(10) To activate the PLS mode to provide guidance cues on the VSD, press MFD L6 (PLS) key.

(11) To activate the TACAN mode to provide guidance cues on the VSD, press MFD R1 (TCN) key.

(12) To activate the TACAN mode point-to-point mode to provide guidance cues on the VSD, press MFD R2 (TCNP) key.

(13) To activate the heading select mode to provide guidance cues on the VSD, press MFD R3 (HDG SEL) key.

(14) To activate the TRK mode to provide guidance cues on the VSD, press MFD R4 (TRK) key.

NOTE

Before pressing the TUNE ADF key, ensure all other parameters are selected (i.e., ADF TONE, ADF MODE, ADF BRG, etc.) on the MFD NAVAIDS control page. Selecting one of these parameters after the activating the ADF will cause the ADF guidance to disengage.

(15) To activate the ADF mode to provide guidance cues on the VSD, press MFD R5 (ADF) key.

(16) To activate the CDI indicators for the VOR, ILS, TCN, IBC, or an NRP, press MFD L1 (CDI) key. Off can be selected also. The course entered for the lateral guidance mode is also displayed adjacent to L1 key.

3-155. Flight Director Update and Store Control Pages.

The update and store capabilities use sensor systems, NAVAIDS, and flyover to update positioning system data accuracy and to store grid locations for future reference. Sensor systems include the FLIR, MMR, and map display generator. The NAVAIDS include the VORTAC and TACAN stations and are not used when performing a store operation. An update is performed using a known location/

Table 3-9. Target Cursor Display Matrix

PRIMARY CONTROL PAGE	FLIR	MAP/LOOK AHEAD	RADAR
	MAN, FWD, AVT, BORE	PLAN CHART	GM, TA, TF/TA, TF/GM
VSD/HVR FLIR	X		
HSD MAP		X	
HSD RDR			X

Notes:

Primary control page is defined as a display which has slew active.

Secondary control page is defined as a display which does not have slew active.

Primary control page - The target cursor is displayed on the primary control pages listed in the above matrix.

Secondary control page:

If the primary control page video is off, then the target cursor is also displayed on any secondary control page which also has video off and meets the follwoing criteria: The control page is the same as the primary control page as defined by the T1, T2, and T3 keys. (T2 key may be used to remove the target cursor from an MFD.)

If the primary control page video is on, then the target cursor is displayed on any secondary control page which meets the following criteria: the control page is the same as the primary control page as defined by T1, T2, and T3 keys; and the video on/off key is used to display/remove the target cursor.

landmark with known coordinates. A store is performed by creating an NRP for a grid location, and once stored, the location is accessed as a normal NRP.

3-156. Updating Positioning System Data.

NOTE

When an NRP update or an NRP store page is being displayed on an MFD and the Waypoint mode is active, the CDU page associated with the NRP update or NRP store will display the destination NRP for the current flight plan leg. As long as the NRP update or the store page is being displayed, the CDU page will continue to display that NRP until the NRP update or the NRP store is completed or deselected.

A sensor system, TACAN station, VORTAC station, or flyover can be used to update the positioning system. Manual updates are not allowed if the system is utilizing GPS modes or the terrain reference navigation mode. All other positioning systems require periodical updates. Flyover updates can be of any known landmark in which known coordinates are available. Sensor systems use mission processor calculations which apply ranging data, aircraft height above ground, and sensor pointing angles to derive the coordinates of the location identified by the target cursor. An update location (landmark or NAVAID) that is used must be entered as an NRP prior to performing the update. Sensor systems' basic operating procedures are described in Chapter 4. The pilot accepts or rejects update information after looking at the bearing and range delta data between the target cursor location and the computer location of an updated NRP. Verify NRP coordinates or target cursor location if delta data is excessively large. A smaller bearing and range delta values means the more accurate the positioning system. The target cursor is only displayed while on the control page and the sensor mode listed in Table 3-9 is active.

3-157. Update MFD and CDU Control Pages.

The update control pages allow updating the current positioning system information to eliminate any drift errors developed while flying from the previous update location or initialization point (Figure 3-72). Updates can be performed using the FLIR, MMR, and MAP. Once the update function

key is pressed, the same page reappears except L2 (ACC) and L3 (REJ) keys replace the previous L2 (OMEG UPD) and L3 (VORTAC UPD) keys.

KEY/LEGEND	FUNCTION
	MFD Page (FLIR, MMR, MAP Plan, or MAP Chart)
L1 (DCLT 1, 2, or 3)	Press to select the desired declutter level.
L2 (OMEG UPD)	Not used (equipment not available).
L2 (ACC)	Press to accept the bearing and range data displayed at the bottom of the MFD. The data represents the difference between the system's calculated present position and the actual present position coordinates.
L3 (VORTAC UPD)	Press to perform a VORTAC update. Updating calculations are based on the NRP entered in the CDU for the VORTAC station.
L3 (REJ)	Press to reject the bearing and range data displayed at the bottom of the MFD.
L4 (SNSR UPD) (not available for map PHOTO and 3D modes)	Press to perform a sensor update (FLIR, MMR, or MAP). Normally, when this type of update is performed, this page is accessed from the sensor system control page and the update would be based on that system sensor data.
L5 (SLEW)	Press to enable track handle thumb switch to move that MFD's target cursor and/or move the FLIR/MMR antenna to the MFD's target cursor, or center the target cursor on the MFD's map display.
L6 (A/C CRSR)	Press to display aircraft bearing and range to the target cursor location. Data will be displayed at the bottom of the MFD.
L7 (PT CRSR)	Press to display bearing and range from an initial point to the target cursor. Select initial point with target cursor, press L7 key to activate point-to-cursor; when target cursor moves, bearing and range information is displayed from the initial point to the target cursor. Data will be displayed at the bottom of the MFD.
R1 (AGR REJ) (FLIR mode only)	Press to reject the range data provided by the MMR when used with FLIR system. When range data is suspected to be wrong for the selected target, this normally means the pilot has the target cursor on the wrong image.
R2 (FOV) (FLIR mode only)	Press to select wide or narrow field of view (FOV) for the FLIR system.
R2 (FOV 30, 60, 90 and 120) (MAP PHOTO and 3D modes only)	Press to toggle between the range values for the MAP PHOTO and 3D modes display area. Selections available: 30, 60, 90, and 120 miles.
R2 (RNG▲) (MMR, MAP PLAN, and MAP CHART only)	Press to toggle to a smaller range value for the map and radar MFD display area. Selections available: 1, 3, 5, 10, 30, and 45 miles.
R3 (BALT, RALT AGR, or AZ RNG) (FLIR mode only)	Press to select the computing method used to determine slant range to the updated NRP. AGR - Uses air-to-ground range returned by the MMR. This method is most accurate but is not available while TF guidance is active.

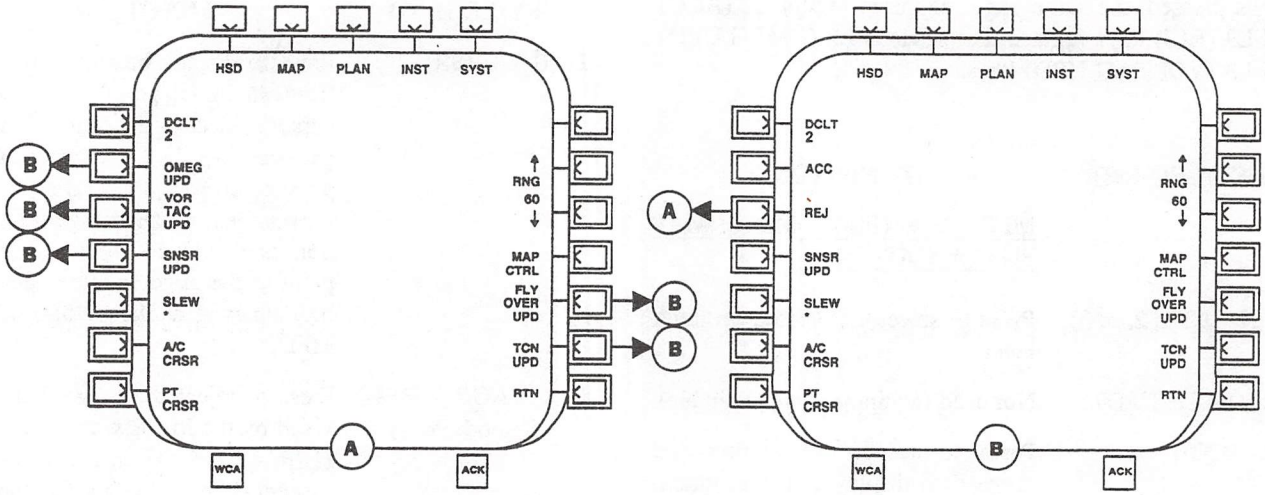

NO UPDATE
MAP PAGE 1

UPDATE
MAP PAGE 2

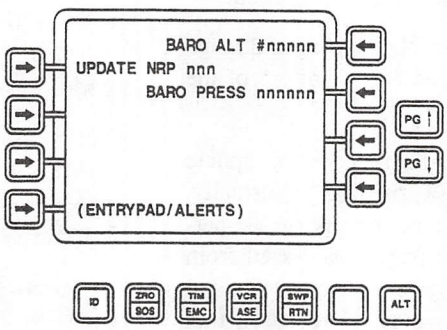

CDU DEFAULT PAGE

AK0135_1
SA

Figure 3-72. Update Control Pages (Sheet 1 of 2)

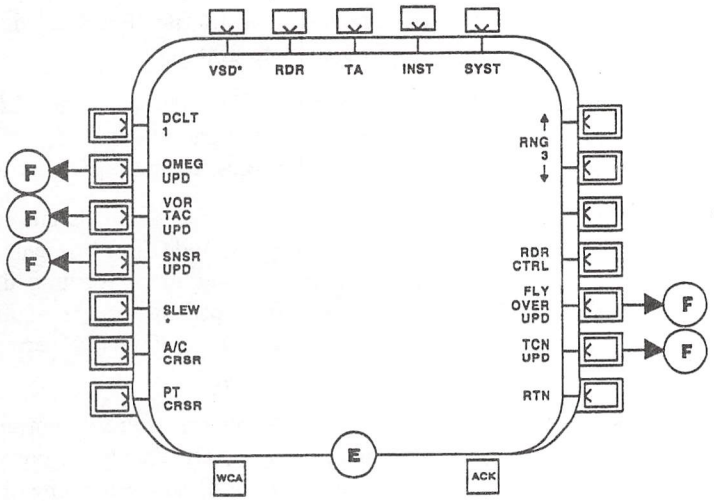

NO UPDATE
RADAR PAGE 1

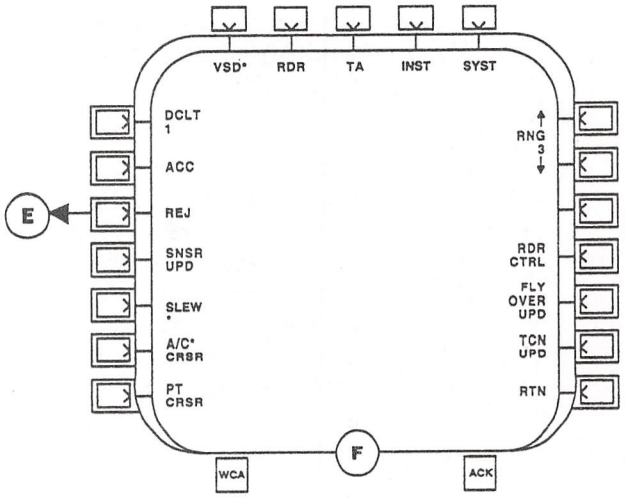

UPDATE
RADAR PAGE 2

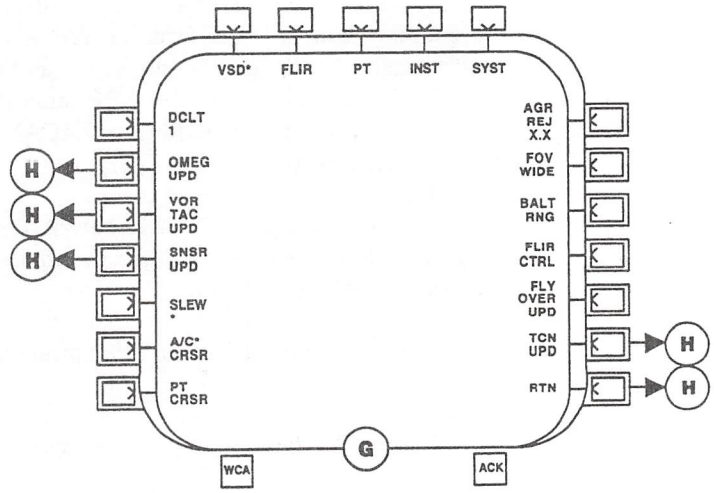

NO UPDATE
FLIR PAGE 1

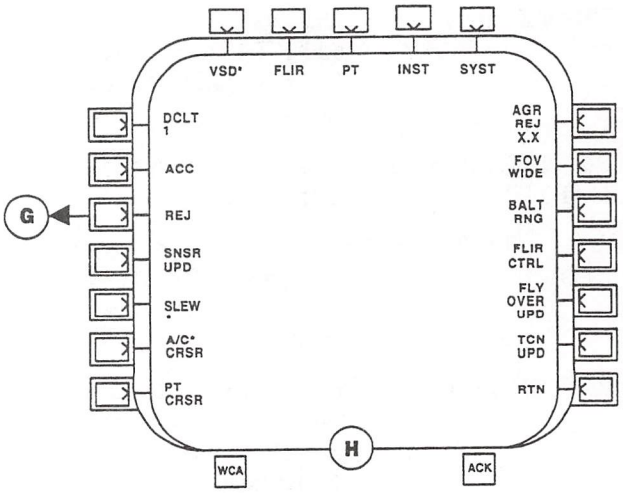

UPDATE
FLIR PAGE 2

AK0135_2
SA

Figure 3-72. Update Control Pages (Sheet 2 of 2)

KEY/LEGEND	FUNCTION
	RALT - Uses radar altitude as the ranging reference, the vertical range to the NRP is assumed to be the radar altitude. This method assumes level terrain, where the elevation of the NRP is equal to the elevation of the terrain directly under the aircraft. BALT - Uses barometric altitude as the ranging reference, the vertical range to the NRP is computed using the current aircraft barometric altitude and the NRP elevation. The accuracy of a barometric altitude update is dependant on the accuracy of the barometric altitude system, and decreases as the range to the NRP increases. AZ - Assumes that the slant range to the NRP is equal to the slant range computed using system positioning information with errors. Although the range is not changed, the direction to the NRP is changed according to FLIR azimuth and MFD target cursor azimuth.
R3 (1, 3, 5, 10, 15, 30, and 45▼) (MMR, MAP PLAN, and MAP CHART only)	Press to toggle to a larger range value for the map and radar MFD display area. Selections available: 1, 3, 5, 10, 30, and 45 miles. Some radar modes have short ranges: TA and TF/TA have a maximum range of 15 miles, and E2 has a maximum range of 10 miles.
R4 (FLIR, MMR, or MAP CTRL)	Press to access the selected system control page.
R5 (FLYOVER UPD)	Press to perform a flyover update. The update NRP must be directly under the aircraft when this key is pressed.
R6 (TCN UPD)	Press to perform a TACAN update. Update calculations are based on the NRP entered in the CDU for the TACAN station.
R7 (RTN)	Press to return to the current HSD, VSD, or HVR primary page.

KEY/LEGEND	FUNCTION
	CDU Page
L1 (UPDATE NRP)	Press to enter the NRP number from the entrypad to be used in performing the update. Entrypad data range: 1 to 100
L4 (Entrypad/Alert)	Standard CDU default pages line key. Refer to paragraph 3-45, CDU Default Pages, for more details.
R1 (BARO ALT)	Press to enter the aircraft's current barometric altitude from the entrypad to be used in performing the update. Entrypad data range: -5000 to 60000 feet. (Defaults to current system value.)
R2 (BARO PRESS)	Press to enter the aircraft's current barometric pressure from the entrypad to be used in performing the update. Entrypad data range: 26.00 to 34.00 inches or 800.0 to 1160.0 millibars. (Defaults to current system value.)
L2, L3, and R3 and R4	Not used.

3-158. TACAN/VORTAC Update.

The TACAN/VORTAC update station must be in the NRP table as an NRP. The pilot must enter the NRP number and the update location. Calculations are performed using the bearing and range data received from the TACAN/VORTAC station when the update is initiated. Check TACAN/VORTAC NRP coordinates in the NRP table if data is suspected to be in error. To perform a TACAN/VORTAC update, proceed as follows:

1. Power on the TACAN and VOR NAVAIDS using the procedures outlined under the equipment status pages as required.
2. Press MFD T1 key to display an HSD primary page.
3. Press T5 (SYST) key to display the system control page.
4. Press R1 (NRP) key to display the NRP table page.

5. Press L2 (NRP▼) key to select an NRP number that is not being used.

6. On the CDU, enter coordinates of the TACAN/ VORTAC station.

7. Press MFD R7 (RTN) key to display an HSD, VSD, or HVR primary page.

8. Press R5 (UPD) key to display an update control page.

9. L2 (OMEG UPD) and L3 (VORTAC UPD) will change to L2 (ACC) and L3 (REJ). There should be no reason to reject this data unless, the wrong NRP number was used which contains incorrect coordinates for the VORTAC or TACAN station.

10. Press L2 or L3 (ACC or REJ) key to accept or reject the update information.

11. Repeat steps 4. through 10. if desired results were not obtained or abort the update process.

12. Press R7 (RTN) key to display an HSD, VSD, or HVR primary page.

3-159. FLIR Update.

The FLIR system can be used to update present system coordinates. The FLIR system combines the aircraft's present altitude, as determine by the barometric altimeter and pressure altitude, with the NRP location, NRP altitude, MMR ranging data, and/or radar altimeter information when generating updating coordinates. When performing a FLIR NRP update, refer to Chapter 4 for track handle and FLIR operating procedures as required. The MMR air-to-ground ranging (AGR) capability can be used with FLIR updates to provide a higher degree of accuracy when performing updates. However, conditions may make the MMR AGR capability undesirable (e.g., EMCON operations, peculiarities in NRP area that make radar lock-on impossible or erratic). When placing the target cursor over the NRP in the MMR AGR mode, place the FLIR target cursor at the base of the NRP, because the MMR is designed to favor ground clutter for a lock-on. The AGR LOCK annunciator message must appear at the bottom of the MFD before valid bearing and range data appear. If the terrain is relatively flat around the aircraft position and the NRP, then radar altitude should be used. If the validity of the current barometric altitude data exists, the barometric altitude should be used. If the validity in the barometric altitude data is suspect, then azimuth should be used. After initiating an update, the bearing and range delta between the target cursor location and computed location of the NRP will be displayed at the bottom of the MFD. Placement of the target cursor on the FLIR image representing the update NRP coordinates is critical to the update accuracy. To perform a FLIR update, proceed as follows:

1. Power on the FLIR and MMR using the procedures outlined under the equipment status pages as required.

2. Press MFD T1 key to display a HSD, VSD, or HVR primary page.

3. Press T2 key to display FLIR mode. If STBY is displayed, press R4 (FLIR CTRL) key to access FLIR control page. Press L4 key to turn on the FLIR system, legend area should display FLIR ON.

4. Press R1 (VID) key to activate FLIR video for display.

5. Press L5 (SLEW) key to activate track handle for use with the MFD target cursor. Select slew rate with L6 key as required.

6. Place the track handle IDS switch at the center position.

7. Press R7 (RTN) key to display an HSD, VSD, or HVR primary page.

8. Press R5 (UPD) key to display the update control page.

9. Enter the update NRP number via the entrypad into the CDU .

10. Select the most accurate ranging method as determined by the availability of the MMR, surface around the aircraft, barometric pressure data, or suspected accuracy of the current positioning data. Use R4 (AGR, RALT, BALT, or AZ RNG) key on the MFD FLIR update control page to make this selection.

11. Use the track handle thumb switch as required to place the NRP image at the center of the MFD by slewing the target cursor and pulling the track handle trigger switch to the first detent (Figure 3-73).

NOTE

Do not place the target cursor over the update NRP location until the range to the update NRP is within 5 nautical miles. For greater accuracy, the range to the update NRP should be within 3 nautical miles.

12. Press track handle thumb switch as required to place the target cursor over the update NRP location (image).

13. To select AGR ranging, perform the following:

    a. On another MFD, setup the MMR for normal operation as described in the next paragraph, Multi-Mode Radar Update.

    b. Ensure AGR is selected as noted in step 10. above.

    c. Pull the track handle slew trigger to the second detent or press MFD L4 (SNSR UPD) key to initiate the update process. The MMR antenna will align to the FLIR antenna and target cursor location. (If AGR LOCK annunciator appears on the MFD, bearing and range delta information between the target cursor location and computed location of the NRP will be displayed at the bottom of the MFD. MMR range will be displayed adjacent to R1 (AGR REJ) key.)

    d. If the range adjacent R1 key is not correct after lock-on, press R1 key to reject the MMR range displayed adjacent to this key. The MMR will increment in range until it locks on another target.

    e. Return to step 12. if lock-on does not occur.

14. If AGR ranging is not selected, then pressing MFD L4 (SNSR UPD) key will initiate the update using RALT, BALT, or AZ RNG data as selected by MFD R4 key.

15. Bearing and range data will be displayed at the bottom of the MFD and L2 (OMEG UPD) and L3 (VORTAC UPD) will change to L2 (ACC) and L3 (REJ).

16. Press the desired L2 or L3 (ACC or REJ) key to accept or reject the bearing and range data calculations between the target cursor location and computed location of the NRP.

17. Repeat steps 9. through 16. if desired results were not obtained or abort update process.

3-160. Multi-Mode Radar Update.

The MMR can be used in conjunction with a known NRP location to perform an update to the current positioning system's coordinates. The MMR system combines the aircraft's present altitude, as determine by the barometric altimeter and pressure altitude, with the NRP location, NRP altitude, MMR ranging data, and/or radar altimeter information to determine update coordinates. When performing MMR NRP updates, refer to Chapter 4 for track handle and MMR operating procedures as required. The MMR can also be used with FLIR updates. After initiating an update, the bearing and range delta between the target cursor location and computed location of the NRP will be displayed at the bottom of the MFD. Placement of the target cursor on the radar image representing the update NRP coordinates is very critical to the update accuracy. To perform a MMR update, proceed as follows:

1. Power on the MMR using the procedures outlined under the equipment status pages as required.

2. Press MFD T1 key to display an HSD primary page.

3. Press T2 key to display RDR mode, if STBY is displayed, press R4 (RDR CTRL) key to access radar control pages. Press L7 (NEXT) key to access radar control page 2. Press L4 key on radar control page 2 to turn on the MMR, legend area should display RDR ON. Press L7 (NEXT) key to return to radar control page 1.

4. Press R1 (VID) key to active radar video for display.

5. Press T3 key to display a GM mode.

6. Press L5 (SLEW) key to activate track handle for use with MFD target cursor. Select slew rate with L6 key as required.

7. Place track handle IDS switch at the center position.

8. Press R7 (RTN) key to display HSD, VSD, or HVR primary page.

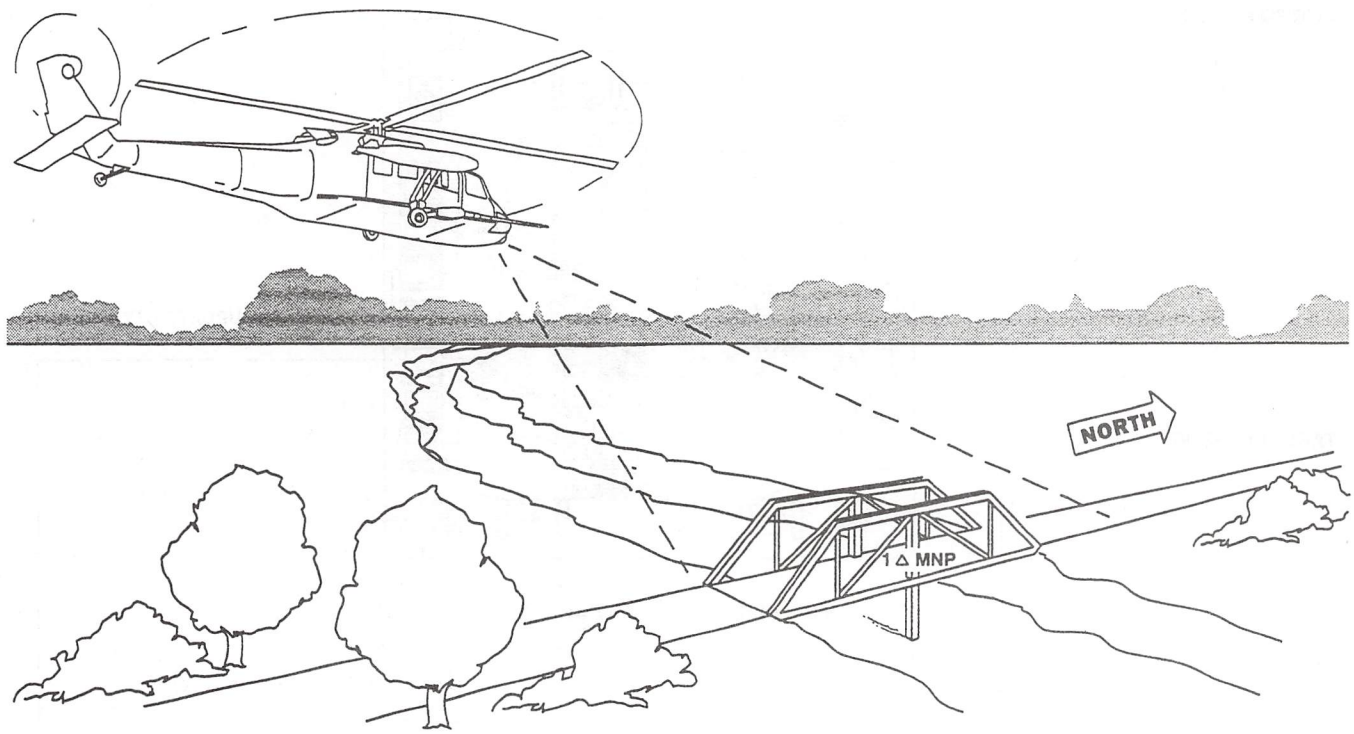

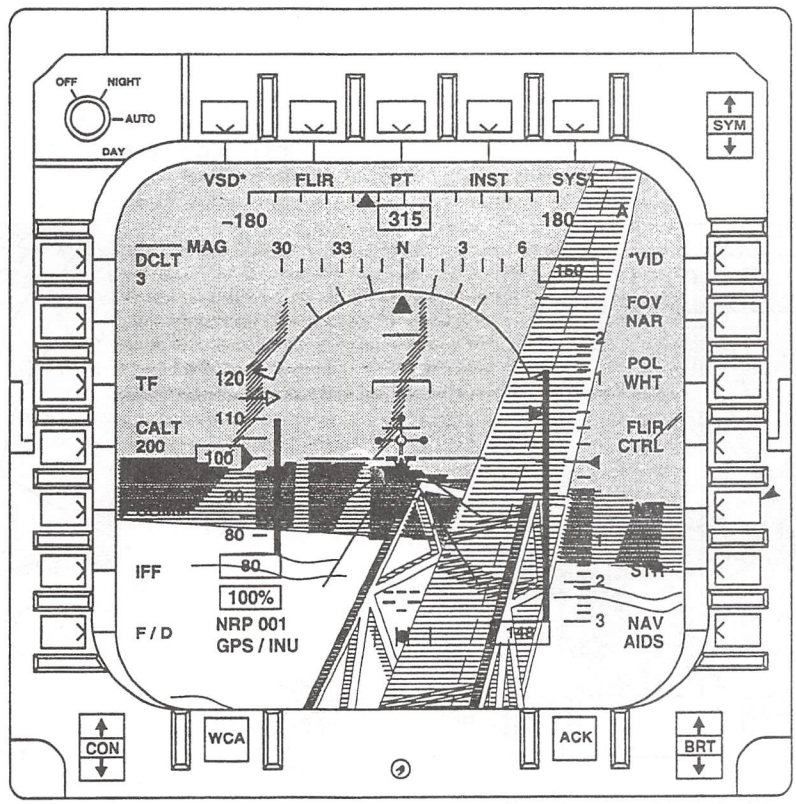

AK2458_1
SA

Figure 3-73. FLIR Update (Sheet 1 of 4)

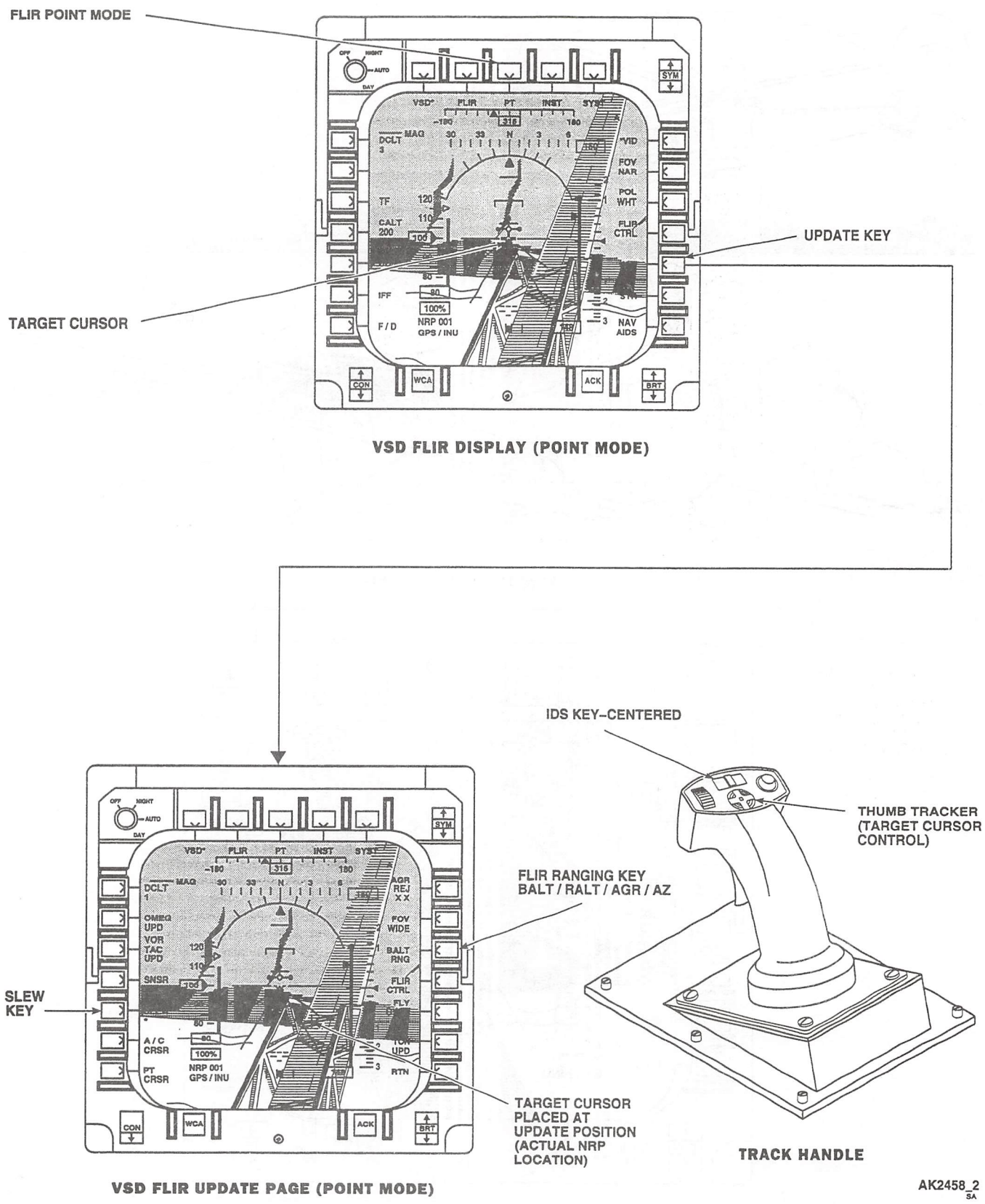

Figure 3-73. FLIR Update (Sheet 2 of 4)

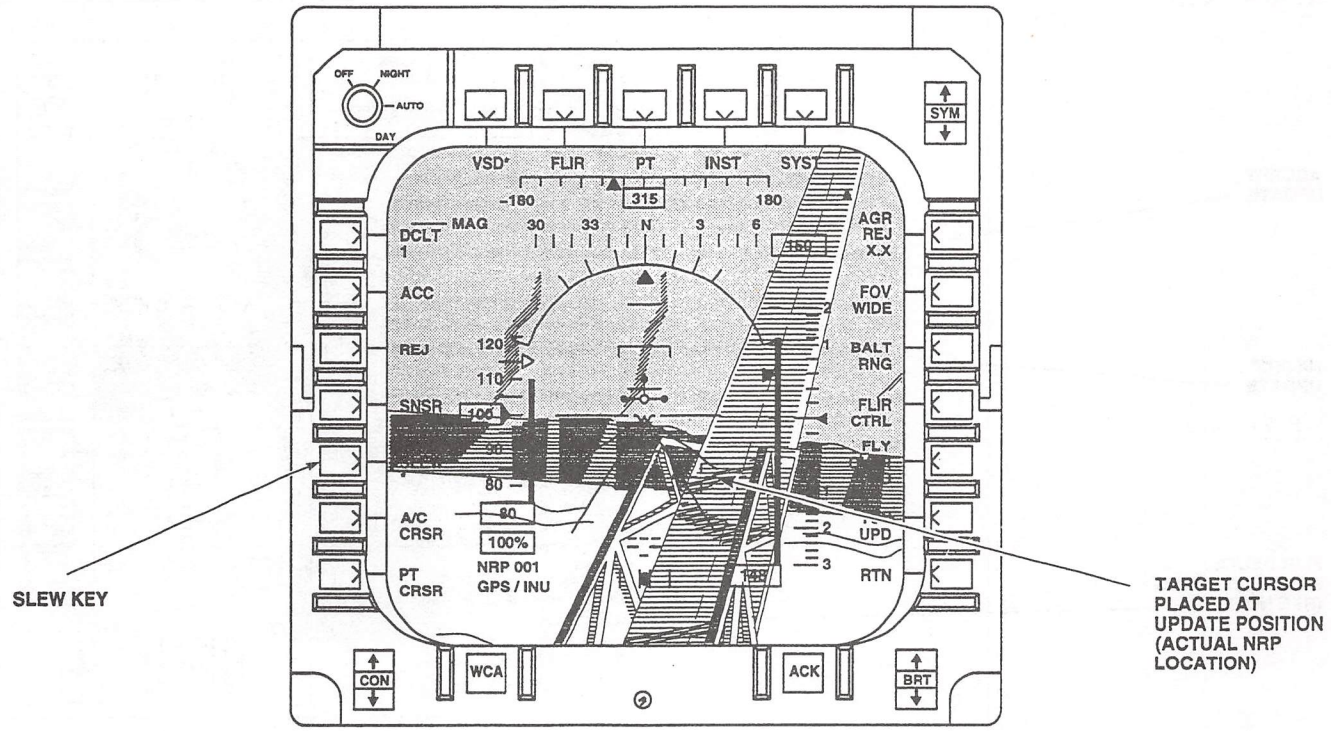

VSD FLIR UPDATE PAGE (POINT MODE)

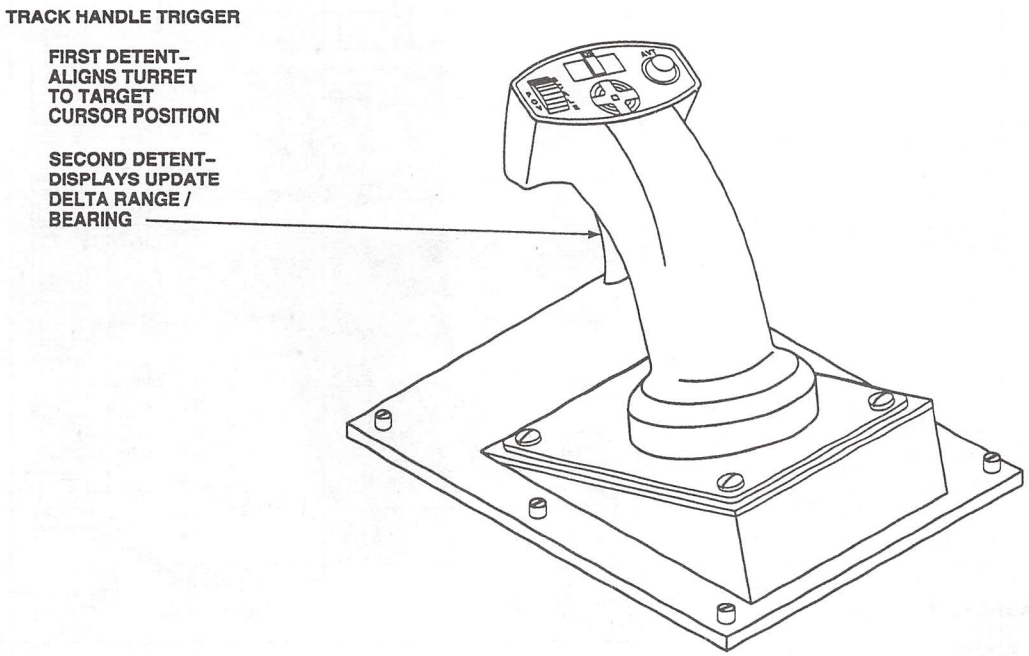

TRACK HANDLE

AK2458_3
SA

Figure 3-73. FLIR Update (Sheet 3 of 4)

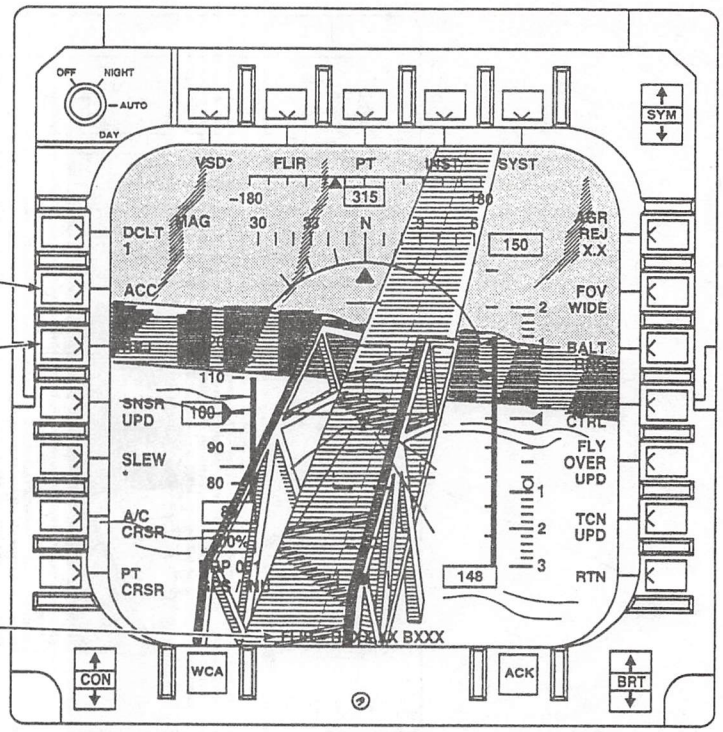

ACCEPT UPDATE

REJECT UPDATE

FLIR DELTA RANGE / BEARING (SEE NOTE)

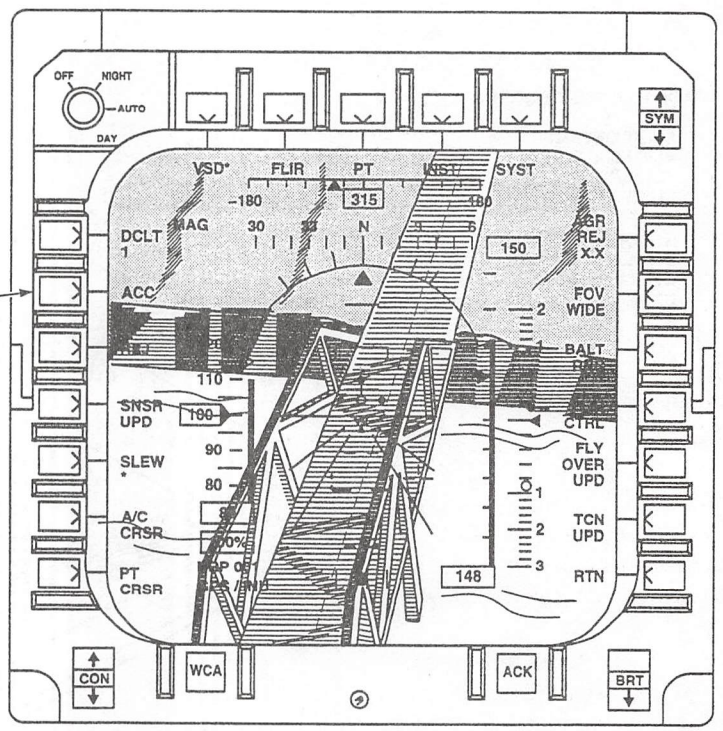

ACCEPT KEY

PRESSING THE ACCEPT KEY ACCEPTS THE DELTA DATA AND PERFORMS A NAVIGATION UPDATE.

FLIR TURRET AND SYSTEM POSITION ALIGNS WITH TARGET CURSOR POSITION (UPDATED NRP LOCATION).

NOTES:

1. FLIR DELTA RANGE / BEARING: REPRESENTS THE DELTA IN NAUTICAL MILES / DEGREES FROM THE UPDATE NRP TO THE COMPUTED NRP LOCATION.
2. APPEARS WHEN TARGET CURSOR TRIGGER IS PULLED TO SECOND DETENT.

AK2458_4
SA

Figure 3-73. FLIR Update (Sheet 4 of 4)

9. Press R5 (UPD) key to display the update control page.

10. Enter the update NRP number via the entrypad into the CDU .

11. Press the track handle thumb switch as required to place target cursor at the base of the radar image of the update NRP (Figure 3-74).

12. Press MFD L4 (SNSR UPD) key to initiate the update process.

13. Bearing and range data will be displayed at the bottom of the MFD and L2 (OMEG UPD) and L3 (VORTAC UPD) will change to L2 (ACC) and L3 (REJ).

14. Press the desired L2 or L3 key to accept or reject the bearing and range data between the target cursor location and computed location of the NRP.

15. Repeat steps 9. through 14. if desired results were not obtained or abort update process.

3-161. Map Display Generator Update.

The Map Display Generator can be used to perform an update of the current positioning system's coordinates. This procedure is basically a flyover of the actual update NRP location. Once directly over the NRP location, pressing the update key will shift the NRP and map depiction of the aircraft's current position underneath the aircraft symbol. A shift will only occur if the update NRP is not directly under the aircraft symbol prior to the update process. When performing a map NRP update, refer to Chapter 4 for track handle and map display generator procedures as required. The pilot will need to perform an update when the actual aircraft position is directly over a known location, but the MFD aircraft symbol and that portion of the map which depicts the aircraft's present location are not superimposed one over the other. If the aircraft symbol and map depiction of aircraft's present position are superimposed one over the other, then an update is not required. To perform a map display generator update, proceed as follows:

1. Press MFD T1 key to display an HSD primary page.

2. Press T2 key to display MAP mode.

3. Press R1 (VID) key to active map video for display.

4. Press T3 key to display PLAN or CHART mode. (Selection is based on type of map image being used.)

5. Press R4 (MAP CTRL) key to display the map control page.

6. Press L5 (SLEW) key to activate track handle for use with MFD target cursor. Select slew rate with L6 key as required.

7. Place the track handle IDS switch at the center position.

8. Press R7 (RTN) key to display HSD primary page.

9. Press R5 (UPD) key to display the update control page.

10. Position aircraft directly over the update NRP location.

11. Press L4 (SNSR UPD) key to initiate the update process.

12. Bearing and range data will be displayed at the bottom of the MFD, and L2 (OMEG UPD) and L3 (VORTAC UPD) will change to L2 (ACC) and L3 (REJ).

13. Press L2 or L3 (ACC or REJ) key to accept or reject the update information.

14. Repeat steps 11. through 14. if desired results were not obtained or abort update process.

15. Once the update is completed, the aircraft symbol and that portion of the map which depicts the aircraft's current position should be superimposed one over the other.

3-162. Flyover Update.

A flyover update is probably the easiest and most accurate of the updates. The update location must be entered into the NRP table and the pilot must position the aircraft over the NRP. Once the aircraft is over the NRP, pressing the FLYOVER UPD key performs the update. To perform a flyover update, proceed as follows:

1. Press MFD T1 key to display a HSD, VSD, or HVR primary page.

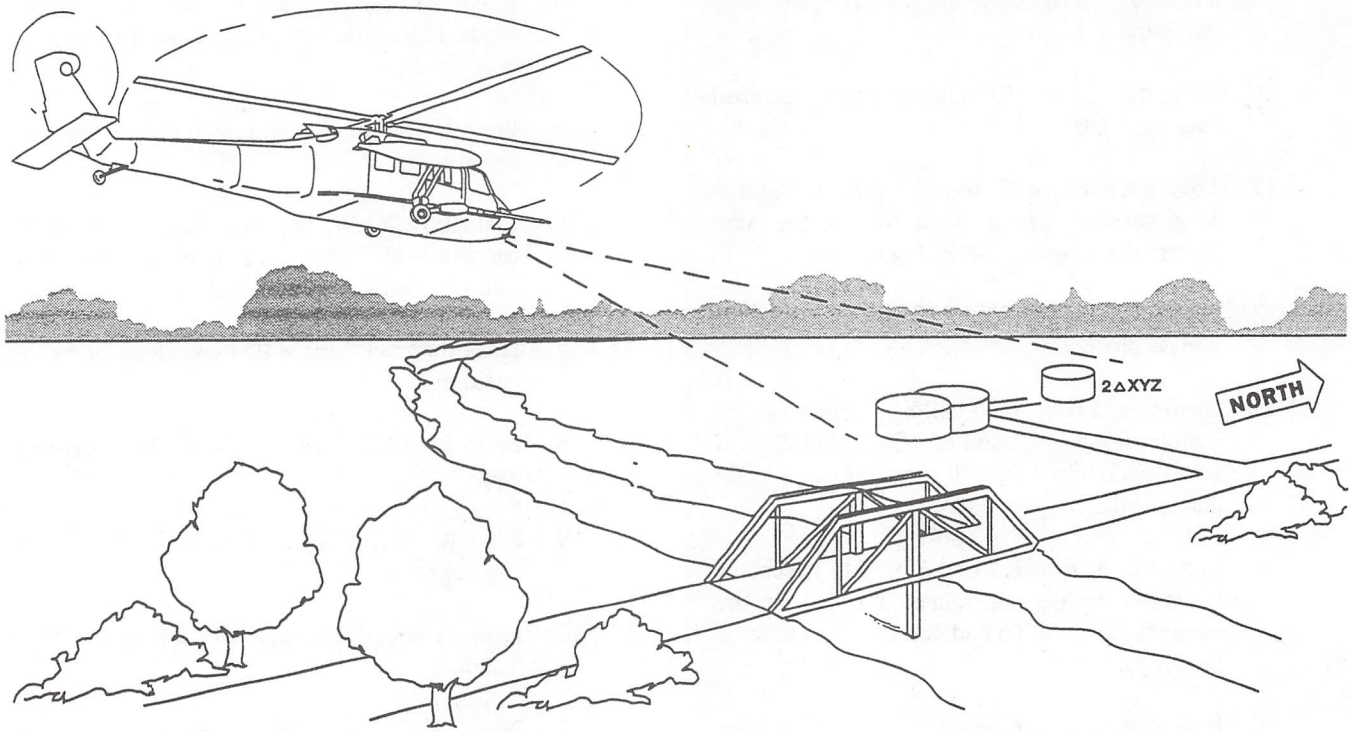

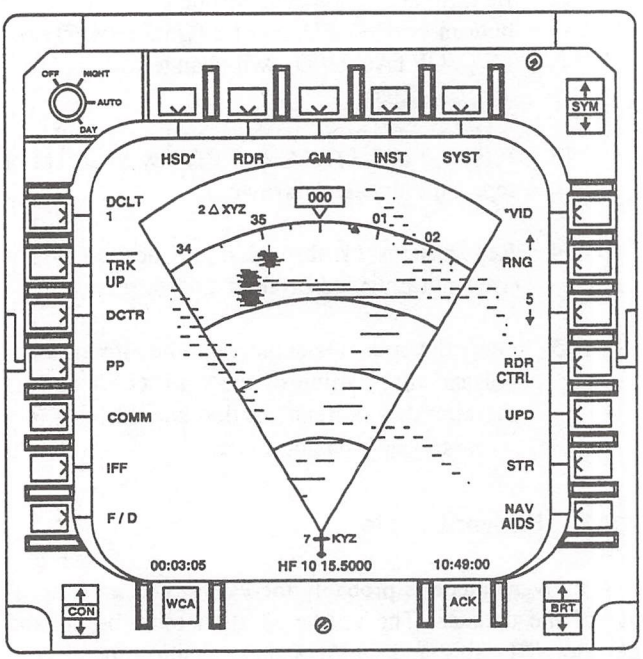

HSD SITUATION DISPLAY
BEFORE UPDATE

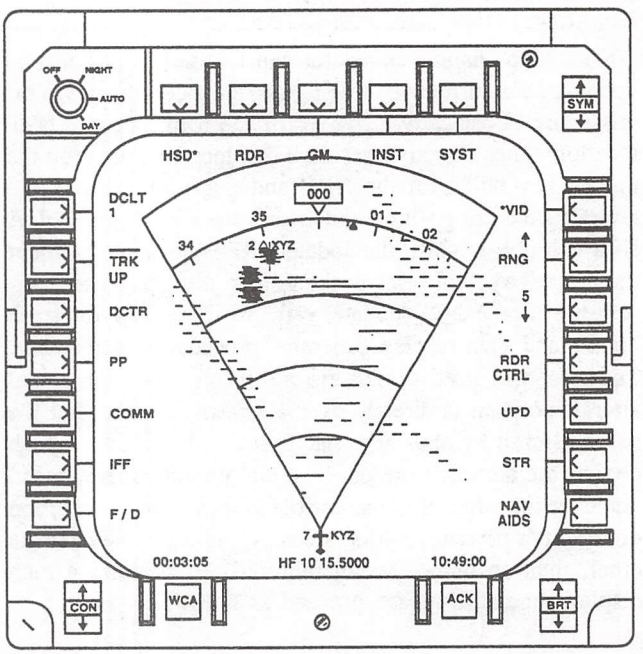

HSD SITUATION DISPLAY
AFTER UPDATE

AK1850
SA

Figure 3-74. Multi-Mode Radar Update

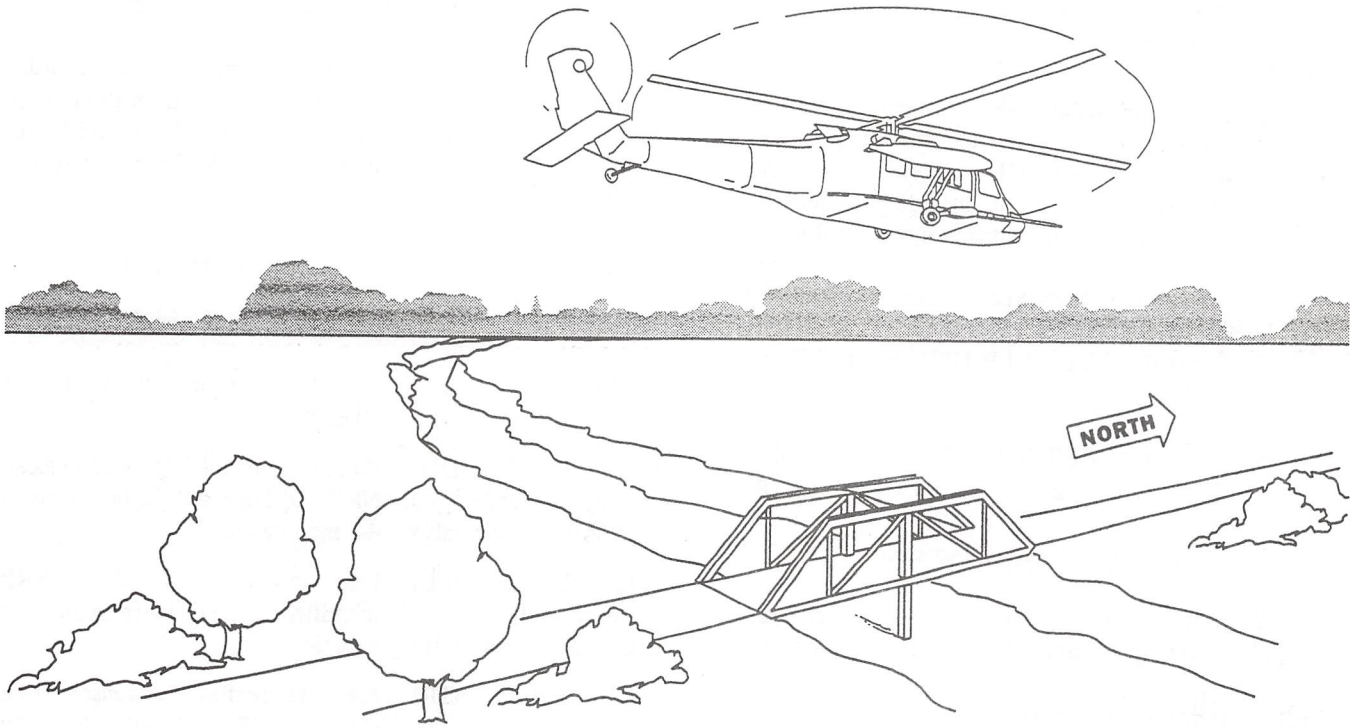

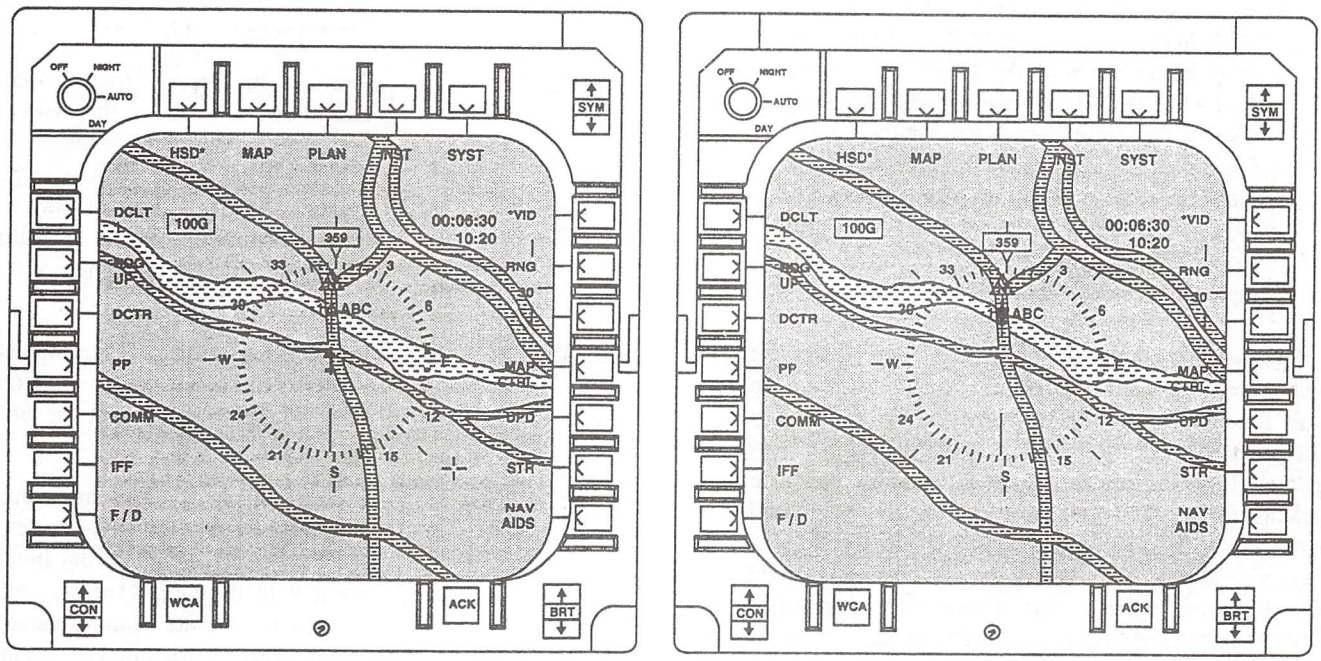

HSD SITUATION DISPLAY
BEFORE UPDATE

HSD SITUATION DISPLAY
AFTER UPDATE

AK2467
SA

Figure 3-75. Map Display Generator Update

2. Press R5 (UPD) key to display the update control page.

3. Enter the update NRP number, aircraft barometric altitude, and barometric pressure (if known) into the CDU adjacent to their line select keys. (Barometric altitude barometric pressure default to the current system values.

4. Position aircraft directly over the update NRP.

5. Press R5 (FLY OVER UPD) key to initiate the update process.

6. MFD L2 (OMEG UPD) and L3 (VORTAC UPD) will change to L2 (ACC) and L3 (REJ).

7. Press L2 or L3 key as required.

8. Repeat steps 4. through 7. if desired results were not obtained or abort update process.

3-163. Storing Coordinates.

NOTE

When an NRP update or an NRP store page is being displayed on an MFD and the Waypoint mode is active, the CDU page associated with the NRP update or NRP store will display the destination NRP for the current flight plan leg. As long as the NRP update or the store page is being displayed, the CDU page will continue to display that NRP until the NRP update or the NRP store is completed or deselected.

The sensor systems (FLIR, MMR, and MAP) and flyover store operations provide the ability to store coordinates for landmarks, targets, enemy activities, or any specific surface location. The pilot should perform a system update prior to storing coordinates if possible. Performing a system update prior to storing coordinates will minimize errors. An NRP store using the FLIR, MMR, and map display generator is very similar to performing an NRP update. However, when a store operation is performed, the pilot does not have to decide whether to accept or reject the data. The coordinates for the store NRP are automatically entered into the NRP table for the NRP number entered via the CDU. If the NRP is a threat location, additional data can be added by the pilot. Prior to initiating the store operation, the pilot must enter the NRP number into the CDU.

3-164. Store MFD and CDU Control Pages.

The store control pages allow the pilots to store coordinates of landmarks, target locations, or a grid location of an area of interest (Figure 3-76). The FLIR, MMR, and MAP modes are all described under the same MFD page description.

KEY/LEGEND	FUNCTION
	MFD Page (FLIR, MMR, or MAP)
L1 (DCLT 1, 2, or 3)	Press to select the desired declutter level.
L2 (THRT ADD) (map PLAN or CHART mode only)	Press to store a threat location as an NRP and NRP should be added to the map database.
L3 (THRT DEL) (map PLAN or CHART mode only)	Press to remove the threat NRP identified by the CDU from the map database.
L4 (SNSR STR) (not available for map PHOTO and 3D modes)	Press to perform a sensor store (FLIR, MMR, or MAP). Normally when this type of store is performed, this page is accessed from the sensor system control page and the store would be based on that system sensor data.
L5 (SLEW)	Press to enable the track handle thumb switch to move that MFD's target cursor and/or move the FLIR/MMR antenna to the MFD's target cursor, center the map display on the MFD's target cursor, or return the target cursor to the center of the MFD..
L6 (A/C CRSR)	Press to display aircraft bearing and range to the target cursor location. Data will be displayed at the bottom of the MFD.
L7 (PT CRSR)	Press to display bearing and range from a point on the MFD image to the target cursor. Select the initial point with the target cursor, press L7 key to activate point-to-cursor, when target cursor moves, bearing and range information is displayed from the initial point to the target cursor. Data will be displayed at the bottom of the MFD.

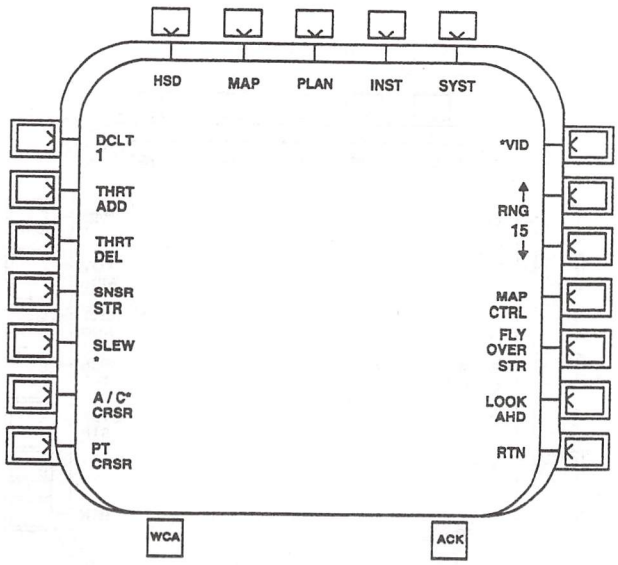

MAP STORE PLAN AND CHART ONLY

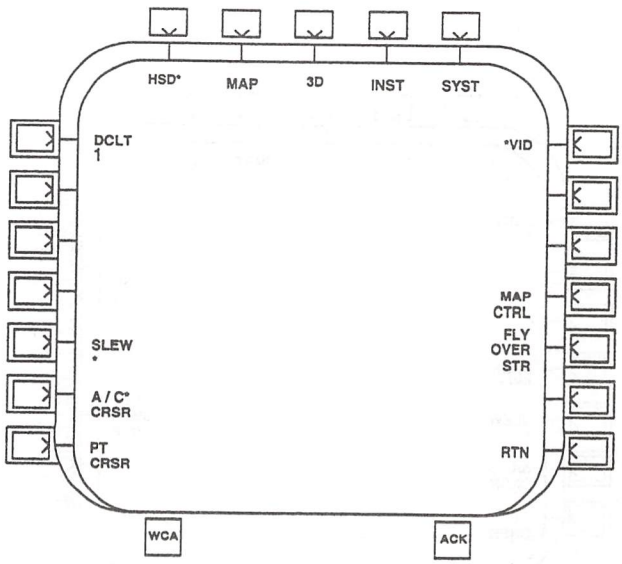

MAP STORE PHOTO AND 3D ONLY

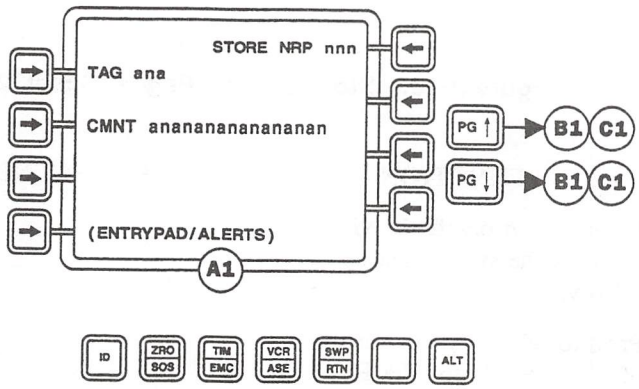

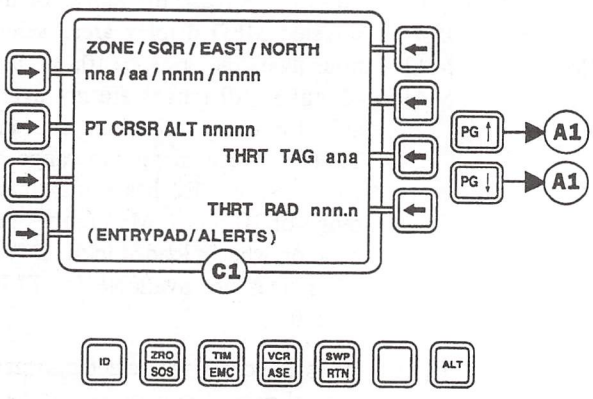

DISPLAYED WHEN SYSTEM REFERENCE IS UTM.

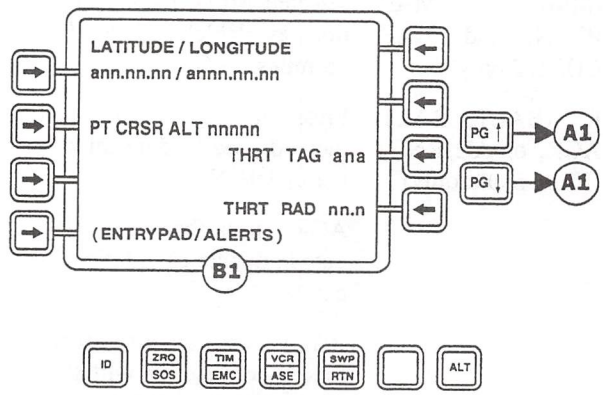

DISPLAYED WHEN SYSTEM REFERENCE IS LAT/LONG.

AK0133_1
SA

Figure 3-76. Store Control Pages (Sheet 1 of 2)

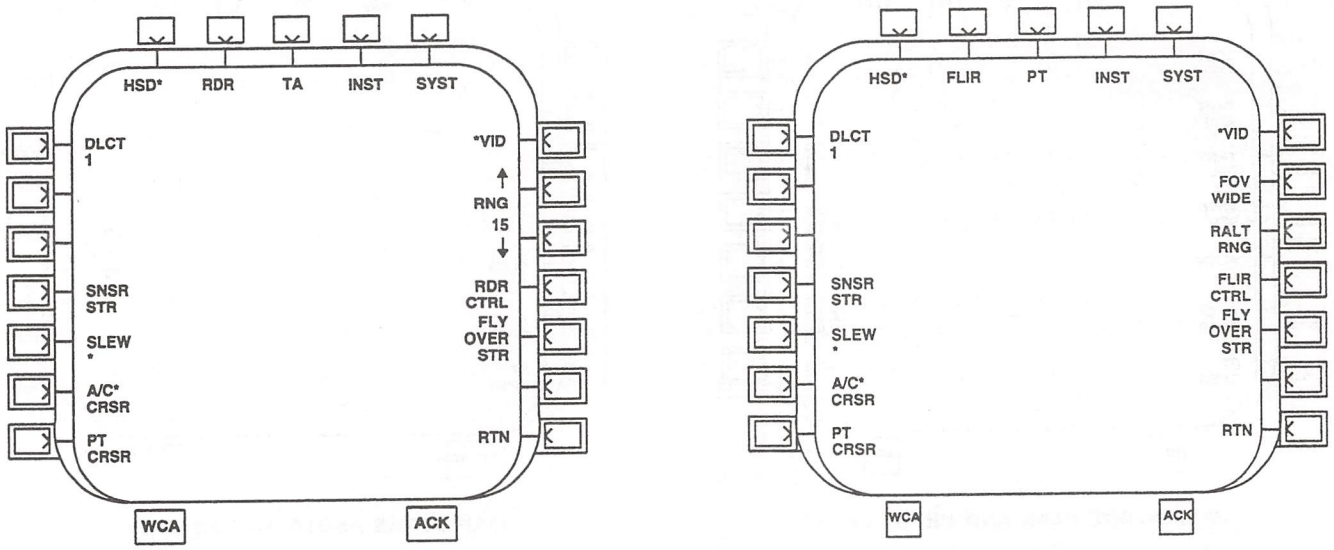

Figure 3-76. Store Control Pages (Sheet 2 of 2)

KEY/LEGEND	FUNCTION
R1 (VID)	Press to turn on/off the video provided by the system selected under T2 key.
R2 (FOV) (FLIR mode only)	Press to select wide or narrow field of view (FOV) for the FLIR system.
R2 (RNG▲) (MMR, MAP PLAN, and MAP CHART only)	Press to increase the range for the selected MFD display area. Selections available: 1, 3, 5, 10, 30, and 45 miles.
R3 (BALT, RALT AGR, or AZ RNG) (FLIR mode only)	Press to select the computing method used to determine range to the update NRP. AGR - uses the MMR slant range data in update calculation (most accurate). RALT - uses the aircraft radar altitude in conjunction with the altitude entered for the NRP to derive slant range data in update calculation. BALT - uses the aircraft barometric altitude in conjunction with the altitude entered for the NRP to derive slant range data in update calculation. AZ - uses horizontal range data in update calculations (least accurate).
R3 (1, 3, 5, 10, 15, 30, and 45▼) (MMR, MAP PLAN, and MAP CHART only)	Press to decrease the range for the selected MFD display area. Selections available: 1, 3, 5, 10, 30, and 45 miles. All ranges are not available for every selection. TA and TF/TA have a maximum range of 15 miles, and E2 has a maximum range of 10 miles. Map ranges depend on what is loaded in the DTM. All ranges are available for FLIR operations.
R4 (FLIR, MMR, or MAP)	Press to access the selected system control page.

KEY/LEGEND	FUNCTION
R5 (FLYOVER STR)	Press to perform a flyover store. The store NRP number must be in the CDU and the aircraft must be over the NRP location when this key is pressed.
R6 (LOOK AHD) (HSD map PLAN and CHART mode only)	Press to look at a section of the map area that is not within the current vicinity of the aircraft's location.
R7 (RTN)	Press to return to the current HSD, VSD, or HVR primary page.
	CDU Page 1 (LAT/LONG or UTM)
L1 (TAG)	Press to enter the three character identifier from the entrypad to be used with the NRP. Entrypad data range: maximum of 3 alphanumeric characters.
L2 (CMNT)	Press to enter a descriptive comment from the entrypad for the NRP. Data entry range: maximum of 16 alphanumeric characters.
L4 (Entrypad/Alerts)	Standard CDU default pages line key. Refer to paragraph 3-45, CDU Default Pages, for more details.
R1 (STORE NRP)	Press to enter the NRP number from the entrypad to be assigned to the NRP data being entered into the CDU. Data entry range: 1 to 100. (Enter a number from 96 through 100 if the NRP is expected to be moving. Moving parameters will have to entered via the NRP table pages.)
L3 and R2 thru R4	Not used.

KEY/LEGEND	FUNCTION
	CDU Page 2 (LAT/LONG or UTM)
L1 key (LAT/LONG page)	Press to enter the LAT/LONG coordinates from the entrypad for use with the assigned NRP. Entrypad data range: latitude - N or S, 00.00.00 to 90.00.00 (degrees.minutes.hundredths of a minute); longitude - E or W, 000.00.00 to 180.00.00 (degrees.minutes.hundredths of a minute).
L1 key (UTM page)	Press to enter the UTM coordinates from the entrypad for use with the assigned NRP. Entrypad data range: zone - 01A to 60Z; square - AA to ZZ; easting - 0000 to 9999 (tens of meters); and northing - 0000 to 9999 (tens of meters).
L2 (PT CRSR ALT) (LAT/LONG page)	Press to enter the elevation from the entrypad for the NRP location. Entrypad data range: -2000 to 30000 (feet).
L2 (PT CRSR ALT) (UTM page)	Press to enter the elevation from the entrypad for the NRP location. Entrypad data range: -1524 to 9100 (meters)
L4 (Entrypad/Alerts)	Standard CDU default pages line key. Refer to paragraph 3-45, CDU Default Pages, for more details.
R1 (LATITUDE/ LONGITUDE) (LAT/LONG page)	Label for L1 key entry.
R1 (ZONE/SQR/ EAST/NORTH) (UTM page)	Label for L1 key entry.

KEY/LEGEND	FUNCTION
R3 (THRT TAG)	Press to enter the three character identifier from the entrypad to be used with the threat NRP. Entrypad data range: maximum of 3 alphanumeric characters.
	NOTE If a THRT RAD circle range exceeds the MFD selected range limit, the threat circle will not be displayed properly.
R4 (THRT RAD) (LAT/LONG page)	Press to enter the threat/avoidance radius value from the entrypad. Entrypad data range: 0 to 99.9 (nautical miles). Depending on the range selected on the MFD, the THRT RAD is currently limited as follows: HSD centered (MFD Range nm/THRT RAD limit) - 1/1.5, 3/4.5, 5/7.5, 10/15, 15/22.5, 30/45, and 45/67.5; HSD decentered (MFD Range nm/THRT RAD limit) - 1/0.8, 3/3.5, 5/4.1, 10/8.2, 15/12.3, 30/24.6, and 45/37.
R4 (THRT RAD) (UTM page)	Press to enter the threat/avoidance radius value from the entrypad. Entrypad data range: 0 to 185.0 (kilometers). Note - Convert THRT RAD limit under LAT/LONG to kilometers by multiplying THRT RAD by 1.609.

3-165. FLIR Store.

The FLIR system can be used to store coordinates as an NRP of any surface locations. This procedure is very similar to a FLIR update. When performing a FLIR NRP store, refer to Chapter 4 for track handle and FLIR operating procedures as required. The pilot must enter an NRP number for the grid location to be stored prior to pressing the MFD store key. Coordinates are automatically calculated and entered into the NRP table. Other descriptive data about the store NRP must be manually entered. To perform a FLIR store, proceed and follows:

1. Power on the FLIR and MMR using the procedures outlined under the equipment status pages as required.
2. Press MFD T1 key to display a HSD, VSD, or HVR primary page.
3. Press MFD T2 key to display FLIR mode, if STBY is displayed, press R4 (FLIR CTRL) key to access FLIR control page. Press L4 key to turn on the FLIR system, legend area should display FLIR ON.
4. Press MFD L5 (SLEW) key to activate track handle for use with the MFD target cursor. Select slew rate with L6 key as required.
5. Press R7 (RTN) key to display HSD, VSD, or HVR primary page.
6. Press MFD R1 (VID) key to active FLIR video for display.
7. Place track handle IDS switch at the left position.
8. Press MFD T3 key to display PT mode.
9. Press R6 (STR) key to display the store control page.
10. Enter the store NRP number, NRP tag identifier, and NRP comments. If the NRP is a threat location, enter threat elevation, threat tag, and threat radius into the CDU.
11. Select the most accurate ranging method as determined by the availability of radar or barometric pressure altitude. (Use R4 (RALT or BALT) key on the MFD FLIR store control page to make this selection.)
12. Press track handle thumb switch as required to place the NRP image at the center of the MFD and pull track handle slew trigger to the first detent (Figure 3-73).
13. Pull the track handle slew trigger to the second detent or press MFD L4 (SNSR STR) key to initiate the NRP store. (An asterisk will appear adjacent to the legend (SNSR STR*) of the L4 key and will be removed when the NRP store is completed.)

3-166. Multi-Mode Radar Store.

The MMR can be used to store a grid location as an NRP. When performing a MMR NRP store, refer to Chapter 4 for track handle and MMR operating procedures as required. The MMR can also be used with FLIR stores. The pilot must enter an NRP number for the grid location to be

stored prior to pressing the MFD store key. Grid coordinates are automatically calculated and entered into the CDU and system. Other descriptive data about the store NRP must be manually entered. To perform an MMR update, proceed as follows:

1. Power on the MMR using the procedures outlined under the equipment status pages as required.
2. Press MFD T1 key to display an HSD primary page.
3. Press T2 key to display RDR mode, if STBY is displayed, press R4 (RDR CTRL) key to access radar control page. Press L7 (NEXT) key to access radar control page 2. Press L4 key on radar control page 2 to turn on the MMR, legend area should display RDR ON. Press L7 (NEXT) key to return to radar control page 1.
4. Press T3 key to display a GM mode.
5. Press R1 (VID) key to active radar video for display.
6. Press L5 (SLEW) key to activate track handle for use with MFD target cursor. Select slew rate with L6 key as required.
7. Place track handle IDS switch at the center position.
8. Press L2 (FREQ▲), L3 (1 thru 8▼), and R4 (LIN or CIR) for best radar presentation.
9. Press R7 (RTN) key to display HSD, VSD, or HVR primary page.
10. Press R6 (STR) key to display the update control page.
11. Enter the store NRP number, NRP tag identifier, and NRP comments. If the NRP is a threat location, enter threat elevation, threat tag, and threat radius into the CDU.
12. Position aircraft as required to point the nose of aircraft at the actual store NRP location while the radar image is displaying the NRP on the MFD.
13. Press track handle thumb switch as required to place target cursor at the base of the radar image for the update NRP location (Figure 3-74).
14. Press MFD L4 (SNSR UPD) key to initiate the store process.
15. Bearing and range data from the aircraft to the target cursor will be displayed at the bottom of the MFD and coordinates will be automatically entered into the respective CDU legend area.

3-167. Map Display Generator Store.

The Map Display Generator can be used to perform an NRP store. When performing a map NRP store, refer to Chapter 4 for track handle and map display generator procedures as required. The pilot must enter an NRP number for the location to be stored as an NRP prior to pressing the MFD store key. Coordinates are automatically calculated and entered into the NRP table. Other descriptive data about the store NRP must be manually entered. To perform a map display generator update, proceed as follows:

1. Power on the map display generator using the procedures outlined under the equipment status pages as required.
2. Press MFD T1 key to display an HSD primary page.
3. Press T2 key to display MAP mode.
4. Press R1 (VID) key to activate map video for display.
5. Press T3 key to display the PLAN or CHART mode. (Selection is based on type of map image being used.)
6. Press R4 (MAP CTRL) key to display map control page 1.
7. Press L5 (SLEW) key to activate track handle for use with MFD target cursor. Select slew rate with L6 key as required.
8. Place track handle IDS switch at the center position.

9. Press R7 (RTN) key to display HSD primary page.

10. Press R6 (STR) key to display the store control page.

11. Enter the store NRP number, NRP tag identifier, and NRP comments. If the NRP is a threat location, enter threat elevation, threat tag, and threat radius into the CDU.

12. Place the target cursor over the location to be stored as an NRP (Figure 3-75).

13. Press MFD L4 (SNSR STR) key to initiate store process. (An asterisk will appear adjacent to the legend (SNSR STR*) of the L4 key and will be remove when the NRP store is completed.)

3-168. Flyover Store.

A flyover store is probably the easiest and most accurate of the store. The store NRP number must be entered into the CDU and the pilot must position the aircraft over the surface location to be stored as an NRP. Once the aircraft is over the location to be stored, pressing the FLYOVER STR key performs the store operation. To perform a flyover store, proceed as follows:

1. Press MFD T1 key to display a HSD or VSD primary page.

2. Press R6 (STR) key to display the store control page.

3. Enter the store NRP number, NRP tag identifier, and NRP comments.

4. Position aircraft directly over the store NRP location.

5. Press R5 (FLY OVER STR) key to initiate the store process. (An asterisk will appear adjacent to the legend (FLY OVER STR*) of the R5 key and will be remove when the NRP store is completed.)

3-169. Bearing and Range Function Keys.

There are two keys L6 (A/C CRSR) and L7 (PT CRSR) on the update and store MFD pages that provide range and bearing information to the pilots. These keys will display bearing and range data from the aircraft location to the target cursor position, or a selected point to the target cursor position. This information is displayed at the bottom of the MFD when these function keys are used. Pressing L6 (A/C CRSR) key will display bearing and range to the target cursor from the aircraft location. Pressing L7 (PT CRSR) key will display bearing and range from a point on the MFD image to the target cursor. To perform the point-to-cursor feature, select initial point with target cursor and press L7 key to activate point-to-cursor. When the target cursor moves, bearing and range information is displayed from the initial point to the target cursor.

3-170. Engine Instrument, Powertrain, and Fuel and Power Management Pages.

Engine performance, engine and powertrain temperatures, oil pressures, and fuel information are provided when the respective MFD page is being displayed. Information on the engine instrument, powertrain, and fuel and power management pages is used by the pilot to review aircraft performance data. A CDU page is provided to allow the pilot to enter different aircraft and atmospheric conditions when HVR OVRD is activated.

3-171. Engine Instrument Page.

The engine instrument page provides information on NP, NR, TQ, ENG TEMP, NG, oil pressure, total fuel, main and external tanks, torque available, and torque required (Figure 3-77). Access to the engine instrument page is provided by T4 (INST) key. L1 (POWER TRAIN) key on the instrument page provides access to the powertrain page. During a hover performance check with HVR OVRD inactive, IASS current aircraft and atmospheric conditions are used to determine 10-minute TRQ AVL (torque available) and TRQ RQD (torque required). With HVR OVRD active, a pilot can enter CDU changes to aircraft and atmospheric conditions to display TRQ AVL and TRQ RQD for current or projected conditions. Refer to Chapter 5, for more information on this page. To access the engine instrument page, proceed as follows:

KEY/LEGEND	FUNCTION
	MFD Page
L1 (POWER TRAIN)	Press to access the powertrain page.
R2 (HVR OVRD)	Press to select or deselect HVR OVRD.

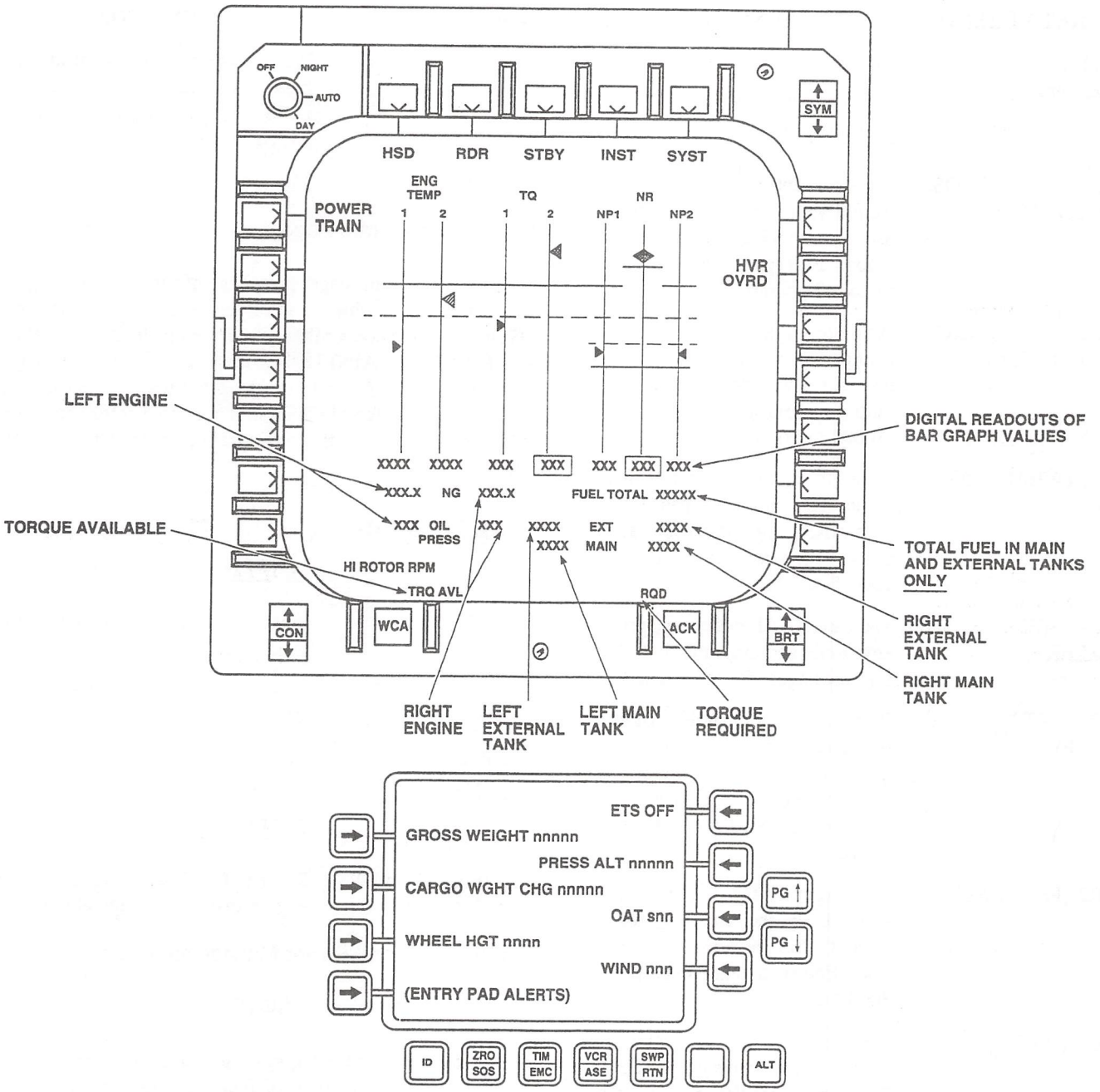

NOTES

ALL HOVER CALCULATIONS ARE BASED ON THE AIRCRAFT HOVERING INTO THE WIND.

WHEN HOVER OVERRIDE IS INACTIVE (ASTERISK NOT PRESENT):

TEN-MINUTE TORQUE AVAILIBLE IS DISPLAYED USING IASS CURRENT FAT AND PRESSURE ALTITUDE.

TORQUE REQUIRED IS DISPLAYED USING CURRENT GROSS WEIGHT, FAT, PRESSURE ALTITUDE, WHEEL HEIGHT, AND WINDSPEED.

WHEN HOVER OVERRIDE IS ACTIVE (ASTERISK PRESENT):

TORQUE AVAILIBLE AND TORQUE REQUIRED ARE CALCULATED AND DISPLAYED BASED ON OPERATOR ENTERED VALUES. THE OPERATOR CAN ALSO ENTER CHANGES TO GROSS WEIGHT, FAT, PRESSURE ALTITUDE, WHEEL HEIGHT, AND WINDSPEED TO DERIVE TORQUE AVAILABLE AND TORQUE REQUIRED FOR PROJECTED CONDITIONS.

INTERNAL AUXILIARY TANKS' FUEL IS NOT INCLUDED IN THE TOTAL FUEL QUANTITY.

AK3048
SA

Figure 3-77. Engine Instrument Page

KEY/LEGEND	FUNCTION
L2 thru L7, R1, and R3 thru R7	Not used.
	CDU Page 1
L1 (GROSS WEIGHT)	Press to enter the aircraft gross weight value from the entrypad for use with IASS performance calculations. Entrypad data range: 12000 to 24500 pounds.
L2 (CARGO WGHT CHG)	Press to enter the cargo weight change value from the entrypad for use with IASS performance calculations. Entrypad data range: -30000 to 30000 pounds.
L3 (WHEEL HGT)	Press to enter the wheel height value from the entrypad for use with IASS performance calculations. Entrypad data range: 10 to 1000 feet.
L4 (ENTRYPAD/ ALERT)	Standard CDU default pages line key. Refer to paragraph 3-45, CDU Default Pages, for more details.
R1 (ETS ON or OFF)	Press to select ON/OFF when external tanks are installed/removed. This setting must reflect the aircraft's current configuration or performance calculations will be incorrect.
R2 (PRESS ALT)	Press to enter the pressure altitude value from the entrypad for use with IASS performance calculations. Entrypad data range: -2000 to 30000 feet.
R3 (OAT)	Press to enter the FAT value from the entrypad for use with IASS performance calculations. Entrypad data range: -99 to 99 celsius.

NOTE

Wind speed is set to zero as the aircraft transitions through 50 knots. The pilot can enter estimated wind speed without pressing the HVR OVRD key when the aircraft is below 50 knots.

KEY/LEGEND	FUNCTION
R4 (WIND)	Press to enter the wind speed value from the entrypad for use with IASS performance calculations. Entrypad data range: 00 to 100 knots.
R4 key	Not used.

3-172. Powertrain Page.

The powertrain page provides information on engine chips, powertrain chips, and oil temperatures and pressures (Figure 3-78). Access to the powertrain page is provided by L1 (POWER TRAIN) key on the engine instrument page. To return to engine instrument page, press L1 (ENG) key on this page. Refer to Chapter 5, for more information on this page. To access the powertrain page, proceed as follows:

KEY/LEGEND	FUNCTION
	MFD Page
L1 (ENG)	Press to access the engine instrument page.
R2 (HVR OVRD)	Press to select or deselect HVR OVRD.
L2 thru L7, R1, and R3 thru R7	Not used.
	CDU Page 1
L1 thru L4 and R1 thru R4 keys	Refer to CDU page information for engine instrument page above.

3-173. Fuel and Power Management Page.

NOTE

For the current leg only, leg fuel bingo represents the amount of fuel required to complete the flight plan including reserve fuel from the aircraft's present position. For all other legs, fuel bingo represents the fuel required to complete the flight plan with required reserve fuel from the leg's destination NRP.

This page provides information on fuel usage, torque required, and torque available for each flight plan leg. The mission processor calculates torque required and available,

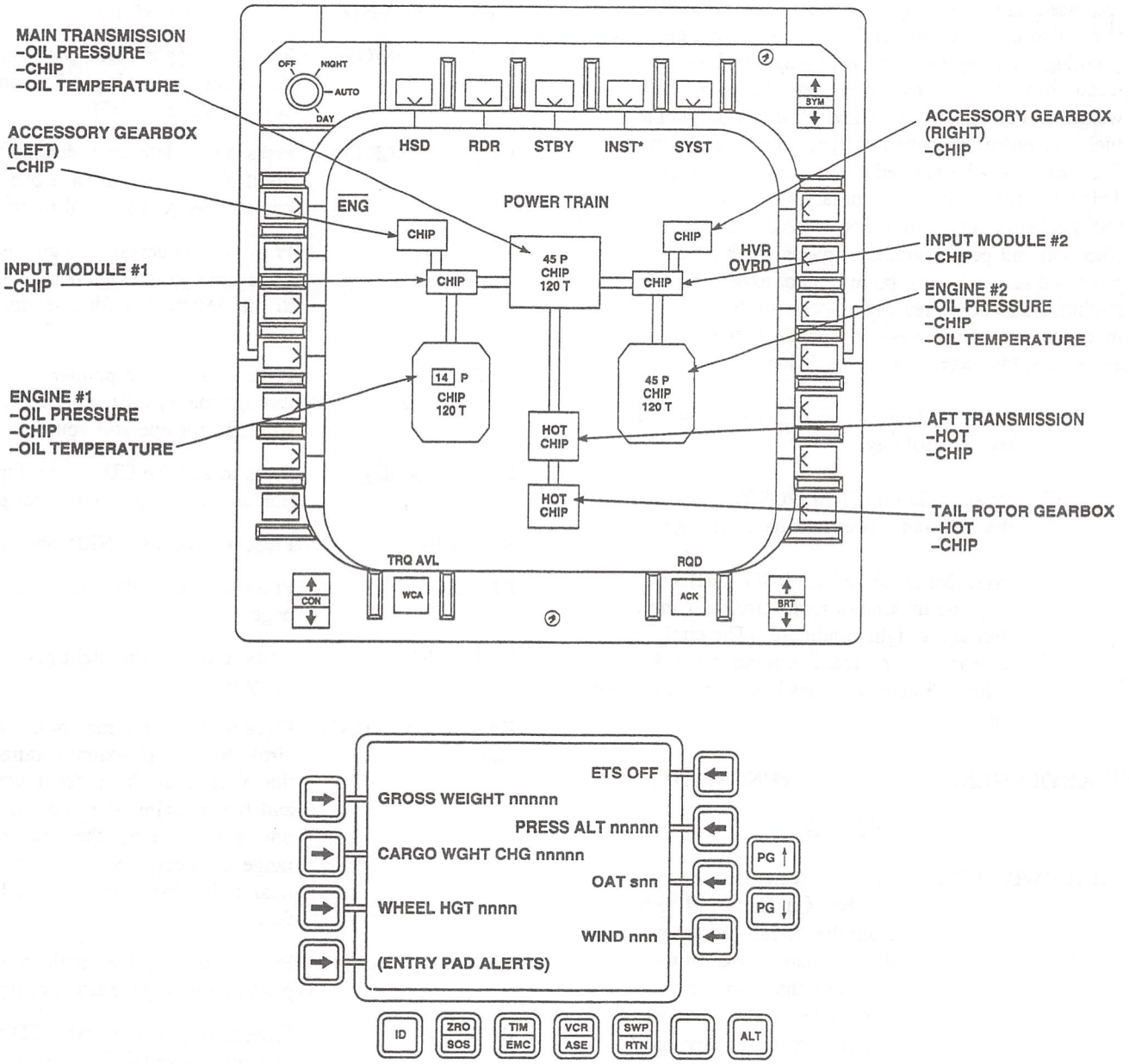

NOTES

ALL HOVER CALCULATIONS ARE BASED ON THE AIRCRAFT HOVERING INTO THE WIND.

WHEN HOVER OVERRIDE IS INACTIVE (ASTERISK NOT PRESENT):

TEN–MINUTE TORQUE AVAILIBLE IS DISPLAYED USING IASS CURRENT FAT AND PRESSURE ALTITUDE.

TORQUE REQUIRED IS DISPLAYED USING CURRENT GROSS WEIGHT, FAT, PRESSURE ALTITUDE, WHEEL HEIGHT, AND WINDSPEED.

WHEN HOVER OVERRIDE IS ACTIVE (ASTERISK PRESENT):

TORQUE AVAILIBLE AND TORQUE REQUIRED ARE CALCULATED AND DISPLAYED BASED ON OPERATOR ENTERED VALUES. THE OPERATOR CAN ALSO ENTER CHANGES TO GROSS WEIGHT, FAT, PRESSURE ALTITUDE, WHEEL HEIGHT, AND WINDSPEED TO DERIVE TORQUE AVAILABLE AND TORQUE REQUIRED FOR PROJECTED CONDITIONS.

INTERNAL AUXILIARY TANKS' FUEL IS NOT INCLUDED IN THE TOTAL FUEL QUANTITY.

AK3049
SA

Figure 3-78. Powertrain Page

fuel used and remaining, and bingo fuel based on the entered load configuration and predicted weight changes for each leg. The engine instrument page displays the current torque available and torque required based on the present weight and balance data entered for the flight plan leg. The fuel and power management page summarizes the entire flight based on the entered data for each leg (Figure 3-79). This will give the pilot a summary of fuel available for any unexpected delays or required route deviations. The flight plan fuel and power summary pages can be used to assess projected safe reference points and/or to determine whether landing sites can be reached. Access to the fuel and power management page is provided from the system control page. To access this page, proceed as follows:

1. Press MFD T5 (SYST) key to display the system control page.
2. Press MFD L4 (FUEL/POWER) key to display the fuel and power management page.
3. Press MFD L1 (MAX RNG CIR) key to display the maximum range circle for the present fuel and weight conditions. (The circle will not appear until the maximum range has decreased below 45 nautical miles based on the available fuel.)

KEY/LEGEND	FUNCTION
	MFD Page
L1 (BKWD SEQ)	Press to decrement the current leg number. Guidance will be provided from the aircraft present position to the destination NRP of the selected leg when the waypoint mode is active. Selected leg number is displayed next to L1 key and type of leg is displayed next to L2 key. (Leg type: INIT, HVR, LAND, APPR, CRS, STOP, and T/F.)
L2 (INIT LEG FWD)	Press to increment the current leg number. Guidance will be provided from the aircraft present position to the destination NRP of the selected leg when the waypoint mode is active. Selected leg number is displayed next to L1 key and type of leg is displayed next to L2 key. (Leg type: INIT, HVR, LAND, APPR, CRS, STOP, and T/F.)
L3 (FPLN ON/OFF)	Press to toggle flight plan on/off. Resets the current leg to 1 when the key is toggled to OFF.
L4 (FPLN ALRT)	Press to update and display any flight plan alerts that have been acknowledged and are still in effect.
L5 (SEQ▲)	Press to sequence pointer, backward through the legs list, adjacent to the desired leg for operator action.
L6 (LEG▼)	Press to sequence pointer, forward through the legs list, adjacent to desired leg for operator action.
L7 (LEG ADD)	Press to add the CDU leg information as a new leg to the flight plan.
R1 (NRP)	Press to access the NRP table page.
R2 (LEGS)	Press to access the flight plan leg page.
R3 (FPLN)	Press to access the flight plan summary page.
R4 (MAX RNG CIR)	Press to active the maximum range circle feature. (Maximum range of the aircraft at the present weight and fuel remaining. The circle will not appear until the maximum range has decreased below 45 nautical miles based on the available fuel.)
R5 (PG▲)	Press to display the previous MFD page in a multipage tabular display.
R6 (PG▼)	Press to display the next MFD page in a multipage tabular display.
R7 (LEG DEL)	Press to delete the leg adjacent to the MFD pointer from the flight plan.
	CDU Page 1 and 2
L1 thru L4 and R1 thru R4	Standard CDU default pages line key entries. Refer to paragraph 3-45, CDU Default Pages, for more details.

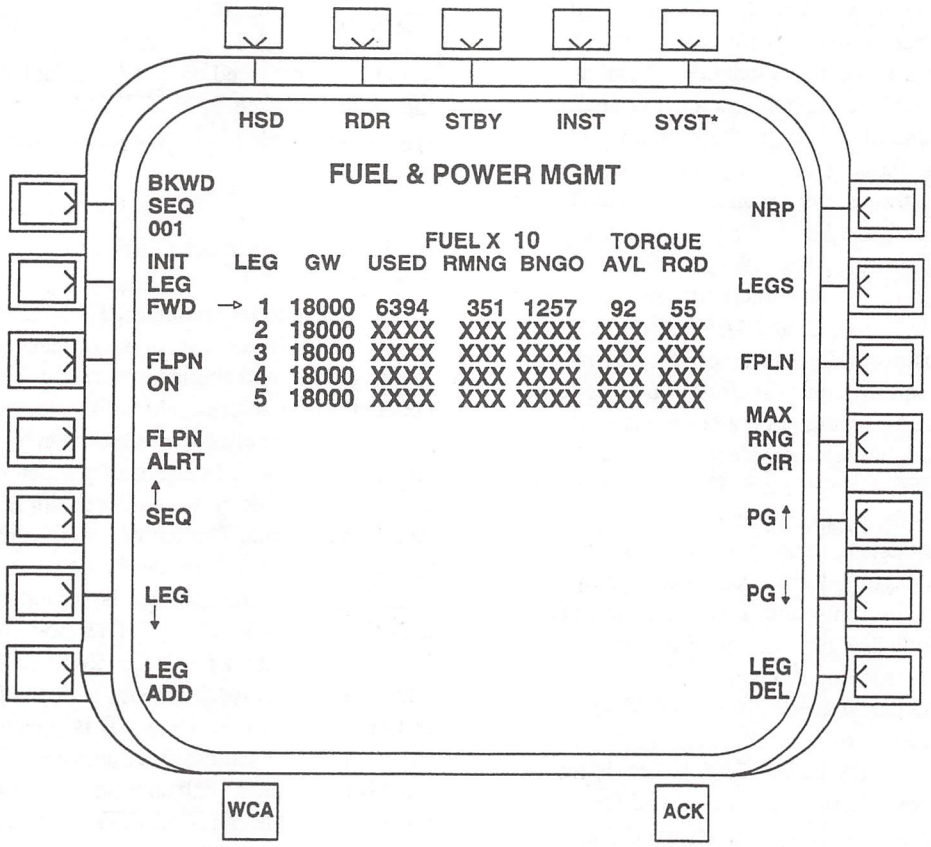

AK2482
SA

Figure 3-79. Fuel and Power Management Page

Section IV TRANSPONDER AND RADAR BEACON

3-174. IFF Transponder.

The IFF transponder set, APX-100 (Figure 3-80), consists of a receiver/transmitter and two antennas. The transponder set provides automatic radar identification of the helicopter to all suitably equipped challenging aircraft and surface or ground facilities within the operating range of the system. The transponder uses two antennas for receiving and transmitting transponder replies, one located on the top of the tailcone and one under the transition section behind the UHF-AM antenna. The transponder receives, decodes, and responds to the characteristic interrogations of operational modes 1, 2, 3/A, C, and 4A/4B. Specially coded identification of position (ID) and emergency signals may be transmitted to interrogating stations when conditions warrant. The transceiver can be operated in any one of five modes, each of which may be selected by the operator through the MFD IFF control page. The first three modes may be used independently or in combination. Mode 1 provides 32 possible coded combinations, any one of which may be selected in flight. Mode 2 provides 4096 possible coded combinations, but only one is available and must be set before flight. Mode 3/A provides 4096 possible codes of which one can be entered and selected in flight. Mode C, in conjunction with the barometric altimeter (AAU-32A), can indicate pressure altitude of the helicopter. There are three commonly used emergency codes: 7700 which is reserved for aircraft emergency, 7600 which is reserved for communications failure, and 7500 which is reserved for aircraft hijacking. Aircraft emergency (7700) and aircraft identification (IDENT) have dedicated CDU keys, SOS and ID respectively. Mode 4 is an external computer mode and can be selected to provide any one of many classified operational codes for security identification. A code must be inserted into the KIT-1C/TSEC before mode 4 is operational. Power to operate the IFF system is provided from the dc essential bus through a circuit breaker marked IFF on the circuit breaker panel located in the upper console.

a. Loading Mode 2 Codes. Mode 2 codes must be entered on the front panel controls of the IFF transponder receiver/transmitter unit located in the aft avionics compartment. These codes must be loaded prior to takeoff. To load mode 2 code, open the aft avionics compartment and locate the IFF receiver/transmitter. Use the pushbuttons to enter the assigned code for mode 2 operation. The STATUS indicators (black - normal, black/white - inoperative) identify problems with the transponder system when power is on.

b. Loading Mode 4 Codes. Mode 4 codes must be entered through the front panel controls of the KIT-1C/TSEC computer, located in the aft avionics compartment. These codes must be loaded prior to takeoff. To load mode 4 codes, attach the KYK-13 to the fill port and load codes. When the KYK-13 is connected and the KIT-1C/TSEC computer is powered on, pressing the load button will insert the codes into the KIT-1C/TSEC computer's memory. If the codes were loaded successfully, the load indicator light will flash.

3-175. Transponder Computer.

The transponder computer, KIT-1C/TSEC (Figure 3-81), is located in the aft avionics compartment. To enable IFF interrogations and replies and mode 4 operations, Mode 4 codes must be entered manually into the transponder computer while the helicopter is on the ground. These codes are electronically held in the transponder computer, independent of helicopter power, until the first time the helicopter becomes airborne. Thereafter, unless the code HOLD function is activated, the mode 4 codes will automatically zeroize when the transponder is turned off or power is removed from the helicopter. The mode 4 codes can also be zeroized using the ZEROIZE/EMERGENCY panel and the CDU page (Figures 3-45 and 3-46). Mode 4 operation is activated when mode 4A or 4B is selected on the MFD IFF control page. A caution message IFF FAIL will appear in the MFDs when a malfunction occurs during mode 4 operations and the KIT-1C/TSEC computer will not reply when interrogated. Power to operate the transponder computer is provided automatically when the APX-100 is on. The transponder computer KIT-1C/TSEC operation is classified.

3-176. Radar Beacon Transponder.

The radar beacon transponder (AN/APX-105) consists of an RT-1252/APX-105 receiver/transmitter, located in the nose avionics compartment. The radar beacon antenna is located on the right side of the nose door compartment. The radar beacon transponder provides the interrogating aircraft with range and bearing information of the MH60K's current position. It is normally used in conjunction with an aircraft which provides in-flight refueling. The refueling tanker interrogating equipment can determine range and bearing to the interrogated aircraft. A code must be entered for decoding radar interrogations and a code must be entered for encoding replies. Power to the radar beacon transponder is provided by the No.2 dc primary bus through a circuit breaker marked RDR BCN on the cabin overhead circuit breaker panel.

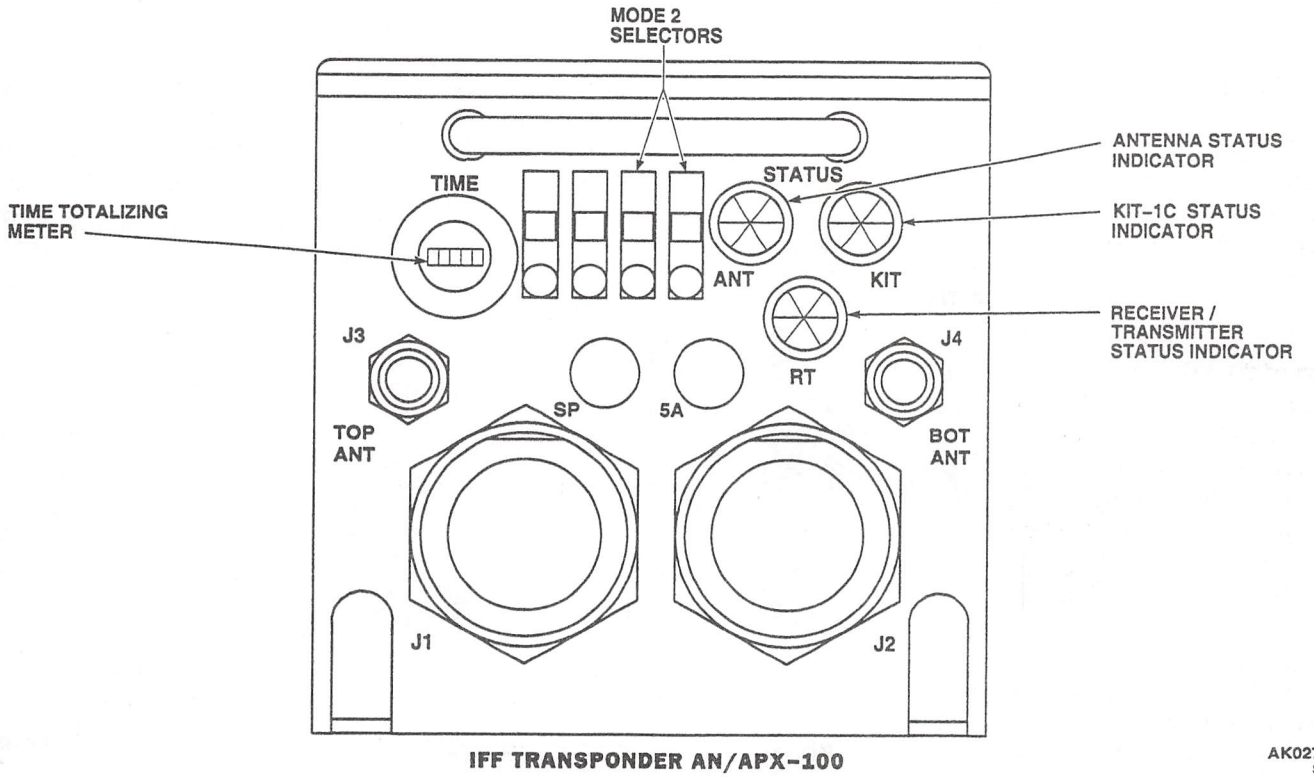

Figure 3-80. IFF Transponder Receiver/Transmitter

3-177. MFD IFF and Radar Beacon Transponder Control Pages.

The IFF and radar beacon transponder control pages allow entering required codes for IFF and radar beacon operations (Figure 3-82). Both systems have a standby mode, allowing the receiver/transmitter to remain in the ready state for immediate operation activation as required.

KEY/LEGEND	FUNCTION
	MFD Page
L1 (MODE 1)	Press to select or deselect IFF mode 1.
L2 (MODE 3A)	Press to select or deselect IFF mode 3A.
L3 (MODE C)	Press to select or deselect IFF mode 3C.
L6 (RAD TEST)	Press to activate the radiation test mode of the IFF. This test should be performed when in contact with an air traffic controller. When activated, the MODE 4 REPLY annunciator message should appear at the bottom of the MFD. Verify with air traffic controller whether or not the test signal was received.
L7 (BCN STBY, OPER or EMC)	Press to select the desired operating mode for the radar beacon transponder. (OPER - normal operation, STBY - standby mode, or EMC - emission control operation.)
R1 (MODE 2)	Press to select or deselect IFF mode 2.

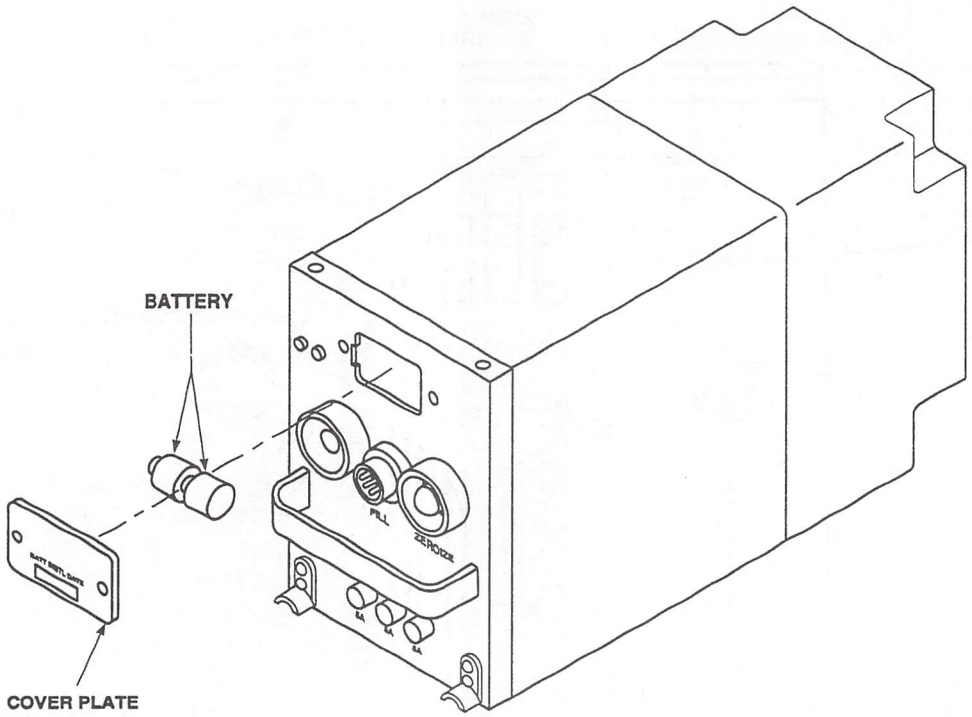

Figure 3-81. IFF Transponder Computer

KEY/LEGEND	FUNCTION
R2 (MODE 4, 4A, 4B)	Press to select or deselect the desired IFF mode 4 operation (mode 4, mode 4A, or mode 4B).
R3 (HOLD)	Press to activate the hold function to prevent codes in the KIT-1C/TSEC from being zeroized when helicopter power is turned off.
R4 (STAT ALRT, ALRT/AUD, AUD, and OFF)	Press to select the state of the IFF annunciator and alert for mode 4 interrogation. (ALRT - MFD messages only, ALRT AUD - MFD messages and audio, AUD - Audio only, and OFF - No messages or audio.)
R5 (IFF NORM, STBY or EMC)	Press to select the desired operating mode for the IFF transponder. (NORM - normal operation, STBY - standby mode, or EMC - emission control operation.)
R6 (ANT BOTH, TOP, BOT)	Press to select the desired antenna operation mode. (BOTH - uses top and bottom antennas, TOP - uses top antenna only, BOT - uses bottom antenna only.)
R7 (RTN)	Press to return to the current HSD, VSD, or HVR page.
L2 and L3	Not used.
	CDU Page
L1 (MODE 1 CODE)	Press to enter mode 1 code from the entrypad for use with the IFF transponder. Entrypad data range: 00 to 73 octal (highest number available for entry is 7).

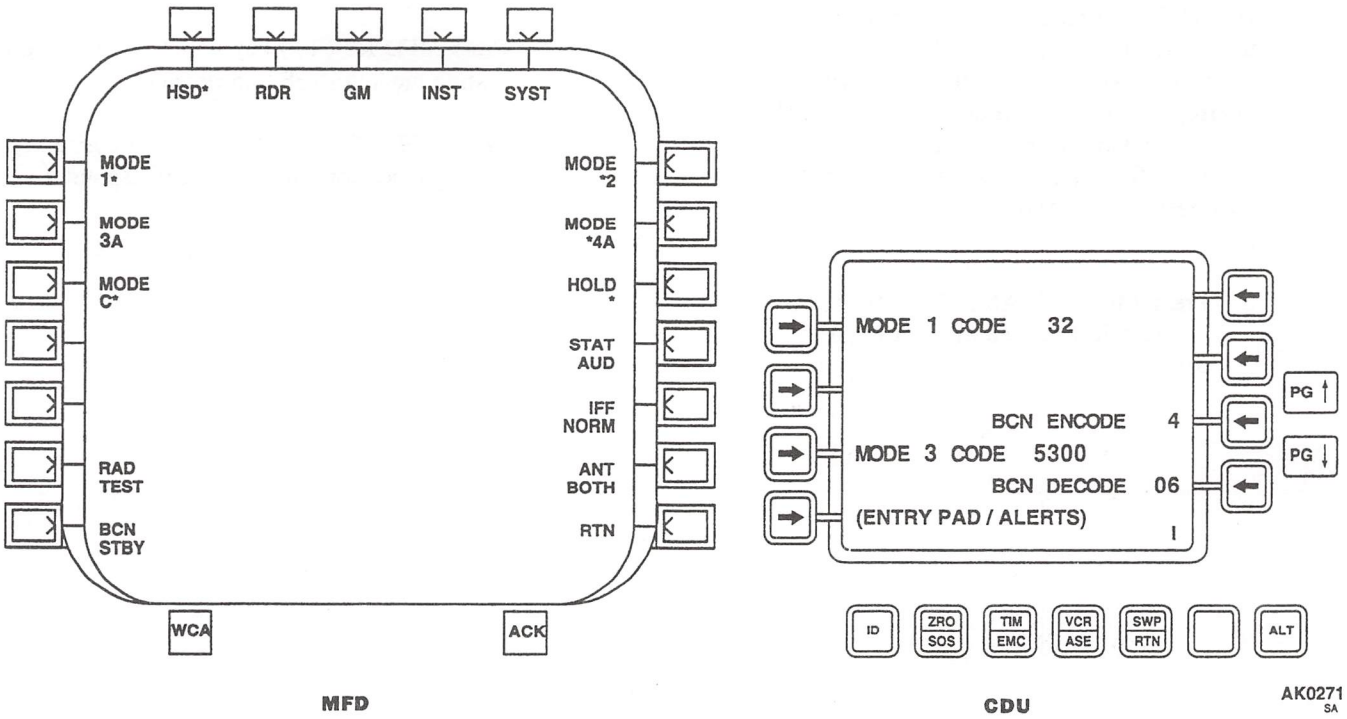

Figure 3-82. MFD and CDU IFF and Radar Beacon Transponder Control Pages

KEY/LEGEND	FUNCTION
L2 (MODE 3 CODE)	Press to enter mode 3 code from the entrypad for use with the IFF transponder. Entrypad data range: 0000 to 7777 octal (highest number available for entry is 7).
R3 (BCN ENCODE)	Press to enter the radar beacon encode value from the entrypad of the refueling aircraft. Entrypad data range: 1 to 6.
R4 (BCN DECODE)	Press to enter the radar beacon decode value from the entrypad for use with radar beacon replies. Entrypad data range: 1 to 11.

3-178. IFF Transponder and/or Radar Beacon Normal Operation.

NOTE

With all IFF modes selected, if any one of the IFF modes becomes unusable (e.g., zeroizing or removing Kit-1C), the IAP will display an IFF FAIL advisory message. To recover, deselect either MODE1, MODE 2, or MODE 3A and the IFF FAIL advisory message will clear and the remaining IFF modes will be usable.

1. Power on the IFF and radar beacon transponders using the procedures outlined under the equipment status pages as required.
2. Press MFD T1 key to select HSD, VSD, HVR primary page.
3. Press MFD L6 (IFF) key to display the IFF control page.
4. Enter the required IFF and radar beacon transponder codes into the CDU adjacent to the appropriate mode and/or beacon code.
5. Perform radiation test as required, using MFD L6 (RAD TEST) key. (Refer to descriptive data under control page for key purpose.)

NOTE

Use TOP antenna selection when interrogations and replays are expected from/to an interrogator above the aircraft, BOT when the interrogator is below the aircraft, and BOTH when the interrogator can be below or above the aircraft. Selecting the wrong antenna may result in interrogations not being received.

6. Press MFD R6 (ANT TOP, BOT, or BOTH) key to select desired antenna for IFF transponder.

7. Press MFD R4 (STAT) key to select desired alert mode for IFF transponder.

8. Press MFD R5 (IFF) key to select desired operating mode for IFF transponder.

9. Press MFD L7 (BCN) key to select desired operating mode for radar beacon transponder.

CHAPTER 4
MISSION EQUIPMENT

Section I MISSION AVIONICS

4-1. General.

Some MFD and CDU pages contain control functions for more than one system. All key functions that are associated with the page will be described; however, the procedure steps for the page being described does not mean each step must be selected or activated. Only those steps applicable to the system or equipment in operation should be selected. Systems/functions that are inoperative, turned off, or not installed may not display their key functions on the displayed page or those key functions may not toggle between their available selections. Verify equipment is operational and the mode is active for any function key that fails to respond when pressed. MFD symbology displays toggle between HSD, VSD, and HVR flight (T1 key).

4-2. Emissions Control.

Emission control (EMCON) is provided for radar and radio transmitters on the aircraft to prevent detection during certain operations. A CDU only emitter page allows direct access to key functions which controls aircraft emitters. The emitters are placed in a standby condition which inhibit transmissions; however, the reception capability is still functional. The Doppler, radar altimeter, and multi-mode radar can be inhibited individually. All emitters, aircraft survivability equipment (ASE), or communication equipment emitters may be inhibited as a group selection. To select EMCON operation, perform the following steps as required:

1. Press TIM/EMC key on the CDU, the EMCON page will appear (Figure 4-1).

NOTE

The VHF and UHF TONE key functions are not inhibited when EMCON is active.

2. Press L1 (ALL OPER or ALL STBY) key to inhibit or allow emissions from all aircraft emitters (STBY - inhibits all emissions).

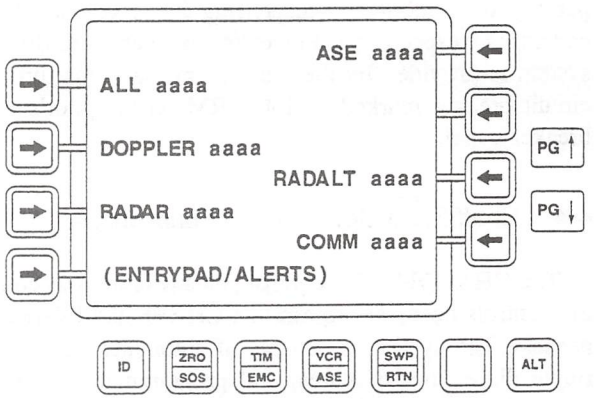

Figure 4-1. CDU Emissions Page

3. Press L2 (DOPPLER OPER or DOPPLER STBY) key to inhibit or allow emissions from the DOPPLER (STBY - inhibits DOPPLER emissions).

4. Press L3 (RADAR OPER or RADAR STBY) key to inhibit or allow emissions from the multi-mode radar (STBY - inhibits multimode radar emissions).

5. Press R1 (ASE OPER or ASE STBY) key to inhibit or allow emissions from all ASE (STBY - inhibits all ASE emissions).

6. Press R3 (RADALT OPER or RADALT STBY) key to inhibit or allow emissions from the radar altimeter (STBY - inhibits radar altimeter emissions).

7. Press R4 (COMM OPER or COMM STBY) key to inhibit or allow emissions from the communications equipment (STBY - inhibits all

communications equipment emissions, except VHF and UHF TONE key functions).

4-3. Chaff/Flare System.

The General Purpose Dispenser M-130 (Figure 4-2) consists of two system dispenser assemblies (one chaff and one flare), two payload module assemblies, one electronics module, CHAFF/FLARE control panel on the lower console, and the CHAFF/FLR switch on the collective grip. Chaff and flares provide effective survival countermeasures against radar guided weapon systems and infrared sensing missile threats. The chaff and flare dispensers have the capability of holding and dispensing 30 chaff and 30 flare cartridges, respectively. Power to the chaff/flare dispenser system is provided by the No.2 dc primary bus through a circuit breaker marked M-130 ARM on the pilot's circuit breaker panel.

4-4. Chaff/Flare Controls and Functions.

The CHAFF/FLARE control panel (Figure 4-2) contains the controls necessary to arm the CHAFF and FLARE dispensers. The system is capable of automatic, manual, and ripple dispensing of flares, and programmed and manual dispensing of chaff. Chaff and flares are dispensed manually using the collective CHAFF/FLR switch when the manual mode is selected on the CDU. A flares is dispensed automatically by the missile detection system (AN/AAR-47) when the automatic mode is selected on the CDU. Programmed chaff is enabled when the program mode is selected on the CDU. The values set on the electronic module assembly by the salvo and burst settings will determine interval and number of bursts when the collective CHAFF/FLR switch is pressed toward CHAFF while in the program mode. Ripple flare is initiated by setting the CHAFF/FLARE control panel switches to ARM and ON. The following controls are on the CHAFF/FLARE control panel:

CONTROL	FUNCTION
CHAFF/FLARE switch	
ARM	Enable chaff and flare dispensers to allow firing by the collective CHAFF FLR switch or the AN/AAR-47 system. Illuminates the CHAFF/FLARE ARMED message.
SAFE	Disables firing from the chaff and flare dispensers.
FLARE/RIPPLE switch	
ON	Manually fires all flare cartridges.
SAFE	Disables ripple firing of flare cartridges.

4-5. Dispenser Assembly.

The dispenser assembly (Figure 4-2) contains the breech assembly, C-F selector switch for either chaff or flares, a reset switch, and a housing containing the sequencer assembly. The sequencer assembly receives power through the firing switches circuit and furnishes pulses to each of the 30 contacts of the breech assembly, in sequential order 1 through 30, thus firing each of the impulse cartridges.

4-6. Payload Module Assembly.

The payload module assembly (Figure 4-2) consists of the payload module and retaining plate assembly. The payload module has 30 chambers which will accept either chaff or flare. The chaff or flare cartridges are loaded through the studded end of the module, one per chamber, and are held in place by the retaining assembly. The payload module assembly is mounted to the dispenser assembly.

4-7. Electronic Module Assembly.

The electronic module (Figure 4-2) contains a programmer and a cable assembly which includes a 28-volt supply receptacle and a safety switch, actuated by inserting the safety pin with streamer assembly. The programmer consists of a programming circuit which allows the setting of chaff burst number, chaff burst interval, chaff salvo number, and chaff salvo interval.

4-8. Electronics Module Controls.

Controls on the electronic module are used to setup the chaff dispenser for the program mode. Controls on the electronic module are as follows:

CONTROL	FUNCTION
SAFETY PIN	When inserted into the safety switch, prevents inadvertent dispensing of chaff/flares from that dispenser. (Inserted during ground operations only.)

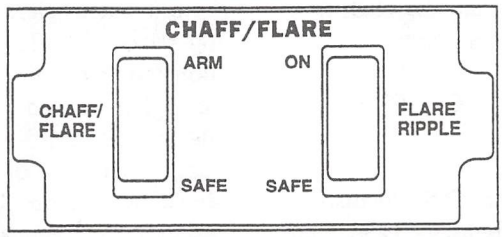

CHAFF / FLARE CONTROL PANEL

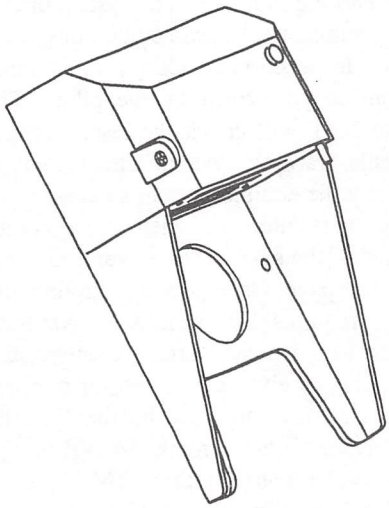

CHAFF / FLARE DISPENSER

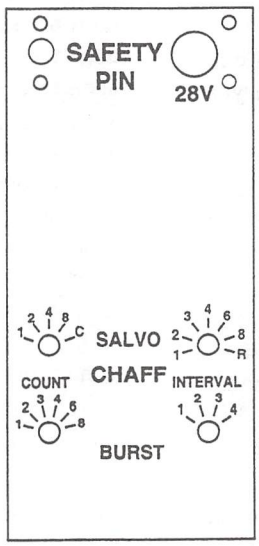

ELECTRONIC MODULE ASSEMBLY

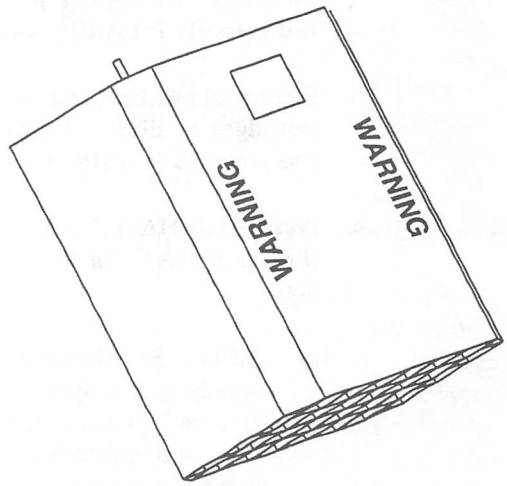

CHAFF / FLARE PAYLOAD MODULE ASSEMBLY

AK0054
SA

Figure 4-2. Chaff/Flare Dispenser System

CONTROL	FUNCTION
SALVO COUNT	Programs the number of salvos; 1, 2, 4, 8 or C (Continuous). A salvo can contain one or more bursts.
SALVO INTERVAL	Programs the time in seconds between salvos; 1, 2, 3, 4, 5, 8 or R (R = Random, e.g, 2, 5, 3, 4, 3).
BURST COUNT	Programs the number of bursts; 1, 2, 3, 4, 6 or 8.
BURST INTERVAL	Programs the time in seconds for burst intervals; 0.1, 0.2, 0.3 or 0.4.

4-9. Safety Procedures.

The safety pin shall be installed in the safety switch when the helicopter is parked. Safety pin is removed immediately before takeoff.

4-10. Chaff and Flare Normal Operation.

The flare system is capable of automatic or manual dispensing of flares. Selecting the AUTO mode for flare operations enables automatic dispensing of flares when the AN/AAR-47 senses a missile approaching. Chaff or flare cartridges are manually dispensed using the collective con-

trols. Dispensing of chaff and flares are inhibited when the aircraft has weight on wheels. To operate the chaff/flare system, perform the following steps as required:

1. CHAFF/FLARE switch on CHAFF/FLARE control panel - ARM.

2. Press VCR/ASE key on the CDU to display page 1 of the ASE pages (Figure 4-3) and enter data as required.

   a. Enter total number (maximum 60) of flare cartridges in dispenser into the entrypad and press R1 (FLARES) key.

   b. Enter total number (maximum 60) of chaff cartridges in dispenser into the entrypad and press R2 (CHAFF) key.

   c. Press R3 (CHAFF MODE) key to select (PROG or MAN) for chaff mode of operation.

      (1) PROG - Set dispenser to eject chaff cartridges as defined by the burst and salvo settings on the electronic module when the collective CHAFF FLR switch is pressed toward CHAFF.

      (2) MAN - Ejects one cartridge from the dispenser when the collective CHAFF FLR switch is pressed toward CHAFF.

3. Press PG▼ key to display page 2 of the ASE pages.

4. Press R2 (FLARE AUTO EJECT) key for desire mode of operation (ON or OFF).

5. R3 (CHAFF AUTO EJECT) key will toggle between ON and OFF (auto eject capability is not available).

4-11. Radar Warning Receiver.

The radar warning receiver AN/APR-39A(V)1 provides the pilots with visual and audio indications of radar surveillance, IR missile warning, CW missile warning, and laser designation systems. The system receives inputs from the continuous wave (CW) radar warning receiver, the missile warning system, and the laser warning receiver to aide in identifying laser, IR, and radar emissions. An indicator on the instrument panel (Figure 2-8 and 4-5) displays symbols representing the type of radar, IR, and/or laser emissions being detected, and the direction of the emission source from the helicopter. The system consist of two radar warning receivers R-2218/APR-39(V)1, two forward antennas mounted on the nose area, two aft antennas mounted on the tail pylon, and an antenna mounted on the bottom of the fuselage (Figure 3-6). The two forward and two aft antennas provide 360° of coverage for detection of radar emissions. In addition, low frequency emitters/threats are detected by the antenna mounted on the bottom of the aircraft. When an antenna detects an emitter signal, a symbol representing the type of emitter is displayed in the respective quadrant on the radar warning indicator. The system operational status is checked automatically by a continuous built-in-test (CBIT) routine. In addition to CBIT, an initiated built-in-test (IBIT) can be performed by the pilots. The radar warning receiver IBIT will check the laser warning receiver and the missile warning system. The system is powered on initially from the equipment status pages; however, subsequent power on is automatic when the helicopter aircraft power is applied, if the system was never turned off from the equipment status page. Once power is applied, the radar warning system requires 30 seconds to warmup. When power is applied to the radar warning receiver, the laser warning receiver also receives power. Power to operate the radar warning system is provided by the No.2 dc primary bus through a circuit breaker marked RWR on the cabin overhead circuit breaker panel. Refer to TM 11-5841-294-12, for additional information on the AN/ALQ-144A.

4-12. Radar Warning Receiver Controls and Functions.

CAUTION

Adjusting the intensity on the radar warning indicator CRT near its maximum level, may damage the CRT.

Operation of the radar warning receiver is controlled through the MFDs, CDUs, and radar warning indicator. The MFD allows the pilots to power on/off and initiate IBIT, and the CDU allows the pilots to select the operating mode. The following controls are located on the radar warning indicator (Figure 4-4):

CONTROL	FUNCTION
BRIL	Sets indicator display brightness. Turn clockwise to increase brightness and counterclockwise to decrease brightness.

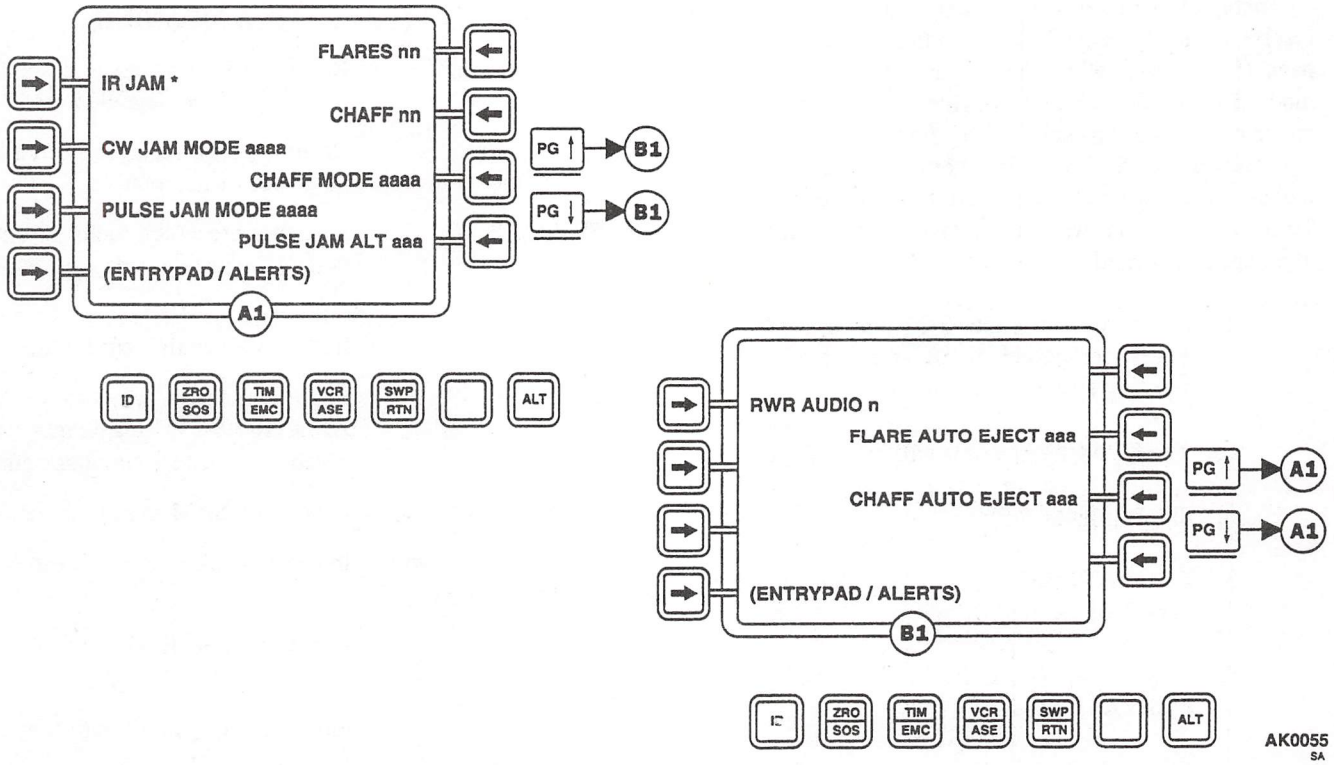

Figure 4-3. CDU ASE Pages

CONTROL	FUNCTION
MA (NIGHT/DAY)	Not used.
Switch (NIGHT/ DAY)	Not used.

4-13. Radar Warning Receiver Normal Operation.

CAUTION

Never operate the AN/APR-39A(V)1 within 60 yards of ground based radars or within six yards of airborne radar antennas. Operating the system closer than these limits may damage the antenna detectors.

NOTE

If the radar warning receiver is powered off, disregard the fail code on the equipment status page for the missile warning receiver. A failure code is normal for the missile warning receiver when the radar warning receiver is off.

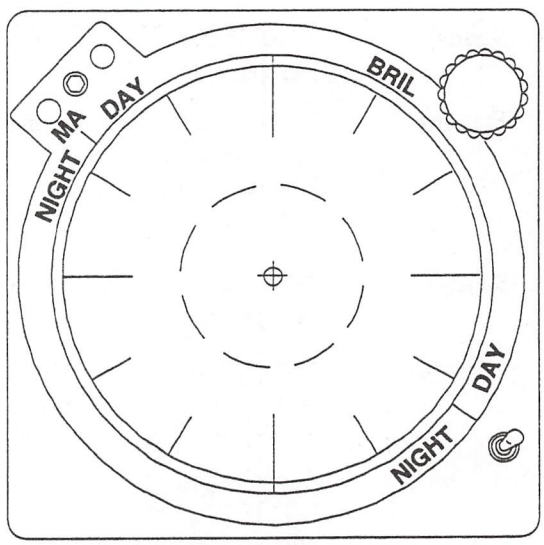

Figure 4-4. Radar Warning Indicator

There are two modes of operation for the radar warning receiver. The RWR AUDIO entry field on the CDU ASE page (Figure 4-3) allows the pilots to select mode 1 or mode 2 operation. Mode 1 provides full audio announcements of all emissions detected by the radar and laser warning receivers. Mode 2 provides shorter audio messages, and reduces audio distraction in dense emission environments. To operate the radar warning receiver, perform the following steps as required:

1. Refer to paragraph 3-37, Equipment Status Pages, for power on/off and test of the radar warning system, if required.
2. The following symbols will be displayed on the warning indicator during a test or failure condition (Figure 4-5):
3. Press VCR/ASE key on the CDU to display page 1 of the ASE pages.
4. Press PG▼ key on the CDU to display page 2 of the ASE pages.
5. Press L1 (RWR AUDIO) key to select the desired mode of operation (mode 1 or mode 2).

SYMBOL	MEANING
Asterisk *	
(Steady)	Laser detection test for that quadrant passed.
(Flashing)	Laser detection test for that quadrant failed. Laser emissions cannot be detected in that quadrant.
Triangle △	
(Steady)	Radar detection test for that quadrant passed.
(Flashing)	Radar detection test for that quadrant failed. Radar emissions cannot be detected in that quadrant.
Flashing Box □	Radar warning receiver system has failed C/D band test. Radar receiver will not detect signals in the C/D band.
Plus + Symbol	
(Steady)	Radar warning receiver system is powered on.
(Flashing)	Radar warning receiver system is operating in the degraded mode.
No Plus Symbol	Radar warning receiver system has no power or inoperative.
Flashing P	Indicates processor memory error, system indications may be unreliable.
Steady F	Indicates an equipment failure.
Steady S	Represents threat symbology when AN/APR-39A(V)1 antennas are tested with a radar simulator gun.
Flashing ◇	Indicates a SAM missile threat.
Flashing ◇ with steady ^ symbol	Indicates an AI missile threat.
Flashing ⊠ symbol	Indicates an AAR-47 fault.
Steady ⊠ symbol	Indicates a missile detection by the AAR-47 sensors.

4-14. Laser Warning Receiver.

The laser warning receiver (AN/AVR-2) detects laser emissions directed toward the helicopter. The system consists of a laser receiver and four sensor units mounted on the helicopter. When a laser emitter signal is detected by a laser sensor, a asterisk symbol representing a laser source is displayed in the respective sensor quadrant on the radar warning indicator. The two sensor units provide detection of laser emissions. The radar and laser warning receivers are powered on simultaneously by the equipment status pages. Once the radar warning receiver is powered on, the relay which provides power to the radar warning receiver also provides power to the laser warning receiver. The laser warning receiver is protected by a circuit breaker marked LASER WRN on the cabin overhead circuit breaker panel.

4-15. Laser Warning Receiver Controls and Functions.

The laser warning receiver IBIT and power on are controlled by the radar warning receiver. It is turned on and tested when the radar warning receiver is turned on and tested.

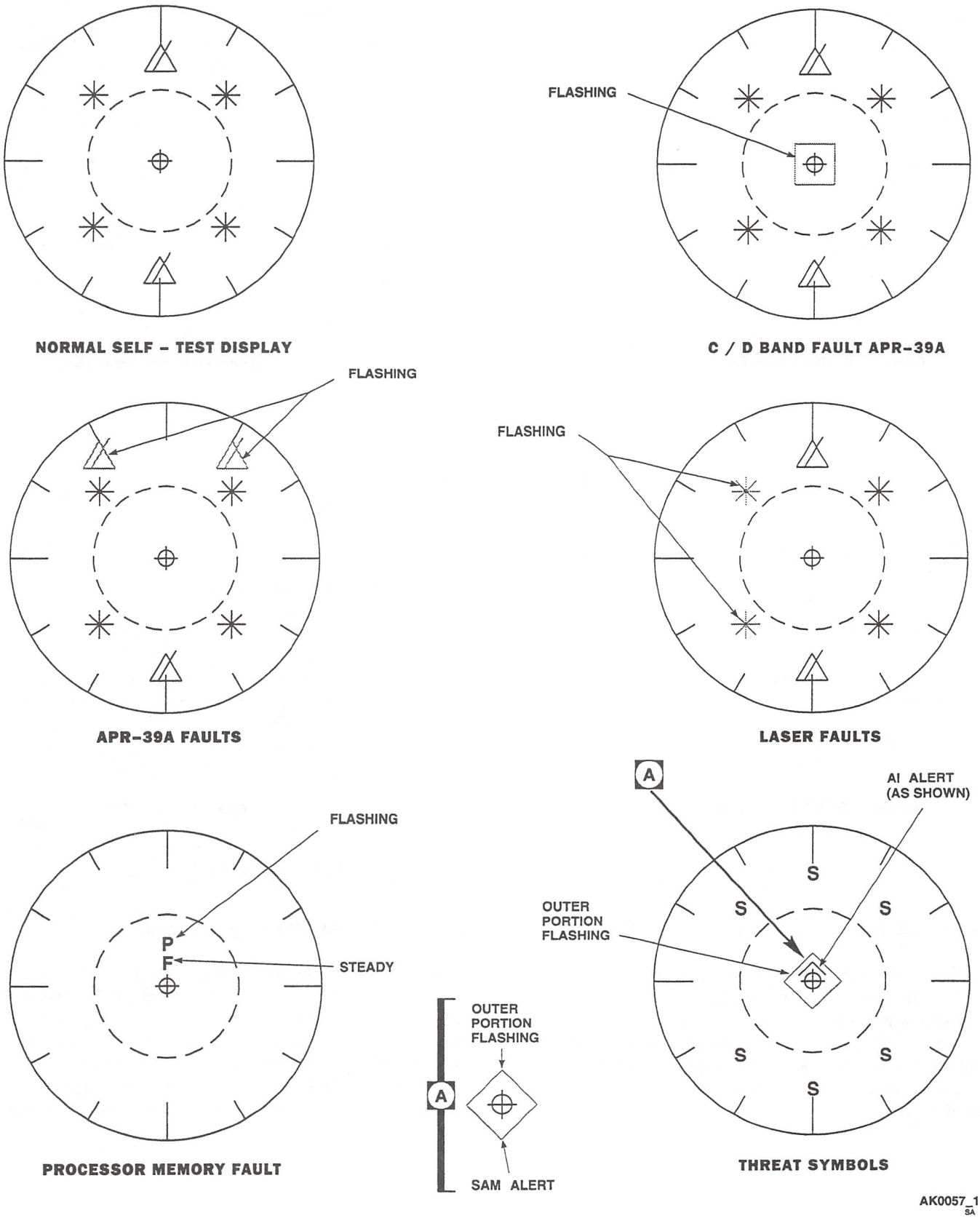

Figure 4-5. Radar Warning Indicator Test Symbols (Sheet 1 of 2)

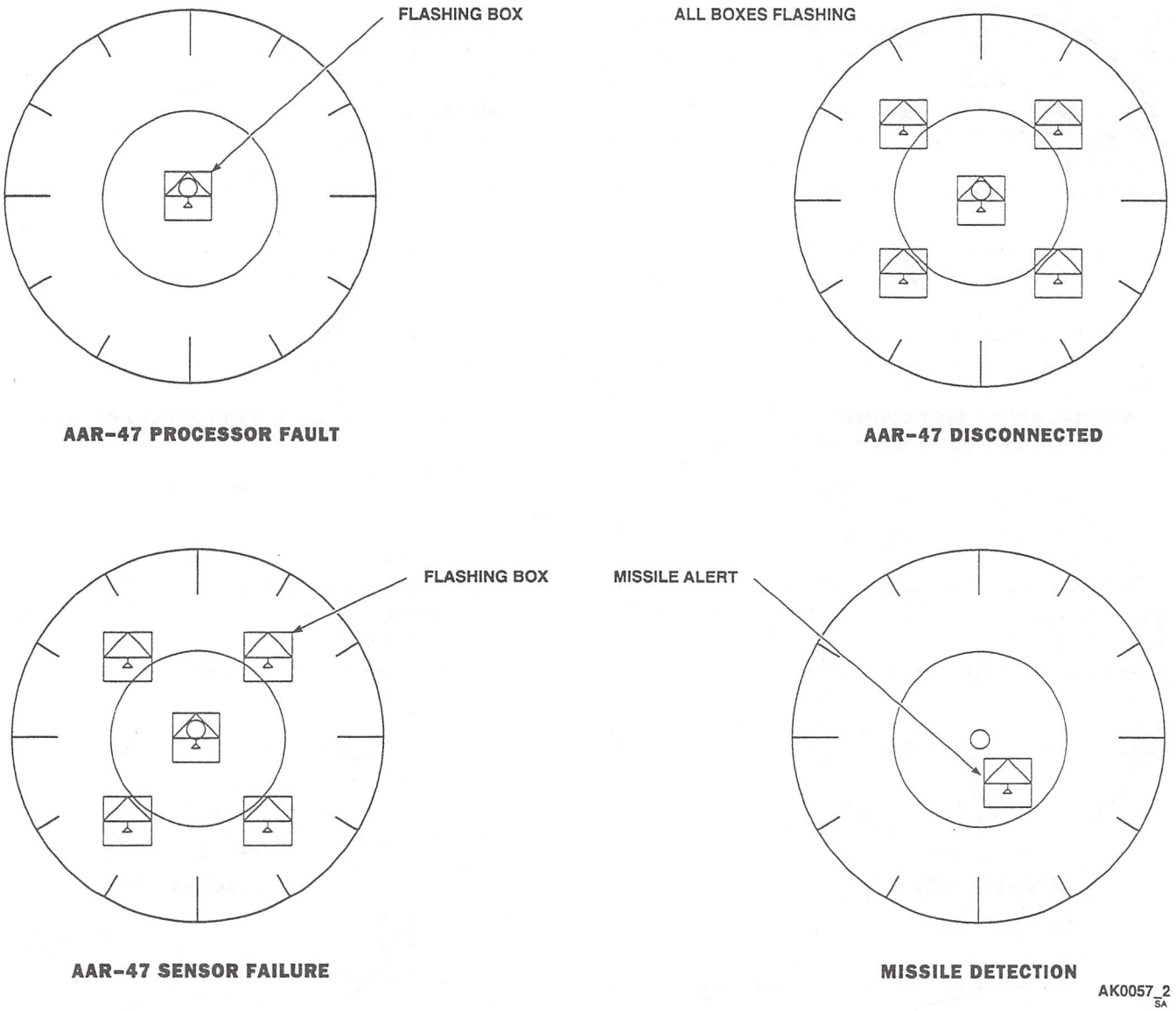

Figure 4-5. Radar Warning Indicator Test Symbols (Sheet 2 of 2)

4-16. Laser Warning Receiver Normal Operation.

The radar warning receiver must be on and operational before any laser emissions can be detected. There are no operator selected parameters for the laser warning receiver. Power on, off, and test is accomplished by the radar warning receiver controls. Refer to paragraph 3-37, Equipment Status Pages, for power on/off and test of the radar warning receiver, if required.

4-17. CW Radar Warning Receiver.

The CW radar warning receiver (AN/APR-44(V)3) detects continuous wave radar threats which are displayed on the AN/APR-39A(V)1 indicator. The system consists of three CW radar warning receivers (one R-2097/APR-44(V)3 surface-to-air missile (SAM) low-band and two R-2098/APR-44(V)3 airborne intercept (AI) high-band), two antennas mounted on the bottom of the fuselage for the

SAM receiver, one antenna on the nose area and one antenna on top of the tail pylon for the AI receiver (Figure 3-6). The primary purpose of the CW radar warning system is detection of radar guidance systems for surface-to-air and airborne intercept missiles. The system uses the radar warning indicator to display a symbol representing the type missile normally controlled by the radar emissions detected; also, the APR-39A voice message "CW, CW, Launch" will be heard in the pilot's helmet. When power is applied, the system will perform a BIT routine, AI and SAM symbols on the APR-39A(V)1 and "CW, CW, Launch" APR-39A voice message indicate a successful test. Power to the CW radar warning receiver is provided by the No.2 dc primary bus through a circuit breaker marked CW RWR on the pilot's circuit breaker panel. Refer to TM 11-5841-291-12, for additional information on the AN/ALQ-144A.

4-18. CW Radar Warning Receiver Controls and Functions.

The only control for the CW radar warning receiver is power on and off. Power for the CW radar warning receiver is controlled by the MFDs. Power on/off controls are located on page 5 of the MFD equipment status pages.

4-19. CW Radar Warning Receiver Normal Operation.

NOTE

If the CW radar warning receiver is not turned off from the equipment status pages before the helicopter is powered off, when power is restored, the CW radar warning receiver will automatically power on.

The radar warning receiver must be on and operational before any CW radar emitter detected can be displayed on the AN/APR-39(V)1 indicator. Refer to paragraph 3-37, Equipment Status Pages, for power on/off of the CW radar warning receiver.

4-20. Missile Warning Receiver.

The missile warning receiver (AN/AAR-47) detects plume emissions from a missile's exhaust. The system consist of a missile warning receiver, sensors on the left and right main landing gear struts and two sensors on the tail pylon (Figure 3-6). When the system detects the plume emissions from a missile, a "Missile, Missile, xx (2, 4, 8, or 10) O'Clock Launch" APR-39A voice message is heard, and a symbol will be displayed on the RWR indicator identifying the quadrant (2, 4, 8, or 10 O'Clock) of the incoming missile. Also, a flare eject signal is sent to the flare dispenser and if the flare AUTO EJECT mode is selected, a flare will be fired. When power is applied, the system will perform a BIT routine which will display any fault detected on the RWR indicator. Power to the missile warning receiver is provided by the No.2 dc primary bus through a circuit breaker marked MSL WRN on the pilot's circuit breaker panel.

4-21. Missile Warning Receiver Controls and Functions.

The only control available for the missile warning receiver is power on and off. Power for the missile warning receiver is controlled by the MFDs. MFD controls are located on page 5 of the MFD equipment status pages.

4-22. Missile Warning Receiver Normal Operation.

NOTE

If the missile warning receiver is not turned off from the equipment status pages before the helicopter is powered off, when power is restored, the missile warning receiver will automatically power on.

If the radar warning receiver is powered off, disregard the fail code on the equipment status page for the missile warning receiver. A failure code is normal for the missile warning receiver when the radar warning receiver is off.

The only control for missile warning receiver is power on/off. Refer to paragraph 3-37, Equipment Status Pages, for power on/off of the CW radar warning receiver.

4-23. Infrared Countermeasure Set.

WARNING

Do not constantly look at the infrared countermeasure transmitter (Figure 2-1) during operation, or for a period of over 1 minute from a distance of less than 3 feet. Skin exposure to countermeasure radiation for longer than 10 seconds at a distance less than 4 inches shall be avoided.

The IR jammer (AN/ALQ-144A) provides infrared countermeasure capability. The system transmits radiation modulated mechanically at high and low frequencies using

an electrically-heated source. A built-in test feature monitors system operation and alerts the pilot of a malfunction. The system consists of a transmitter (T-1360(V)) which is mounted on top of the main rotor pylon aft of the main rotor, and power on/off controls on the CDUs and MFDs. The IR jammer interfaces with the caution/advisory warning system through the RTUs. When power is applied, the source begins to heat, the servo motor and drive circuits are energized, which turns on the high and low speed modulators, and a signal is applied to stabilize system operations before energizing the built-in test function. After a warmup period of 1 minute, the stabilizing signal is removed and the system operates normally. The system has no operator initiated test sequence. A CBIT check is performed when the system power is turned on. Power is applied to the system when aircraft power comes on. A cooldown period occurs when the IR jammer is powered off. During the cooldown period, the servo motor drive circuits remain in operation, applying power to the motors that cause the modulators to continue turning, and the IRCM COOLDOWN annunciator message will be on. After the cooldown period, the power distribution and control circuits de-energize, all system operating voltage is removed and the IRCM COOLDOWN annunciator message will go off. If a malfunction occurs during system operation, the IRJAM FAIL caution message on the MFDs will go on and the cooldown period will begin automatically. The system may be returned to the operating mode by momentarily turning the IR jammer off, then on; however, only if the cause of the malfunction has cleared. The countermeasures system gets ac and dc electrical power from the No.1 ac and No.1 dc primary buses through circuit breakers marked IRCM PWRA and IRCM PWRB, respectively. Refer to TM 11-5865-200-12, for additional information on the AN/ALQ-144A.

4-24. IR Jammer Controls and Functions.

The only control available for the IR jammer is power on and off. Power on and off for the IR jammer is controlled by the MFDs and CDUs. MFD controls are located on page 5 of the MFD equipment status pages and page 1 of the CDU ASE pages.

4-25. IR Jammer Normal Operation.

NOTE

If the IR jammer is not turned off from the equipment status pages before the helicopter is powered off, when power is restored, the IR jammer will automatically power on.

The IR jammer should be powered off at least 2 minutes prior to aircraft shutdown to allow sufficient time for cooling of the heating element.

The are no operator selected parameters for the IR jammer except power on/off. The IR jammer can be powered on/off by the MFDs or CDUs, both procedures are listed below:

1. Refer to paragraph 3-37, Equipment Status Pages, for power on/off of the IR jammer through the MFD.
2. Press VCR/ASE key on the CDU to display page 1 of the ASE pages (Figure 4-3).
3. Press L1 twice, an asterisk appearing next to IRJAM indicates IR jammer is turned on.

4-26. CW Radar Jammer.

WARNING

Do not operate the CW radar jammer with personnel within six feet of the front and rear antennas. High frequency electromagnetic radiation can cause internal burns without causing any sensation of heat.

Turn off CW radar jammer prior to any refueling operation.

During EMC or standby operation, the CW RADAR JAMMING annunciator message will not be displayed and the "CW Radar Jamming" VWS message will not be heard.

NOTE

If the CW radar jammer is on when the backup hydraulic pump comes on line, the CW jammer will turn off momentarily then turn on after aircraft power has stabilized due to a power surge created when the hydraulic pump comes online.

The CW radar jammer (AN/ALQ-162(V)2) consists of a Receiver/Transmitter RT-1377 and two receive/transmit antennas, one antenna on the tail pylon and one antenna above the center windshield (Figure 3-6). The CW radar jammer detects and jams CW radar emitters in the operate mode and only detects CW radar emitters in the receive/EMCON mode. The CW radar jammer provides warning of

CW radar guidance system emissions. The crew is warned of approaching missile(s) by a CW RADAR LOCK or CW RADAR JAMMING annunciator message on the MFDs and "CW Radar Lock" or "CW Radar Jamming" audio messages transmitted by the VWS. A Built-In Test (BIT) automatically and continually tests system operations. In addition, A IBIT can be performed and a successful IBIT will be indicated by "CW Radar Lock," and "CW Radar Jamming," VWS messages. Malfunctions will be displayed as messages on the MFDs. The CW radar jammer can be structured to counter different threats by programming the program module assembly in the front of the receiver transmitter. The CW radar jammer is inhibited when the aircraft has weight on wheels. When power is applied, the CW radar jammer is inoperative for 3 minutes during warmup. Power to the CW radar jammer is provided by the No.2 ac primary bus through a circuit breaker marked CW RDR JAM on the copilot's auxiliary circuit breaker panel. Refer to TM 11-5865-229-12, for additional information on the AN/ALQ-162(V)2.

4-27. CW Radar Jammer Controls and Functions.

Operation of the CW radar jammer is controlled by the MFDs and CDUs. MFD controls are located on page 5 of the MFD equipment status pages and page 1 of the CDU ASE pages.

4-28. CW Radar Jammer Normal Operation.

NOTE

If the CW radar jammer is not turned off from the equipment status pages before the helicopter is powered off, when power is restored, the CW jammer will automatically power on to standby mode upon takeoff or weight-off-wheels.

If the CW radar jammer is in the normal mode of operation and the weight-on-wheels switch is actuated, the CW radar jammer will go to the standby mode. The pilot must manually reactivate the normal mode.

The CW radar jammer has four modes of operation. The operating mode is selected via page 1 of the CDU ASE pages. The missions requirements will determine the operating mode. To operate the CW radar jammer, perform the following steps as required:

1. Refer to paragraph 3-37, Equipment Status Pages, for power on/off and test of the CW radar jammer.
2. Press VCR/ASE key on the CDU to display page 1 of the ASE pages (Figure 4-3).
3. Press L2 (CW JAM MODE) key to select operating mode.
   a. OPER - Normal operations which enables receive and transmit capabilities for CW radar jammer.
   b. RECV - Enables receive capability of the CW radar jammer only.
   c. STBY - Places CW radar jammer in standby (receive and transmit capabilities inhibited).

NOTE

The CW radar jammer should be placed to standby before removing helicopter power.

   d. EMC - Inhibits the transmit capability of the CW radar jammer.

4-29. Pulse Radar Jammer.

WARNING

Do not operate the Pulse radar jammer with personnel within six feet of the front and rear antennas. High frequency electromagnetic radiation can cause internal burns without causing any sensation of heat.

Turn pulse radar jammer off prior to any refueling operation.

During EMC or standby operation, the PULSE FWD JAM and PULSE AFT JAM annunciator message will not be displayed and the "Pulse Jamming Forward" and "Pulse Jamming Aft" VWS messages will not be heard.

NOTE

If the pulse radar jammer is on when the backup hydraulic pump comes on line, the pulse jammer will turn off momentarily then turn on after aircraft power has stabilized due to a power surge created when the hydraulic pump comes online.

The pulse radar jammer (AN/ALQ-136(V)2) consists of a receiver transmitter RT-1149, two transmit antennas and two receive antennas. One transmit antenna is located under the tail section aft of the tail wheel and the other transmit antenna is above the center windshield (Figure 3-6). The receive antennas are on the nose and tailcone section. The pulse radar jammer provides warning of unfriendly fire control radar emissions. Signals detected from fire control radars are validated by the countermeasure set. Depending upon validation results, the system initiates jamming action and/or warns the crew of approaching missile(s) by displaying a PULSE FWD LOCK, PULSE AFT LOCK, PULSE FWD JAM, or PULSE AFT JAM annunciator message on the MFDs and "Pulse Jamming Forward" or "Pulse Jamming Aft" audio message transmitted by the VWS. Automatic jamming/warning decisions are determined by warning and jamming thresholds which are pre-programmed into the system. A voice warning system message informs the crew when the AN/ALQ-136(V)2 initiates jamming. A Built-In Test (BIT) continually tests system operations. Malfunctions will be displayed as messages on the MFDs. A successful test will be indicated by a blank STAT column adjacent to RFJAM on equipment status page 5. The pulse radar jammer is inhibited when the aircraft has weight on wheels. When power is applied, the pulse radar jammer is inoperative for 3 minutes during warmup. When one converter fails, the MISC SW panel CONV FAIL switch must be at the PULSE JAM ON position for the pulse jammer to operate. Power to the pulse radar jammer is provided by the No.1 ac primary bus through a circuit breaker marked RDR JAM on the cabin overhead circuit breaker panel. Refer to TM 11-5865-202-12, for additional information on the AN/ALQ-136(V)2.

4-30. Pulse Radar Jammer Controls and Functions.

Operation of the pulse radar jammer is controlled by the MFDs and CDUs. MFD controls are located on page 5 of the MFD equipment status pages and page 1 of the CDU ASE pages.

4-31. Pulse Radar Jammer Normal Operation.

NOTE

If the pulse radar jammer is not turned off from the equipment status pages before the helicopter is powered off, when power is restored, the pulse radar jammer will automatically power on to the standby mode upon takeoff or weight-off-wheels.

If the pulse radar jammer is in the normal mode of operation and the weight-on-wheels switch is actuated, the CW radar jammer will go to the standby mode. The pilot must manually reactivate the normal mode.

The pulse radar jammer requires a 3-minute warmup before it is functional. If use of the pulse radar jammer is anticipated, the pilot should begin the flight with the CONV FAIL switch at the PULSE JAM ON position.

The pulse radar jammer has two modes of operation. The modes of operation, high and low, determine the threat detection priority. If the high mode is selected, high altitude long range SAM threats are given detection priority. If the low mode is selected, low altitude short range SAM threats are given detection priority. The mode of operation is selected through page 1 of the CDU ASE pages. To operate the pulse radar jammer, perform the following steps as required:

1. Refer to paragraph 3-37, Equipment Status Pages, for power on/off and test of the pulse radar jammer.
2. Press VCR/ASE key on the CDU to display page 1 of the ASE pages (Figure 4-3).
3. Press L3 (PULSE JAM MODE) key to select desired operation.
   a. OPER - Normal operation enables receive and transmit capabilities for pulse radar jammer.
   b. STBY - Places pulse radar jammer in standby mode (receive and transmit capabilities inhibited).
   c. EMC - Inhibits transmit capability of the pulse radar jammer.
4. Press R4 (PULSE JAM ALT) key to select desired threat detection mode.
   a. HI - Selects high altitude long range surface-to-air missile threats as the pulse radar jammer detection/jammer priority.

NOTE

The pulse radar jammer should be placed in standby before removing helicopter power.

   b. LOW - Selects low altitude short range surface-to-air missile threats as the pulse radar jammer detection/jammer priority.

Table 4-1. Interference Blanker Unit Interface Signals

SEND SIGNALS TO IBU	RECEIVE SIGNALS FROM IBU
Pulse Radar Jammer Transmitter	CW Radar Jammer Receiver
CW Radar Jammer Transmitter	Pulse Radar Jammer Receiver
IFF Transponder Transmitter	IFF Transponder Receiver
Tacan Transmitter	Tacan Receiver
Radar Beacon	Radar Warning Receiver (high and low bands)
Radar Altimeter	
Multi-Mode Radar	

4-32. Interference Blanker Unit.

The interference blanker unit (IBU) provides blanking signals to certain on-board systems to eliminate radio frequency (rf) interference and prevent false alarms/signals when certain emitters are active. There are several emitters and receivers on the helicopter which operate in the same frequency band. The IBU prevents emitter signals from interfering with on-board receivers. When emitters are operating, a transmit signal is sent to the IBU to blank all receivers that may be affected by the rf energy being transmitted. Table 4-1 lists the systems which send and/or receive a blanking signal to/from the IBU. Failure of the IBU may result in false ASE warnings or no ASE warnings. Power to the IBU is provided by the No.2 ac primary bus through a circuit breaker marked IBU on the pilot's circuit breaker panel.

4-33. IBU Controls and Functions.

Operation of the IBU is automatic when system power is applied. The MFDs provide a test function for the IBU. This function is located on page 5 of the MFD equipment status pages.

4-34. IBU Operation.

The test function is the only IBU control available to the pilots. Refer to paragraph 3-37, Equipment Status Pages, for IBU test procedure IBU.

4-35. Video Cassette Recorder.

A video cassette recorder (VCR), SVCR-120RC, is provided for recording of forward looking infrared (FLIR) images with time and position data superimposed on the recording by the display processor. The VCR is located in the left avionics rack (Figure 3-7). The VCR is capable of recording up to 120 minutes of FLIR data. The system has a tone marking feature which allows the pilots to mark selected FLIR images during the recording phase. When viewing the tape, the tone will alert the viewers of the marked area(s) of interest. A tape can be viewed on any standard VHS recorder. Power to the VCR is provided by the No.1 ac primary bus through a circuit breaker marked VCR on the copilot's circuit breaker panel.

4-36. VCR Controls and Functions.

Operation of the video recorder is controlled by the MFDs and CDUs. MFD controls are located on page 2 of the MFD equipment status pages and the CDU VCR page.

4-37. VCR Normal Operation.

The VCR page turns on/off FLIR image recording and the flight data recorder. When FLIR RECORD is active, images received by the FLIR system are recorded on the VCR. When MSSN RECORD is active, the flight data recorder begins recording 1553B data bus information along with aircraft performance data of flight controls, engines, and transmissions. Performance data of flight controls, engines, and transmissions parameters are constantly being recording whether this key is active or inactive. To operate the VCR and/or flight data recorder, perform the following steps as required:

1. Refer to paragraph 3-37, Equipment Status Pages, for test of the VCR and flight data recorder.

2. Press ALT key on the CDU, then press VCR/ASE key to display VCR page (Figure 4-6).

3. Enter the amount of recording time (maximum 02.00.00 - nn.nn.nn) available on the tape into the entrypad area using the CDU data entry keys. Press L2 (TIME) key to enter entrypad time.

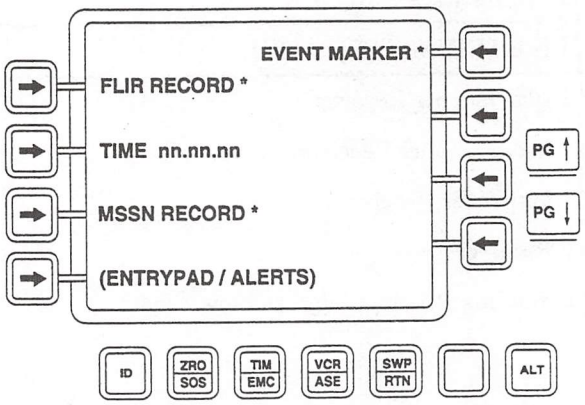

Figure 4-6. CDU VCR page

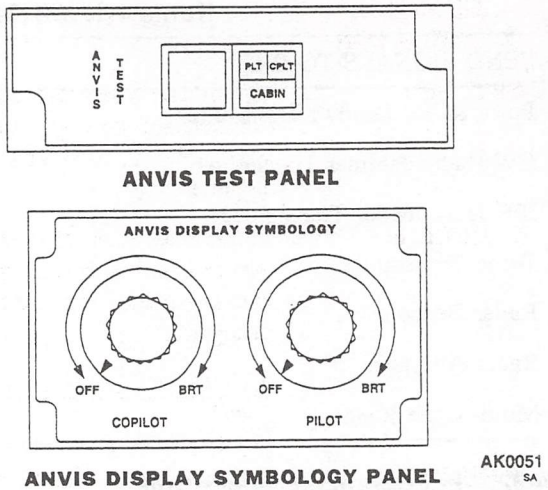

Figure 4-7. ANVIS TEST and DISPLAY SYMBOLOGY Panels.

NOTE

TIME will count down from the value entered to zero when FLIR RECORD is active.

4. Press L1 (FLIR RECORD) key twice will activate the VCR for recording of FLIR images. TIMED will appear momentarily next to FLIR RECORD. Upon activation of the L1 key (asterisk appears when active), the time value adjacent to L2 (TIME) key will start a count down toward zero.

5. Press L3 (MSSN RECORD) key twice to begin recording of 1553B data bus information (asterisk appears when active).

6. Press R1 (EVENT MARKER) key will activate a 5-second tone that will be superimposed on the tape. This tone will identify an area marked for special attention when viewing the tape.

4-38. Aviator Night Vision Imaging System (ANVIS).

ANVIS is controlled by two panels on the lower center console and the MFD FLIR control page. The ANVIS TEST panel provides crewmembers with electrical power to operate ANVIS compatible goggles (Figure 2-7 and 4-7). The ANVIS DISPLAY SYMBOLOGY panel provides illumination controls to adjust the intensity of the symbology displayed on the pilot and copilot night vision goggles. Refer to paragraph 4-44, FLIR MFD and CDU Control Pages, for turning on ANVIS symbology. Pilot and copilot ANVIS power receptacles are located on the door frame above and aft of the pilot's right shoulder and copilot's left shoulder. Crewchief and gunner power receptacles are on cords that suspend from the cabin overhead along with the ICS cords. The ANVIS TEST panel converts 115 vac to 3.8 vdc which provides the power for the ANVIS compatible goggles. Electrical power to the pilot, copilot, and crewmembers is provided by three separate power supplies; therefore, eliminating a single failure that could shutdown all goggles at the same time. Indicator lights on the ANVIS control panel marked PLT, CPLT, and CABIN will illuminate when the respective crewmember is using the ANVIS power receptacle and the TEST switch is pressed. Power to the ANVIS is provided by the No.1 and No.2 ac primary buses through circuit breakers marked PLT NVG PWR, CPLT NVG PWR, and CABIN NVG PWR. These circuit breakers are located on the pilot, copilot, and cabin circuit breaker panels, respectively. ANVIS also operate on their own internal battery source, if required. The following controls and indicators are on the ANVIS TEST and DISPLAY SYMBOLOGY panels:

CONTROL/ INDICATOR	FUNCTION
	ANVIS TEST Panel
Test switch	Press to test circuits and power available for crewmembers ANVIS receptacles. Helmets must be attached to receptacles to illuminate lights.
PLT light	Illuminates when the test switch is pressed and the pilot's helmet is attached to the pilot's ANVIS receptacle.

CONTROL/ INDICATOR	FUNCTION
CPLT light	Illuminates when the test switch is pressed and the copilot's helmet is attached to the copilot's ANVIS receptacle.
CABIN light	Illuminates when the test switch is pressed and a crewmember's helmet is attached to the cabin ANVIS receptacle.
	ANVIS DISPLAY SYMBOLOGY Panel
COPILOT	Adjust copilot ADS symbology from off to full bright. ADS symbology must be activated via the MFD FLIR control page.
PILOT	Adjust pilot ADS symbology from off to full bright. ADS symbology must be activated via the MFD FLIR control page.

4-39. Track Handle.

The track handle allows the pilots to position the MFD's target cursor, map display, and FLIR TFU to desired location (Figure 4-8). The track handle works in conjunction with an MFD selection to determine its assignment and operating mode. When required for slewing, the pilot must select the track handle on that system MFD page. When L5 (SLEW) is active on a system MFD page, the track handle will control that system target cursor and functions only. Power to operate the track handle is provided by the No.1 dc primary bus through a circuit breaker marked TRK HNDL on the cabin overhead circuit breaker panel. The pilot cannot slew the MMR directly with the track handle; however, if a FLIR update is performed using the MMR for ranging (AGR select), the IASS automatically causes the MMR to follow the FLIR line-of-sight.

4-40. Track Handle Controls and Functions.

The track handle has five switches which control movement of certain system functions when selected by an MFD. After a system has been selected on an MFD, these switches are dedicated to support that system. The following controls are on the track handle:

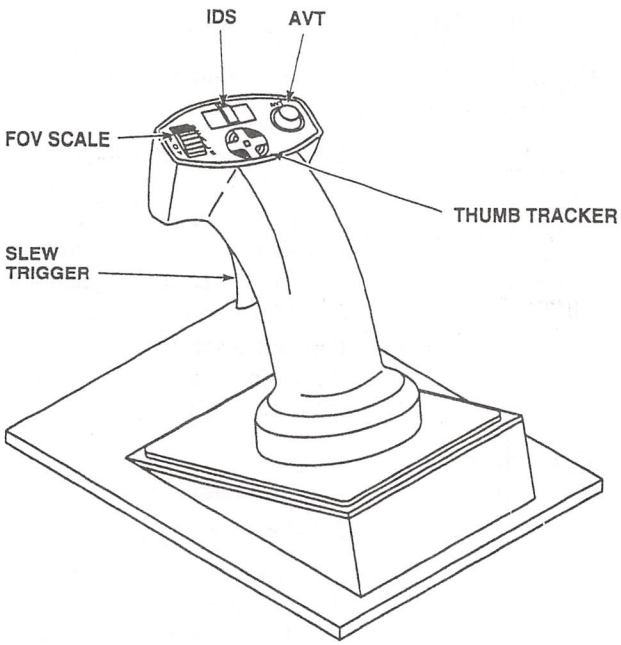

Figure 4-8. Track Handle Controls

CONTROL	FUNCTION
FOV SCALE (2 position switch)	Up or Down - Toggles FLIR FOV between wide and narrow mode. Also, increases the display range when MAP or MMR is selected.
IDS (infrared display system, 3 position switch)	Centered (compute) - FLIR TFU is controlled by the mission processor. (MFD T3 key options associated with this position are: AVT, FPV, ELEV, PT, and SCAN.)
	Left (MAN) - FLIR TFU can be moved by the thumb tracker control.
	Right (FWD) - FLIR TFU is aligned with the boresight reference.
AVT	A momentary pushbutton, toggles between slewing AVT box and changing AVT primary box sizes.

CONTROL	FUNCTION
Thumb Tracker	A switch with four pressure sensitive positions. Pressing the thumb tracker switch left, right, forward, or aft will move the target cursor, FLIR TFU, or map display in the respective direction. If utilized in conjunction with the AVT pushbutton, pressing the thumb tracker switch will change the AVT primary box size or will move the AVT box.
Slew Trigger (3 position switch)	Fully released position - thumb tracker control moves the MFD target cursor. First detent - FLIR TFU or map display will move in response to the thumb tracker control or acquire an AVT target. Second detent (fully pulled) - Performs a position update utilizing the FLIR or Map system. Also, performs a FLIR store.

4-41. Track Handle Operating Modes.

The track handle control enables several modes of operation: (1) Target cursor movement, (2) antenna/map display movement, (3) antenna alignment on target cursor, and (4) automatic video tracking for the FLIR system. To operate the track handle, refer to paragraph 4-39, Track Handle Controls and Functions.

a. Target Cursor Movement Mode. The target cursor movement mode enables the thumb tracker control to move the target cursor in the direction pressed on the MFD that has L5 (SLEW*) key active (slew trigger fully released).

b. Antenna and Map Movement Mode. The antenna and map movement mode enables the thumb tracker control to move the FLIR TFU or recenter the map display image in the direction pressed (slew trigger first detent). When using the track handle control, the selected system must be on and the respective system MFD page must have L5 (SLEW*) active. However, this does not apply to the FLIR system when the track handle IDS switch is at the right or left position.

c. Antenna Movement to Cursor Mode. The antenna movement to cursor mode enables the track handle slew trigger to move the center of the field of view for the FLIR TFU to the target cursor location (slew trigger to the first detent position).

NOTE

If an NRP update or store operation will be performed on a target/object being tracked, the target/object must be at the center of the screen (not offset) in order for the IASS to perform the location calculations correctly.

d. Automatic Video Tracking (AVT) Mode. The AVT mode enables continuous tracking of a selected point on the MFD FLIR image. The IDS track handle switch must be at the center position (compute). The pilot selects the AVT mode and track box by toggling MFD T3 key until AVT appears. Pressing the track handle AVT button enables the thumb tracker control to change the box size. The AVT box should be 20% to 50% larger than the size of the target/object. When the desired box size is achieved, pressing AVT button again, allows the locked-on AVT box to be moved within the video display. When the box is over the target, pulling slew trigger to the first detent position enables automatic tracking of target within the AVT box. Once a target is being tracked, the secondary box can be moved with the thumb tracker. The secondary box can be positioned on the original target or any other target. Pulling the track handle slew trigger to the first detent will cause the FLIR to switch to the second target for tracking and the first box disappears. This feature allows the pilot to set up the next target while automatically tracking the first target. The FLIR is capable of tracking only one target at a time, and the size of the secondary box cannot be changed.

4-42. Forward Looking Infrared System.

The forward looking infrared (FLIR) system (AN/AAQ-16B) detects infrared radiation. The system consists of a Turret/FLIR unit (TFU) and system electronics unit. The system interfaces with the track handle control for TFU movement, target cursor movement, and automatic video tracking. The system can operate during night, day, and adverse weather conditions. The FLIR system can be used for a variety of flight missions such as night pilotage, navigation, target recognition, low-level flight, search and rescue, avoidance of hazards at sea, and surveillance. The FLIR sensor converts infrared (IR) radiation patterns within its field-of-view (FOV) to a video format, which can be viewed on an MFD and/or taped by the video cassette recorder. When selected for display, as defined by the declutter configuration pages, navigation and flight data are superimposed on an MFD FLIR image. MFD pages associated with the FLIR system are identified by the FLIR system pages flow diagram (Figure 4-9). The FLIR cooling system requires approximately 10 to 18 minutes to reach its

operating temperature, the time required is determined by the outside air temperature. During cooling, a CBIT check is performed on the FLIR system. In addition to the CBIT, an IBIT can be performed by the pilot. However, IBIT checks should be performed while on the ground. The FLIR system requires periodic calibration, especially after a hard landing or TFU replacement. Power to the FLIR system is provided by the No.2 dc primary bus through a circuit breaker marked FLIR on the cabin overhead circuit breaker panel.

4-43. FLIR Operating Modes.

A FLIR image can be displayed on HSD, VSD, or HVR symbology. One of several modes can be selected: manual, forward, and computed pointing. T1 will toggle between HSD, VSD, and HVR symbology displays, T2 enables the selection of the FLIR mode, and T3 toggles between five computed pointing modes: AVT, FPV, ELEV, PT, and SCAN. The track handle controls allow the pilot to select between manual, forward, and computer pointing modes. The track handle controls provide TFU and target cursor movements during FLIR operations, and enable automatic video tracking (AVT). Refer to paragraph 4-39, for track handle operation.

a. Flight Path Vector or Elevation Mode. In the flight path vector (FPV) mode with FLIR video on, the FLIR tracks the aircraft's flight path. In the ELEV mode, the FLIR TFU is locked to the aircraft heading in azimuth only. When operating in the ELEV or FPV mode and ground speed is below 40 knots or FLIR video is off, the FLIR is automatically locked to the aircraft heading in azimuth and locked to the local horizontal in elevation and the FPV symbol is removed from the MFDs. This prevents undesirable images from being displayed which is caused by the flight path vector at slow ground speeds and at a hover. The FPV symbol returns when airspeed goes above 44 knots and FLIR video is on.

b. Point Mode. In the point (PT) mode, the FLIR initially points to the currently selected update NRP. There are two methods for moving the FLIR TFU while in the point mode: move target cursor to the FLIR image, then pull the track handle trigger to the first detent position for more than 0.5 second; or move the target cursor with the thumb tracker while holding the track handle trigger in the first detent position. The resulting ground point is tracked as the aircraft changes position and attitude.

c. Scan Mode. The scan mode enables the FLIR to search a 30, 60, 90, or 150 degree sector in front of the helicopter. The system allows the pilots to choose between three scan rates: low (4° per second), medium (14° per second), and high (28° per second). During forward scanning operations, the FLIR turret will stop if the thumb tracker switch is used to command the TFU greater than +35° or between -80 and -100 in elevation. During rearward scanning operations, the FLIR turret will stop if the thumb tracker switch is used to command the TFU less than -170° or between -80 and -100 in elevation. To restart the scan mode due to one of the above conditions, perform the followings:

1. Press track handle IDS switch at the left position (MAN).
2. Return the track handle IDS switch to the center position.
3. Reselect scan mode or any other operating mode.

4-44. FLIR MFD and CDU Control Pages.

Operation of the FLIR system is controlled through MFD and CDU pages. The FLIR control page provides primary control; however, other MFD and CDU pages are used for certain FLIR functions that are not on the FLIR control page. Figure 4-10 describes the functions of the FLIR control pages.

KEY/LEGEND	FUNCTION
	MFD Page 1
L1 (ADS DCLT 1, 2, or 3)	Press to select the desired declutter level for the ANVIS symbology that is displayed in the pilots night vision goggles.
	NOTE
	ADS declutter level selection affects both pilot's and copilot's ANVIS display.
L2 (BREAK LOCK)	Disengages FLIR from locked target.
L4 (FLIR ON or STBY)	Press to turn the FLIR system on or place in the standby mode.
L5 (SLEW)	Press to enable track handle thumb tracker switch to move that MFD's target cursor and/or move the FLIR antenna to the MFD's target cursor.
L6 (RATE 1, 2, 3, or 4)	Press to change the slew rate of target cursor (1 fastest rate).

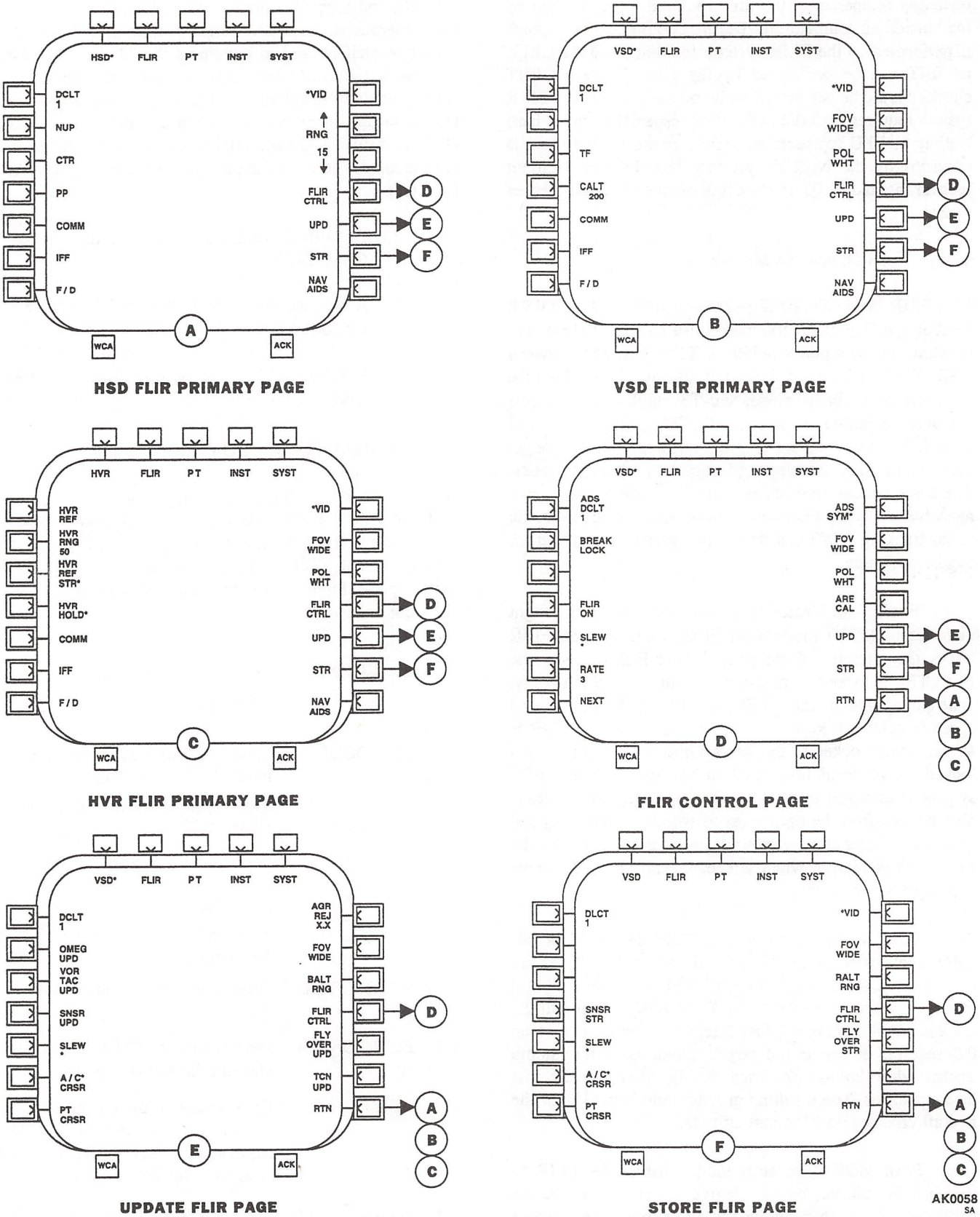

Figure 4-9. FLIR System Pages Flow Diagram

KEY/LEGEND	FUNCTION
L7(NEXT)	Press to display page 2 of the FLIR control pages.
R1 (ADS SYM OFF, AUTO, VSD, or HVR)	Allows the pilots to activate or deactivate ANVIS symbology and select the type of symbology AUTO, VSD, or HVR for display on the pilots night vision goggles.
R2 (FOV WIDE or NAR)	Press to select wide or narrow field of view (FOV).
R3 (POL WHT or BLK)	Press to select type of video being displayed. High concentrations of infrared signals are displayed as white or black as defined by this selection.
R4 (ARE CAL)	Maintenance Function - Initiates automatic responsivity equalization calibration of FLIR IR detectors.
R5 (UPD)	Press to access the update control pages.
R6 (STR)	Press to access the store control pages.
R7 (RTN)	Press to return to the current HSD, VSD, or HVR primary symbology page.
L3	Not used.
	CDU Page 1
L4 (Entrypad/Alert)	Standard CDU default pages line key entries. Refer to paragraph 3-45, CDU Default Pages, for more details.
R1 (FLIR GAIN/ LEVEL)	Press to select between automatic (AUTO) or manual (MAN) FLIR gain/level control mode. AUTO - Uses prestored parameters to automatically select the optimum video gain and level for the scene being viewed. MAN - Allows the pilots to set FLIR GAIN/LEVEL values to obtain the desired image.
R2 (FLIR GAIN)	Press to enter the gain value from the entrypad for FLIR GAIN during manual gain control mode. The FLIR GAIN represents the temperature range that the FLIR enhances. Higher gain settings produce a wider dynamic temperature range, sacrificing finer temperature detail. Entrypad data range: 1 to 64.
R3 (FLIR LEVEL)	Press to enter the level value from the entrypad for FLIR LEVEL during manual gain control mode. The FLIR LEVEL defines the temperature at which the FLIR will produce a medium gray signal (midway between black to white). Entrypad data range: 1 to 64
R4 (SYMBOL LEVEL)	Press to enter the symbol level value from the entrypad to adjust the contrast and brightness of the symbols on the display (soft key legend data, excluding FLIR video images). Entrypad data range: 1 to 10
L1 thru L3	Not used.
	MFD Page 2
L1 (BORE)	Maintenance function.
L2 (CALC)	Maintenance function.
L3 (SCAN WIDTH 30, 60, 90, or 150)	Press to select between 30, 60, 90, or 150 degrees for the sector scan width when the FLIR scan mode is activated.
L4 (SCAN RATE LOW, MED, or HI)	Press to select between LOW, MED, or HI for the FLIR TFU scan rate when the FLIR scan mode is activated. (LOW - 4° per second, MED - 14° per second, and HI - 28° per second.)
L5 (SLEW)	Same as L5 on page 1.
L6 (RATE 1, 2, 3, or 4)	Same as L6 on page 1.

KEY/LEGEND	FUNCTION
L7 (NEXT)	Press to display page 1 of the FLIR control pages.
R2 (FOV WIDE or NAR)	Press to select wide or narrow field of view (FOV).
R4 (GREY)	Press to turn grayscale on/off. Image is used to adjust MFD contrast and brigthness, thereby establishing a video reference point for optimum FLIR video.
R5 (HTR)	Press to prevent ice from forming on the TFU gimble ring.
R7 (RTN)	Press to return to the current HSD, VSD, or HVR primary symbology page.
R1, R3, and R5	Not used.
	CDU Page 2
L1 thru L3 and	Maintenance functions.
L4 (Entrypad/Alert)	Standard CDU default pages line key entries. Refer to paragraph 3-45, CDU Default Pages, for more details.
R1 thru R4	Not used.

4-45. FLIR Normal Operation.

WARNING

Ensure all personnel are clear of the TFU when power is applied or during an IBIT. The TFU will move when power is applied to the FLIR system or during an IBIT.

CAUTION

If not in use, the FLIR TFU should be stowed by placing the FLIR in standby to protect the germanium window.

NOTE

If the FLIR system is not turned off before removing power from the helicopter, when power is restored, the FLIR system will automatically power on.

1. Power on the FLIR system using the procedures outlined under the equipment status pages in Chapter 3, if required.
2. Press MFD T1 key to display HSD, VSD, or HVR symbology.
3. Press MFD T2 key to display FLIR. Refer to paragraph 3-44, HSD, VSD, and HVR Primary Pages, for mode and display selections. (Select mode and display as appropriate for type of image and symbols to be displayed.)
4. Place track handle IDS switch at the center position (center position is compute). AVT, FPV, ELEV, PT, or SCAN should be displayed under T3. (If STBY is displayed under T3 key, ensure power is turned on via the equipment status pages. Access FLIR control page via R4 [FLIR CTRL] key on the FLIR HSD, VSD, or HVR primary page [Figure 4-10], press L4 key twice to display FLIR ON, then press R7 [RTN] key to return to the FLIR primary page. FLIR parameters are unchangeable when T3 displays STBY.)
5. Press L1 (DCLT 1, 2, or 3) key to select desired declutter level.

NOTE

When VSD is selected, display orientation, centered or decentered mode, and present position are not available. These selections are replaced with terrain following and clearance altitude.

6. Press L2 (NUP, TRK UP, or HDG UP) key to select desired option for the HSD display. This selection determines the direction represented by the top of the MFD display (NUP - North, TRK UP - Course selected, or HDG UP - aircraft heading).
7. If HSD symbology is selected, press L3 (CTR or DCTR) key to select desired HSD display. (CTR - aircraft present position symbol is located in the center of the display; DCTR - aircraft present position symbol is located at the bottom of the display.)
8. Press R4 (FLIR CTRL) key to access the FLIR control page.

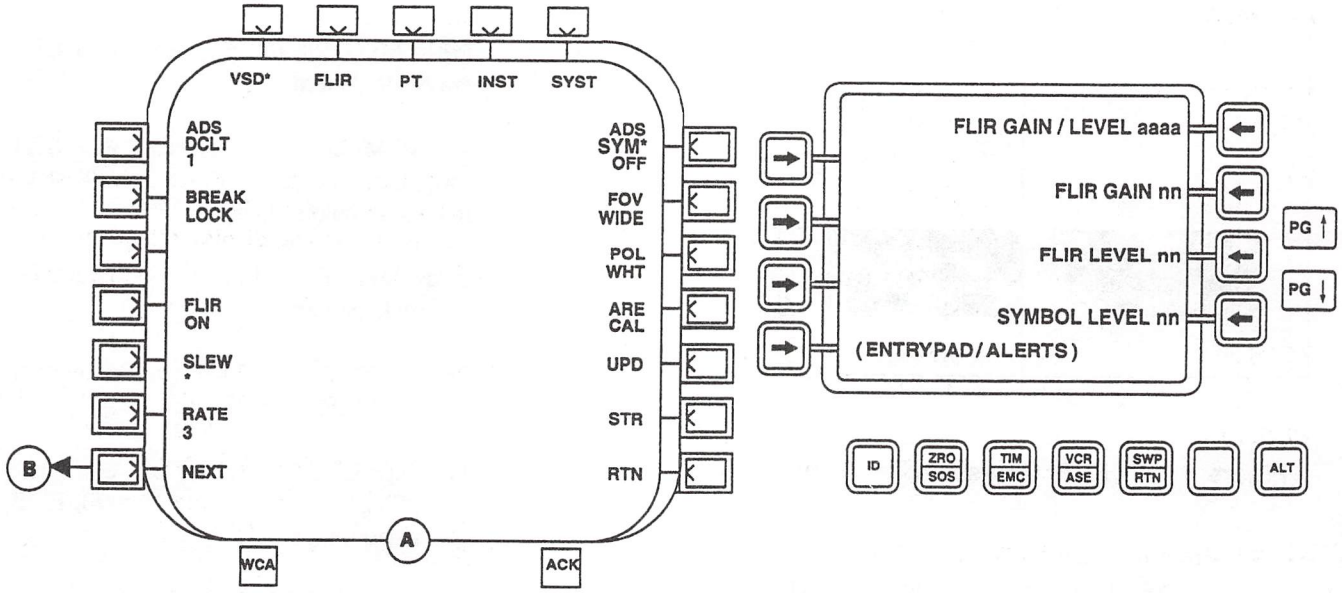

PAGE 1

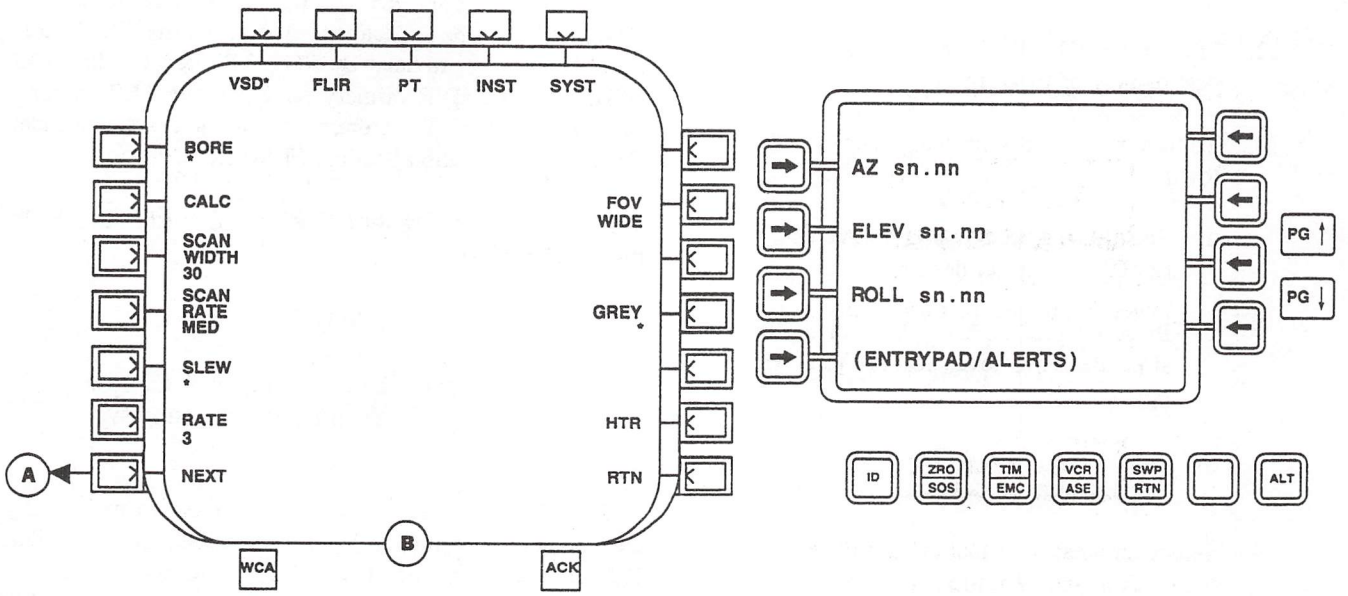

PAGE 2

AK0060
SA

Figure 4-10. MFD and CDU FLIR Control Pages

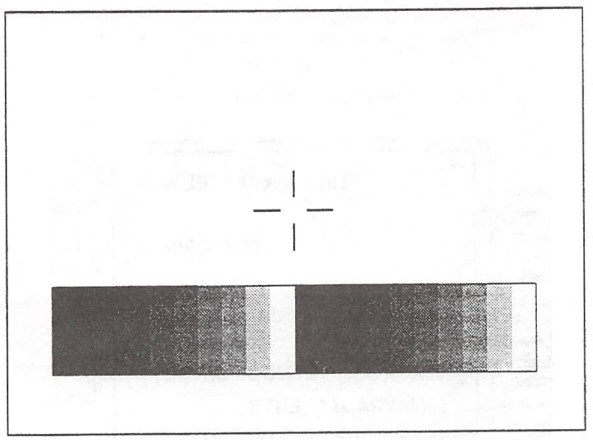

AK0061
SA

Figure 4-11. FLIR Grayscale Test Pattern

9. Press L5 (SLEW) key to activate track handle controls to move FLIR image target cursor and/or TFU.

10. Press L6 (RATE) key to select target cursor movement rate.

11. Press R2 (FOV WIDE or NAR) key for desired view of FLIR image.

12. Press R3 (POL WHT or BLK) key to select best display of FLIR image.

13. To turn on ANVIS symbology, perform the following:

    a. Press R1 (ADS SYM OFF, AUTO, VSD, or HVR) to select desired mode.

    b. Press L1 (ADS DCLT 1, 2, or 3) for desired declutter lever for ANVIS symbology.

    c. Adjust ANVIS DISPLAY SYMBOLOGY panel control as desired.

14. Select automatic or manual gain/level control for FLIR image as desired. When in the manual gain/level control mode, the gain and level values should be set to obtain the desired FLIR video image. For manual adjustments of FLIR GAIN and LEVEL value, perform the following (Figure 4-11):

    a. Press MFD R4 (FLIR CTRL) key to display page 1 of the FLIR control pages.

    b. Press MFD L7 (NEXT) key to display page 2 of the FLIR control pages.

    c. Press MFD R4 (GREY) key to display grayscale pattern.

    d. Adjust MFD CON (contrast) and BRT (brightness) controls to establish 20 separate block colors/shades.

    e. Press MFD R4 (GREY) key to turn off grayscale pattern.

    f. Press MFD L7 (NEXT) key to display page 1 of the FLIR control pages.

        (1) Enter CDU values for FLIR GAIN and LEVEL to obtain the desired FLIR video image.

        (2) Press MFD R7 (RTN) key to return to the primary symbology page.

4-46. Storing Coordinates Using the FLIR System.

The FLIR store pages allow marking a FLIR image location as an NRP. An image location can be marked and stored using the data received from the FLIR sensor or a flyover of the image location. Access to the FLIR store control pages is provided by R6 (STR) key on the FLIR HSD, VSD, or HVR primary page and the FLIR control page (Figure 4-9). The store procedure is described under Chapter 3, Navigation Section, FLIR Store.

4-47. Updating Present Position Coordinates With the FLIR System

NOTE

Updates cannot be performed with GPS or TRN selected as the primary navigation system.

The FLIR update pages allow the pilots to update aircraft position information based on FLIR sensor data. The FLIR system combines the aircraft's present altitude, as determined by the barometric altimeter and pressure altitude, with the NRP location, NRP altitude, MMR ranging data, and/or radar altimeter information when generating updating coordinates. Access to the FLIR update pages is provided by R5 (UPD) on the FLIR HSD, VSD, or HVR primary page and the FLIR control page (Figure 4-9). The update procedure is described under Chapter 3, Navigation Section, FLIR Update.

4-48. FLIR and Multi-Mode Radar Air-To-Ground Ranging.

NOTE

If a sensor update is performed using the MMR for ranging (AGR select), the IASS automatically causes the MMR to follow the FLIR line-of-sight.

The FLIR system is capable of using the air-to-ground ranging (AGR) capability of the MMR to provide range information to the target cursor on the FLIR image. This capability requires the MMR, two MFDs, and the FLIR system to be in the PT mode with the MMR powered on. The procedure for FLIR and AGR ranging is described under Chapter 3, Navigation Section, FLIR Update.

4-49. Multi-Mode Radar.

The multi-mode radar is a forward looking airborne radar primarily used for terrain following (TF) and terrain avoidance (TA) (Figure 2-1). The system consists of an antenna and a receiver/transmitter unit mounted in a self-contained pod assembly in the nose of the helicopter, and a radar data processor mounted under the pilot compartment. There are three primary operating modes for the MMR: terrain following (TF), terrain avoidance (TA) and ground mapping (GM). When TF guidance is selected, two TF submodes, maximum turn rate, and power management (PMGT) are provided. TF options of normal (NORM), electronic counter countermeasures (ECCM), weather (WTHR), and electronic counter countermeasures/weather penetration (ECCM/WP) are available selections to enhance performance in special environments. NORM is used to provide optimum performance when adverse weather or jamming/electronic countermeasures are not anticipated or evident. ECCM is used to counter suspected jamming/ECM operations. WTHR allows TF operations to continue in adverse weather. ECCM/WP is used to counter suspected jamming/ECM operations in adverse weather. The ECCM option is not available in the PMGT submode. Combination modes of TF/TA and TF/GM are also available. AGR is utilized to provide radar range to the terrain designated by the target cursor in the FLIR/AGR sensor update mode. MFD pages associated with the MMR system are identified by the MMR system pages flow diagram (Figure 4-12). Table 4-2 identifies the modes available for certain operator selections during MMR operations.

CAUTION

When TF is active and aircraft groundspeed is approximately 40 knots or below, LO SPEED TF is displayed.

When TF is active and aircraft airspeed is approximately 10 knots or below, OBSTACLE warning, TF DATA BAD, MANEUVER LIMIT, TF NEAR RANGE, LO SPEED TF, EXCESS DRIFT, and CLIMB LIMITED annunciator alerts are inhibited and RALT IN CONTROL is displayed.

a. Terrain Following (TF) mode. When TF is active, the MMR supplies vertical commands to the flight director which in turn provides a collective cue on the VSD which allows terrain following operation. Depending on mission requirement, a clearance altitude (CALT) of 500, 300, 200, 150, or 100 feet and a ride control (RIDE) of SOFT, MED, or HARD may be selected. If for some reason (i.e., turning, not following collective cue, etc.) a terrain point is detected by the MMR that would require more than the available HARD ride climb angle to clear at the selected clearance altitude, a "TERRAIN AHEAD" voice warning and an OBSTACLE warning message on the MFDs. Along with the voice and MFD messages, a full climb cue will be displayed. In this case, full climb at the best climb speed should be initiated. The MTR submode provides the maximum azimuth coverage and the maximum allowable TF turning rate. The PMGT submode reduces the radar energy being emitted by the aircraft. This reduces the possibility of being detected by enemy surveillance systems; however, the allowable turning rate is reduced and the 100-foot clearance altitude is not allowed. When TF is active and groundspeed is above 40 knots, a bank angle limit indicator (Figure 3-49) is provided on the VSD display to indicate the maximum bank angle allowed to avoid exceeding the TF envelope.

b. Terrain Avoidance mode. The TA mode displays a plan view of all radar returns above the aircraft to provide information for manually avoiding terrain obstacles. TA display stabilization changes to the track up (TRK UP) for groundspeeds above 8 knots (approximately) and heading up (HDG UP) for groundspeeds of 5 knots (approximately) and below.

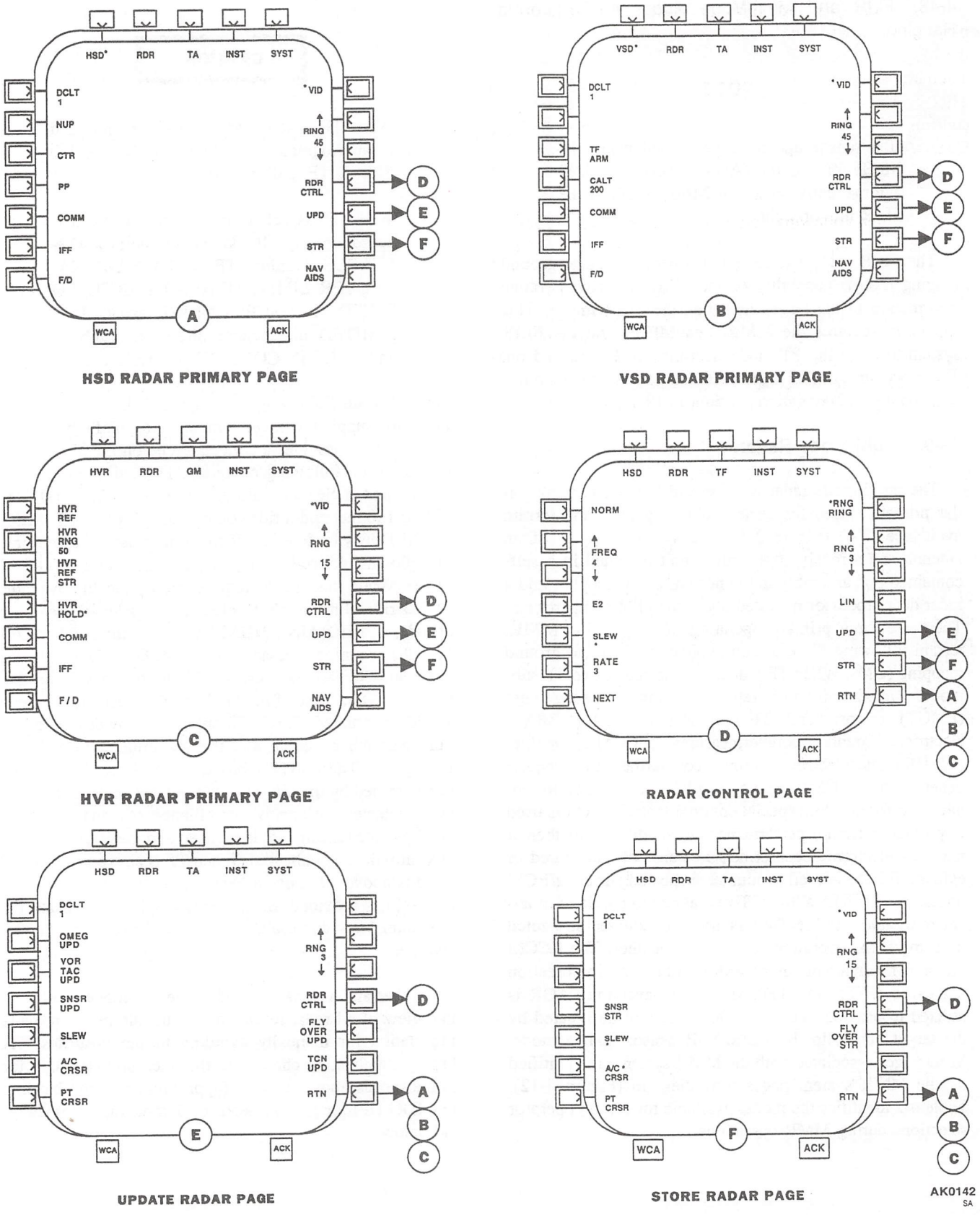

Figure 4-12. MMR System Pages Flow Diagram

c. Ground Mapping (GM) mode. The GM mode displays a plan view of the terrain surface feature detected by the MMR. The tilt angle (ANTENNA TILT) of the MMR antenna can be adjusted, along with attenuation (GM ATTEN), threshold (GM THRESHOLD), and gain (GAIN) controls on the CDU to optimize the GM video display. During GM operations, track up or heading up can be selected for the MFD display orientation.

d. Terrain Following/Terrain Avoidance (TF/TA) combination mode. The TF/TA mode combines the operation of TF and TA modes. In the TF/TA mode, azimuth and elevation scans are time shared. Terrain following and terrain avoidance information will be available for display simultaneously. Terrain following information will be generated during the elevation scan and terrain avoidance generated during the azimuth scans. TF/TA display stabilization changes to the track up (TRK UP) for groundspeeds above 8 knots (approximately) and heading up (HDG UP) for groundspeeds of 5 knots (approximately) and below. When the TF/TA mode is active, the display ranges available are: 3, 5, 10, and 15 nautical miles.

e. Terrain Following/Ground Mapping (TF/GM) combination mode. The TF/GM mode combines the operation of TF and GM modes. In the TF/GM mode, azimuth and elevation scans are time shared. Terrain following and terrain avoidance information will be available for display simultaneously. Terrain following information will be generated during the elevation scan and ground mapping generated during the azimuth scans. When the TF/GM mode is active, the display ranges available are: 3, 5, 10, 15, 30, and 45 nautical miles.

f. E2 Video Display. The E2 video displays a profile view of the terrain/obstacles detected within the range selected on the MMR. Radar returns are based on line-of-sight; therefore, low areas can be concealed behind hills/mountains on an E2 video display. A zero command line, a zero pitch horizon line, stored terrain points, terrain video (radar returns), and an azimuth bar with a vertical scan indicator are included on the display. Refer to Figure 4-14, for E2 display. The following indicators are provided on E2 video display:

INDICATOR	FUNCTION
Range Scale	Display radar coverage in nautical miles.
Radar Return	Displays terrain features in a profile view as detected by the MMR.
	WARNING The zero command line is provided for information only. This information is not intended or designed to provide any type of climb/descend flight cues to the pilot.
Zero Command Line	It is a height versus distance line in front of the aircraft that represents the future positions at which radar returns (terrain) will cause a zero collective command to be generated. Radar returns above the zero command line will cause a pullup command and radar returns below the zero command line will cause a descend command. If command cues are followed within a reasonable time frame, the radar returns will show terrain that tends to move along the zero command line. Terrain extending above the zero command line indicates the aircraft is to low, and terrain well below the zero command line indicates the aircraft is above the desired flight path. The zero command line shape will vary as aircraft parameters values changes (i.e., current climb angle, ground speed, and vertical flight path vector angle).
Zero Pitch Horizon	Shows the terrian intersect point at which the aircraft will impact if level flight and the current altitude are maintained.
Azimuth Bar	Represents all possible azimuth angles that the radar could use.

Table 4-2. Multi-Mode Radar Operating Modes

OPERATOR SELECTION	MODES AVAILABLE
L4 radar control page 2 (RDR ON, STBY, or ECM)	
EMC (EMCON Active)	None (Radar in standby condition)
STBY ON (See modes below)	None (Radar in standby condition)
VSD RDR SYMBOLOGY	
L1 (NORM, WTHR, or ECCM) on VSD radar control page 1 (PMGT submode is available only if NORM or ECCM is selected)	
L3 (TF or TF ARM) on VSD RDR primary page or E2 active on radar control page 1	
	NOTE When PMGT submode is selected, radar video is automatically disabled.
T3 selections available	TA, MTR, PMGT, TF/GM, or TF/TA (AGR is displayed when FLIR air-to-ground ranging is selected)
L3 (TF INACT) on VSD RDR primary page or E2 inactive on radar control page 1	
T3 selections available	TA.
HSD RDR SYMBOLOGY	
L1 (NORM, WTHR, or ECCM) on VSD radar control page 1 (PMGT submode is available only if NORM or ECCM is selected)	
T3 selections available	GM or TF/GM

INDICATOR	FUNCTION
Vertical Scan Bar	This symbol depicts at what azimuth angle the vertical scan is occurring. For MTR (straight ahead flight) and PMGT submodes, the vertical scan bar is at the center of the azimuth. For MTR (turning flight), TF/TA, and TF/GM modes, this symbol will move left or right to show where the MMR is currently looking and generate radar returns on the E2 display.

4-50. Radar Control Pages.

The radar control pages allow the pilot to toggle between ON and STBY for the MMR, select operating mode(s)/options, and establish additional operating parameters for the MMR. When MFD radar control page 1 is displayed, the respective CDU radar control page will appear (Figure 4-13).

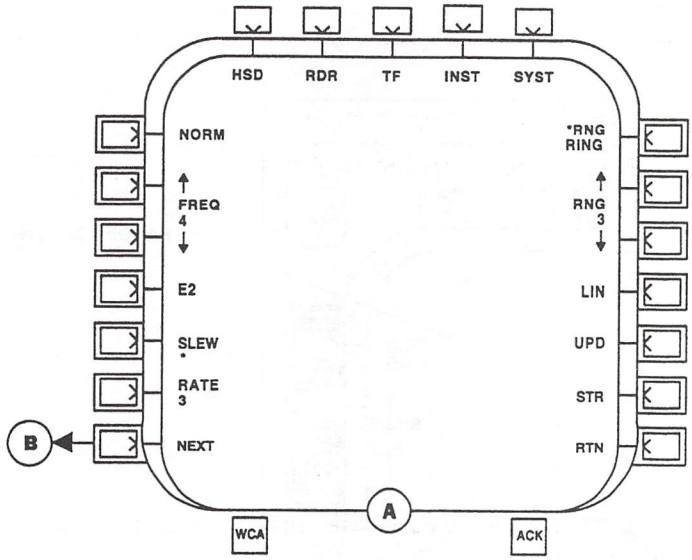

PAGE 1

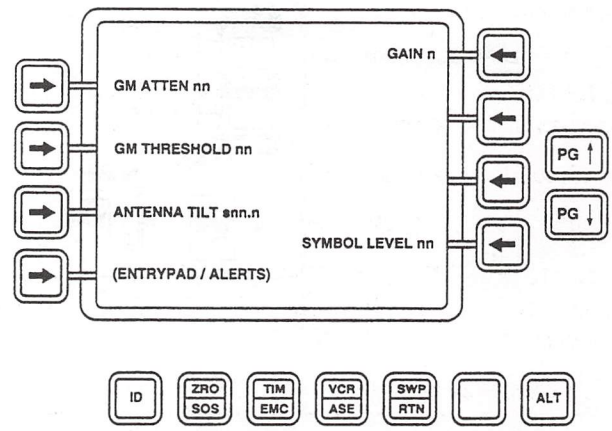

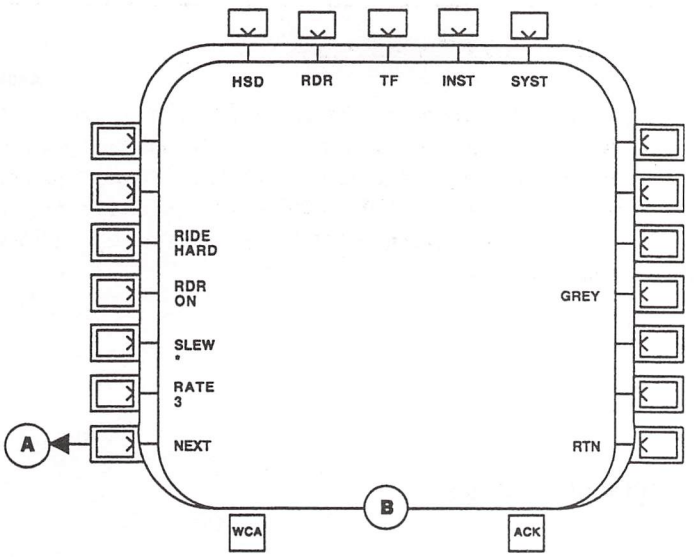

PAGE 2

AK0144
SA

Figure 4-13. MFD and CDU Radar Control Pages

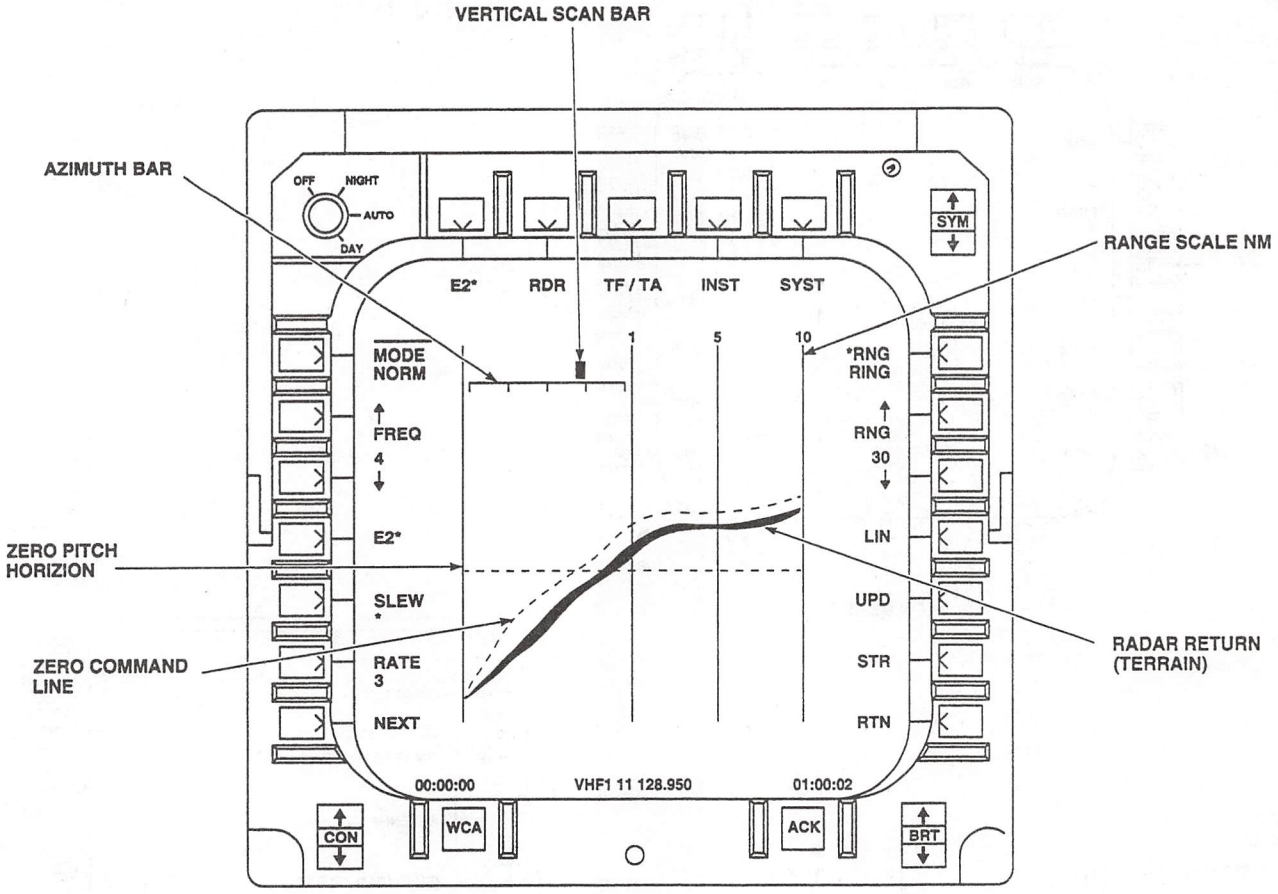

Figure 4-14. E2 Symbology Page

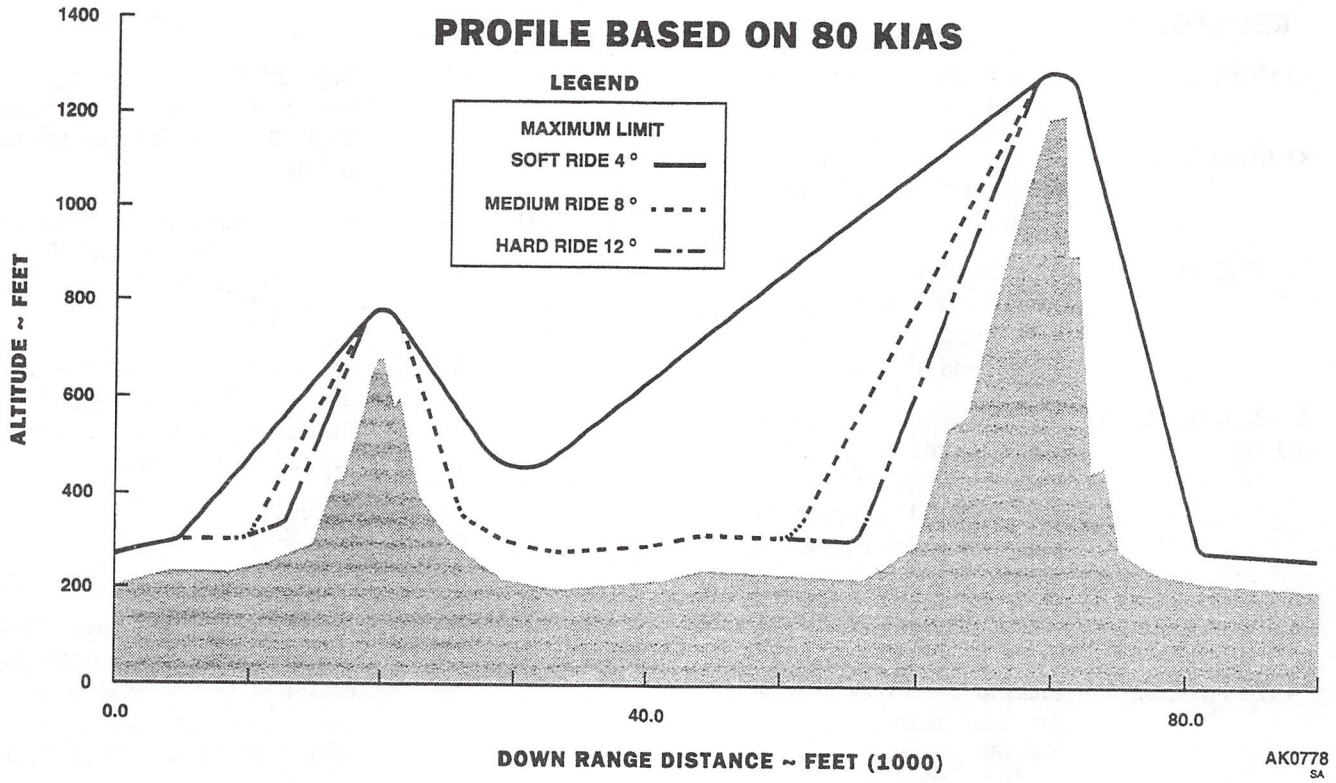

Figure 4-15. Typical Ride Profiles

KEY/LEGEND	FUNCTION
	MFD Page 1
L1 (NORM, WTHR, ECCM, or ECCM/WP)	Press L1 key to select desired option. Selections available: NORM, WTHR, ECCM, or ECCM/WP. (NORM - Provides maximum TF performance under normal conditions. WTHR - Provides best returns under rainy conditions. ECCM - Provides increased electronic countermeasures (ECM) resistance, not available in PMGT. ECCM/WP - Provides increased electronic countermeasures resistance under rainy conditions.)
L4 (FREQ1)	Press to change frequency range value to a smaller number. This selection should be used to obtain the best MFD image of the MMR video.
L3 (1, 2, 3, 4, 5, 6, 7, 8, and AUTO)	Press to change frequency range value to a larger number. AUTO will be displayed in PMGT submode and ECCM option, and in conjunction with the JAMMER WARNING annunciator. Selections available: 1 thru 8, and AUTO.
L4 (E2)	Press to activate or deactivate E2 symbology. E2 will be displayed under T1 key when active along with an asterisk adjacent to L4 (E2) key.
L5 (SLEW)	Press to enable track handle thumb tracker switch to move that MFD's target cursor and/or move the MMR antenna to the MFD's target cursor.
L6 (RATE 1, 2, 3, or 4)	Press to change the slew rate of target cursor (1 fastest rate).

KEY/LEGEND	FUNCTION
L7 (NEXT)	Press to display page 2 of the radar control pages.
R1 (RNG RING)	Press to activate or deactivate the range rings for display on the radar image.
R2 (RNG 1)	Press to toggle to a smaller range value for the radar MFD display area. Selections available: 3, 5, 10, 15, 30, and 45 miles.
R3 (3, 5, 10, 15, 30, and 45)	Press to toggle to a larger range value for the radar MFD display area. Selection available: 3, 5, 10, 15, 30, and 45 miles. Some radar modes have short ranges: TA and TF/TA have a maximum range of 15 miles, and E2 has a maximum range of 10 miles.
R4 (LIN or CIR)	Press to select type of polarization for radar returns (LIN for normal operations and CIR for adverse weather conditions).
R5 (UPD)	Press to access the update control pages.
R6 (STR)	Press to access the store control pages.
R7 (RTN)	Press to return to the current HSD, VSD, or HVR primary symbology page.
	CDU Page 1
L1 (GM ATTEN)	Press to enter the ground map attenuation value from the entrypad for use with the MMR. Entrypad data range: 1 to 16.
L2 (GM THRESHOLD)	Press to enter the ground map threshold value from the entrypad for use with the MMR. Entrypad data range: 1 to 32.
L3 (ANTENNA TILT)	Press to enter the radar antenna tilt value from the entrypad for use with the MMR. Entrypad data range: –20.0° to +20.0°.
L4 (Entrypad/Alert)	Standard CDU default pages line key entries. Refer to paragraph 3-45, CDU Default Pages, for more details.
R1 (GAIN)	Press to enter the receiver gain value from the entrypad for use with the MMR. Entrypad data range: 1 to 8.
R4 (SYMBOL LEVEL)	Press to enter the symbol intensity level value from the entrypad to set the intensity of radar image. Entrypad data range: 1 to 10
R2 thru R3	Not used.
	MFD Page 2
L3 (RIDE HARD, MED, or SOFT)	Press to select the command plane cue response for the aircraft's climb capability for the present weight and performance conditions (RIDE HARD, MED, or SOFT). HARD provides command plane cues based on a 12-degree maximum climb angle. MED provides command plane cues based on a 8-degree maximum climb angle. SOFT provides command plane cues based on a 4-degree climb angle. These selections affect how soon the command plane cue will move to ensure obstacle clearance in altitude. Figure 4-15 shows an example of the aircraft flight path to avoid an obstacle under the different ride conditions.
L4 (RDR ON)	Press to select between ON, STBY, and EMC for the MMR operational condition.
L5 (SLEW)	Same as L5 on page 1.
L6 (RATE 1, 2, 3, or 4)	Same as L6 on page 1.
L7 (NEXT)	Press to display page 1 of the radar control pages.

KEY/LEGEND	FUNCTION
R4 (GREY)	Press to turn grayscale on/off. Image can be used to adjust brightness and gain levels for the best image when manual gain control is selected.
R7 (RTN)	Press to return to the current HSD, VSD, or HVR primary symbology page.
L1, L2, R1, R2, R3, R5, and R6	Not used.
	CDU Page 2
L1 thru L4 and R1 thru R4	Same as CDU page 1.

4-51. MMR Normal Operation.

WARNING

Ensure all personnel are clear of the radiation danger zone when the MMR is operating (Figure 4-16).

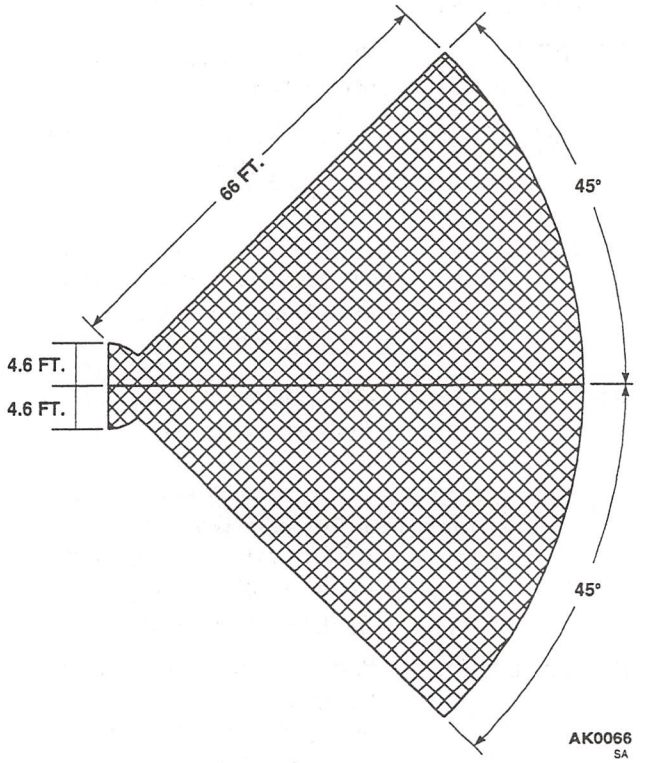

Figure 4-16. MMR Radiation Danger Zone

NOTE

If the MMR is not turned off before the helicopter is powered off, when power is restored, the MMR will automatically power on upon takeoff or weight-off-wheels.

1. Power on the MMR system using the procedures outlined under the equipment status pages in Chapter 3, as required.
2. Press T1 key to select HSD, VSD, or HVR symbology.
3. Press T2 key on MFD until RDR is displayed.
4. If STBY is displayed under T3 key, ensure power is turned on via the equipment status pages. Access the radar control page via R4 (RDR CTRL) key on the RDR HSD, VSD, or HVR primary page, press L7 (NEXT) key to display page 2 of the radar control pages. Press L4 (RDR, STBY, or EMC) key to display RDR ON, then press R7 (RTN) key to return. MMR parameters are unchangeable when T3 displays STBY.
5. Press T3 (GM, TA, TF/TA, TF/GM, MTR, or PMGT) key on MFD to select desired mode.
6. Place track handle IDS switch to center (compute) or right (TFU movement) position.
7. Press L1 (DCLT 1, 2, or 3) key to select desired declutter mode.

NOTE

When VSD is selected; display orientation, centered or decentered mode, and present position is not available. These selections are replaced with terrain following and clearance altitude.

8. Press L2 (NUP, TRK UP, or HDG UP) key to select desired orientation option for the HSD RDR display. This selection determines the direction represented by the top of the MFD display (NUP - North, TRK UP - Course selected, or HDG UP - aircraft heading).

9. If HSD symbology is selected, press L3 (CTR or DCTR) key to select desired HSD display. (CTR - aircraft present position symbol is located in the center of the display; DCTR - aircraft present position symbol is located at lower half of the display.)

10. Press L3 (TF) key to activate or arm terrain following mode as required.

11. Press L4 (CALT 100, 150, 200, 300, or 500) key to select desired radar clearance level altitude.

12. Press R1 (VID) key to turn on MMR video.

13. Press R4 (RDR CTRL) key to display radar control page 1.

14. Press L1 (NORM, STBY, or EMC) key for required operational condition of the MMR.

15. Press L5 (SLEW) key to activate track handle controls to move FLIR image target cursor and/or TFU.

16. Press L6 (RATE) key to select target cursor movement rate.

17. Press R2 or R3 (RNG) key to select desired display range on HSD symbology.

18. Press L2, L3, R1, R2, R3, and R4 as required.

19. Enter CDU values for GM ATTEN, GM THRESHOLD, and ANTENNA TILT that provide the best radar image.

20. Using grayscale image to adjust for best GM ATTEN and THRESHOLD settings:

    a. Press MFD L7 (NEXT) key to display page 2 of the radar control pages.

    b. Press MFD R4 (GREY) key to display grayscale pattern.

    c. Perform steps 18. and 19. until desired image is obtained.

21. To display E2 symbology, press L4 (E2) key on MFD radar control page 1 (Figure 4-14). E2 should appear under T1 key. Pressing L4 key while E2 symbology is being displayed will return display to the previous display symbology.

4-52. Storing Coordinates Using the MMR.

The radar store pages allow the pilots to mark a radar image location as an NRP. A radar image location can be marked and stored using the data received for the radar image. Access to the radar store pages is provided by R6 (STR) on the RDR HSD, VSD, or HVR primary page and radar control page (Figures 3-21 and 4-13). The store procedure is described under Chapter 3, Navigation Section, Multi-Mode Radar Store.

4-53. Updating Present Position Coordinates With the MMR.

The radar update pages allow the pilots to update aircraft position information based on radar images. Radar image must have a known NRP and barometric altitude and pressure data to update aircraft position data. The system uses the bearing and range data provided by the radar and accepted by the pilot to determine present position coordinates. Access to the radar update pages are provided by R5 (UPD) on the RDR HSD, VSD, or HVR primary page and the radar control page (Figures 3-21 and 4-13). The update procedure is described under Chapter 3, Navigation Section, Multi-Mode Radar Update.

4-54. Map Display Generator.

The map display generator (MDG) displays a map image or pictorial representation of a surface area. The system interfaces with the track handle control, mission processor, display processor, and data transfer module via the 1553B data bus. The map display generator is located on the right avionics rack in the cabin compartment (Figures 3-7 and

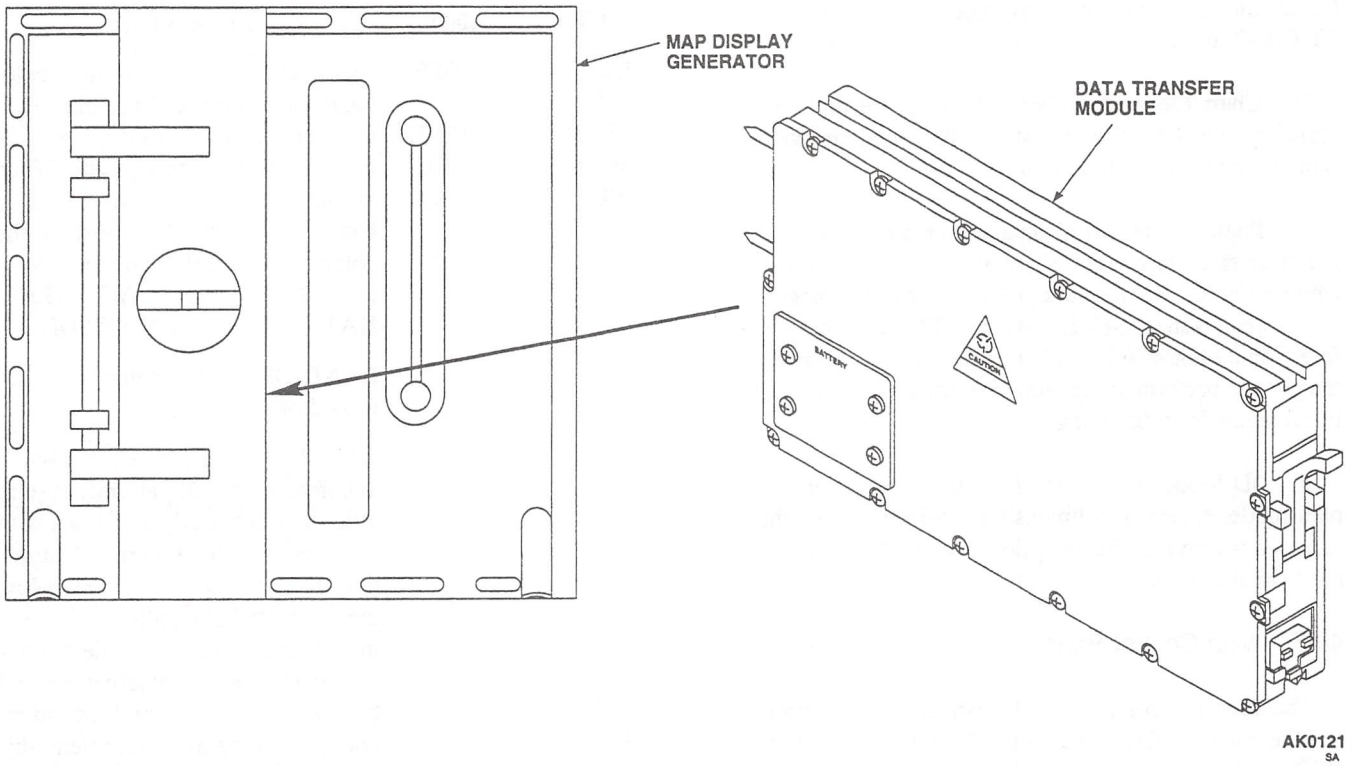

Figure 4-17. DTM Interface

4-17). Map images and/or photographic representations of the earth surface are contained on data transfer modules (DTM). The DTM data must be loaded into the map display generator before map images can be displayed on the MFDs. Once loaded, the pilot should perform a map update before using the data as a positioning reference source for the IASS. Map displays can be presented on HSD, VSD, or HVR symbology and are selectable between four modes: PLAN, CHART, PHOTO, and 3D. T1 key will toggle between HSD, VSD, and HVR, T2 key establishes the map video mode of operation (selectable between FLIR, MAP, and RDR), and T3 key toggles between the four map modes: PLAN, CHART, PHOTO, and 3D. Depending on the size of the database image, some of the image may not appear within the current MFD display. The track handle controls allow slewing to an area not within the current display. The range scale can be changed when the present range and size do not show sufficient details. The system is capable of displaying a UTM or LAT/LONG image, which is determined by the image database stored on the DTM. When selected for display, as defined by the declutter configuration pages, flight director data is superimposed on the map image. MFD and CDU pages associated with the map system are identified on the map system flow diagram (Figure 4-18). The track handle is used to move the map image and/or target cursor. When power is applied, a CBIT check is performed on the map display generator. In addition to the CBIT, an IBIT can be performed by the pilot. However, IBIT checks should be performed while on the ground. Power to the map display generator is provided by the No.1 ac primary bus through a circuit breaker marked MDG on the copilot auxiliary circuit breaker panel.

a. Plan Mode. Digital Terrain Elevation Data (DTED) and Digital Feature Analysis Data (DFAD) are combined with a terrain map to create a realistic view of the terrain. Landmarks, roads, rivers, hills, railroads, contour lines, and any other normal map features are displayed on a plan view. Colors are added to highlight different map features and elevations. This mode provide threats and masking plots which identify intervisibility areas. Map intervisibility, both point-to-point and masking plots, shows unobstructed line of sight between two points. Point-to-point intervisibility shows a line from an initial point/point-of-origin (location of target cursor when PT CRSR is selected) to the target cursor and/or aircraft location to the target cursor where there is intervening terrain. Masking plots show areas visible to an enemy observer or radar based on the threat NRP and aircraft's present altitude. Areas that are not masked by intervening terrain at the current aircraft barometric altitude and threat radius are colored in red. Point-to-point intervisibility operates in conjunction with the PT CRSR and A/C

CRSR function keys. Masking plots are deactivated when PT CRSR and A/C CRSR functions are activated.

b. Chart Mode. Aeronautical charts are digitized and scaled for display using the MDG. This mode provides the same features as the plan mode.

c. Photo Mode. MDG database created from a photograph or satellite image. These images may be black and white or color. Some photograph or satellite images may not be scaled to a LAT/LONG or UTM reference. Therefore, some photographs and satellite images will not allow the pilot to perform an update, store, or get present position information from the image.

d. 3D Mode. This mode has all of the features of the plan mode, except a 3-dimensional perspective of the image area is provided for the pilot's view. Masking plots are not available in this mode.

4-55. Map Control Pages.

The map control pages establish operating parameters for the map display generator. T3 selection on the map HSD or VSD primary page will determine which page 1 of the MFD map control pages is displayed. Upon display of the MFD map control page, the corresponding CDU map control page will appear (Figure 4-19). After selecting VSD or HSD symbology, additional parameters can be selected with the controls provided on these pages.

KEY/LEGEND	FUNCTION
	MFD Page 1
L1 (CONT 12.5, 25, 100, 200, 400 or OFF) (PLAN mode only)	Press L1 key to select desired contour line spacing. Selections available: 12.5, 25, 100, 200, 400, or OFF.

NOTE

If PT CRSR and A/C CRSR are being used, contour interval (L1 (CONT)) should be set at 12.5 and band interval (L2 (BAND)) should be set at SUN SHADE to clearly depict all of the terrain in the vicinity of a threat. SUN SHADE or ELEV should be selected whenever MASK PLOT, PT CRSR, and/or A/C CRSR functions are active to improve the display of intervisibility lines.

KEY/LEGEND	FUNCTION
L2 (BAND OFF, A/C, TERR, ELEV, HAT, or SUN SHADE) (PLAN mode only)	Press L2 key to select desired color band and reference. Different elevations are shaded with different colors (red, yellow, and green). When terrain features extend within a band, it will be displayed in the color of that band. Selections available: BAND OFF, A/C, TERR, HAT, ELEV, or SUN SHADE. BAND OFF - Map color bands are turned off. A/C - The top of the yellow band is 100 feet below the aircraft system altitude. It moves up and down with the aircraft altitude. Terrain features that extend within 100 feet below the aircraft flight path will appear in red. The starting altitude boundary of the red band is determined by subtracting a 100 foot safety buffer from the aircraft system altitude. The height of the yellow band is determined by MFD L3 (BAND INTR) key selection. The yellow band altitude boundary extends downward from the red band. The green band extends downward from the yellow band. For example, if the aircraft system altitude is 1000 feet and the band interval selection is 200 feet, all terrain above 900 feet will be colored in red. All terrain between 700 and 900 feet will be colored in yellow. All terrain below 700 feet will be colored in green.

WARNING

Terrain banding is not dynamic and should be used as a reference only. It shall not be used for inflight navigation.

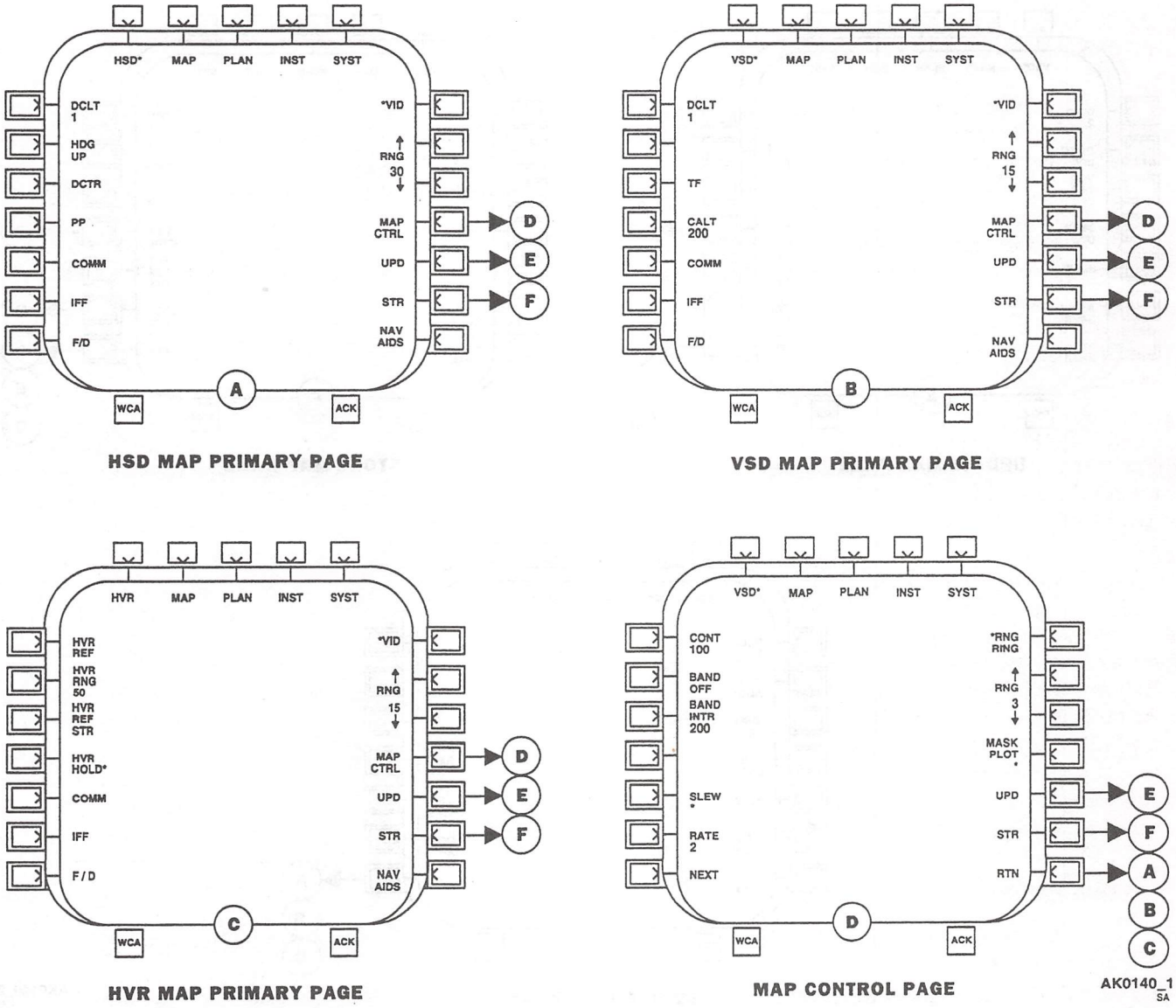

Figure 4-18. Map Display System Pages Flow Diagram (Sheet 1 of 2)

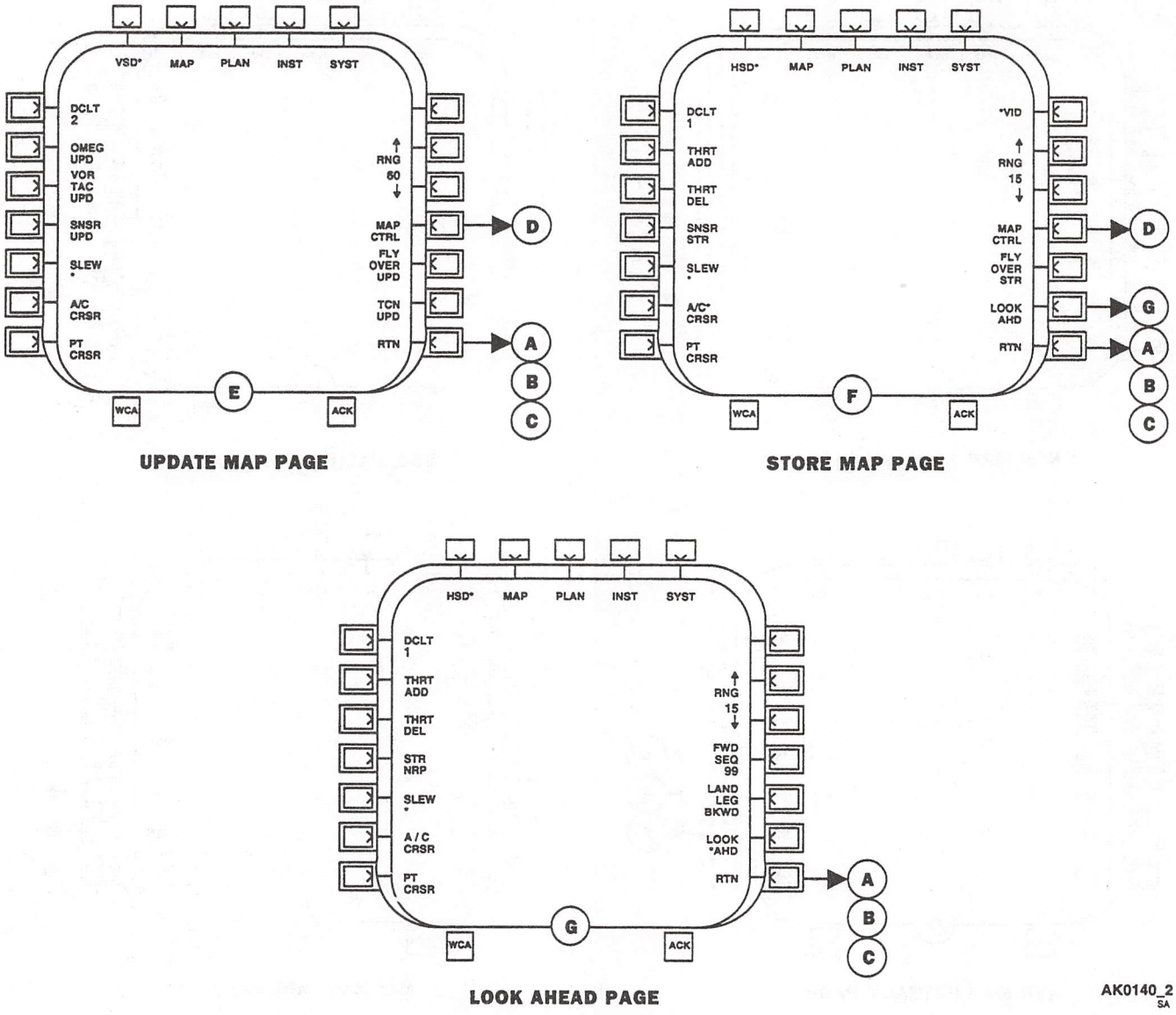

Figure 4-18. Map Display System Pages Flow Diagram (Sheet 2 of 2)

KEY/LEGEND	FUNCTION
	TERR - The center of the yellow band is determined by the value entered on the CDU for reference altitude (REF ALT). The width of the yellow band is the width of the band interval. The starting altitude boundary of the red band is determined by adding 1/2 of the band interval value to the reference altitude value. The top altitude boundary of the green band is determined by subtracting 1/2 of the band interval value from the reference altitude value. The height of the yellow band is determined by MFD L3 (BAND INTR) key selection. For example, if 2000 feet is entered for CDU L2 (REF ALT) and MFD L3 (BAND INTR) selection is 400 feet, all terrain above 2200 feet will be colored in red. All terrain between 1800 and 2200 feet will be colored in yellow. All terrain below 1800 feet will be colored in green. HAT - Only red and green are displayed in this mode. The red band extends downward from the aircraft present altitude. Any terrain feature extending within the red band will be display in red. The red band is determined by subtracting a 100 foot safety buffer and the band interval value from the aircraft system altitude. The red band extends upward from the sum of the aircraft system altitude minus the 100 foot safety buffer and minus the band interval selection. For example, if the aircraft system altitude is 1000 feet and the band interval is 200 feet, all terrain feature extending above 700 will be colored in red and all terrain below 700 feet will be colored in green. ELEV - Displays terrain height by changing the shading of the gray images. Lighter shades of gray represent higher terrain features and darker shades of gray represent lower terrain features,
	SUN SHADE- Shadows terrain features on the map image to reflect true sun shading. (Shades the appropriate side of a hill feature to simulate the sun shining from the opposite direction. Sun azimuth must be entered into the CDU.)
L3 (BAND INTR 100, 200, 400, 800, and 1600) (PLAN and 3D modes only)	Press L3 key to select desired yellow band height. Selections available: BAND INTR 100, 200, 400, 800, or 1600.
L5 (SLEW)	Press to enable track handle thumb tracker switch to move that MFD's target cursor and/or move the MMR antenna to the MFD' target cursor.
L6 (RATE 1, 2, 3, or 4)	Press to change the slew rate of target cursor (1 fastest rate).
L7 (NEXT)	Press to display page 2 of the map control pages.
R1 (RNG RING)	Press to activate or deactivate the range rings for display on the map image.
R2 (RNG) (PLAN and CHART mode only)	Press to toggle to a smaller range value for the map MFD display area. Selections available: 1, 3, 5, and 10 miles.
R2 (FOV 30, 60, 90, or 120) (3D mode only)	Press to select the viewing range of a 3D map image. Selections available: 30 , 60, 90, or 120.
R3 (1, 3, 5, 10, 15, 30, or 45) (PLAN and CHART mode only)	Press to toggle to a larger range value for the map MFD display area. Selections available: 1, 3, 5, 10, 15, 30, or 45 miles.
	NOTE Intervisibility information is only available on an HSD display with MASK PLOT active and the map in the PLAN mode.

KEY/LEGEND	FUNCTION
R4 (MASK PLOT) (PLAN only)	Press R4 (MASK PLOT) key to activate/deactivate mask plots on the map image. (Masking plots show visible and not visible line of sight between threat NRPs and aircraft present position.)
R5 (UPD)	Press to access the update control pages.
R6 (STR)	Press to access the store control pages.
R7 (RTN)	Press to return to the current HSD, VSD, or HVR primary symbology page.
	CDU Page 1
L1 (SUN AZ)	Press to enter the sun azimuth from the entrypad for use with the map image. Sun azimuth angle is entered relative to the nose of the aircraft. Sun azimuth angle is unrelated to the aircraft's magnetic/true heading.
L2 (REF ALT)	Press to enter the altitude value from the entrypad which will represent the aircraft's altitude. Entrypad data range: 0 to 40000 feet.
L4 (Entrypad/Alert)	Standard CDU default pages line key entries. Refer to paragraph 3-45, CDU Default Pages, for more details.
R3 (MAP LEVEL)	Press to enter the video intensity level value from the entrypad to set the intensity of map video. Entrypad data range: 1 to 10
R4 (SYMBOL LEVEL)	Press to enter the symbol intensity level value from the entrypad to set the intensity of map image. Entrypad data range: 1 to 10
L3, R1 and R2	Not used.

KEY/LEGEND	FUNCTION
	MFD Page 2
L1 (CULT OFF, HI, or LOW) (PLAN only)	Press to select high or low for display of map cultural features or to turn map cultural features off. Cultural features are towers, building, dams, and other landmarks that are normally man made.
L2 (LIN OFF, HI, or LOW) (PLAN only)	Press to select high or low intensity for display of map linear features or to turn map linear features off. Linear features are roads, railroads, rivers, and any other linear type map feature.
L3 (AREA) (PLAN and 3D modes only)	Press to activate or deactivate the map area features. Area features are large vegetation areas, large bodies of water, large open land areas, and other large uniform areas.
L5 (SLEW)	Same as L5 on page 1.
L6 (RATE 1, 2, 3, or 4)	Same as L6 on page 1.
L7 (NEXT)	Press to display page 1 of the map control pages.
R2 (PIC SEL 1, 2, 3, or 4) (PHOTO mode only)	Press to select one of four possible photo images previously stored in the map display generator.
R6 (STR)	Press to access the store control pages.
R7 (RTN)	Press to return to the current HSD, VSD, or HVR primary symbology page.
L4, R1, R3, R4, and R5	Not used.

KEY/LEGEND	FUNCTION
	CDU Page 2
L1 thru L4 and R1 thru R4	Standard CDU default pages line key entries. Refer to paragraph 3-45, CDU Default Pages, for more details.

4-56. MDG Look Ahead Page.

NOTE

If the map is in the normal mode and lookahead is selected, the target cursor is repositioned at the center of the screen on top of the lookahead NRP. It will display range and bearing when moved from the NRP location. If the map is in the lookahead mode and lookahead is deselected, the target cursor will either go to the update NRP or to the aircraft position. (NOTE: upon pressing the SLEW key, the target cursor will alternate between the update NRP and the aircraft position.

The look ahead page allows the pilots to display an NRP location that is not within the present map display (Figure 4-20). The NRP can be a friendly location, threat location, point on a flight plan leg, or coordinates selected by the pilots. The selected NRP location must be within the map image database. Once selected, the map area of the look ahead NRP will be displayed. When the look ahead page is displayed, depending on the reference mode in use (LAT/LONG or UTM), the CDU will display the corresponding LAT/LONG or UTM look ahead page automatically. The look ahead page is accessible from the PLAN and CHART map store page only, refer to Figures 3-76, 4-19, and 4-20 for key selections.

KEY/LEGEND	FUNCTION
	MFD Page
L1 (DCLT 1, 2, or 3)	Press to select the desired declutter level.
L2 (THRT ADD) (map PLAN or CHART mode only)	Press if the store NRP number in the CDU is a threat location and should be added to the map database.
L3 (THRT DEL) (map PLAN or CHART mode only)	Press to remove the NRP identified by the CDU from the map database.
L4 (STR NRP)	Press to initiate a store of an NRP position in the NRP table.
L5 (SLEW)	Press to enable track handle thumb switch to move that MFD's target cursor and/or move the FLIR/MMR antenna to the MFD's target cursor, or center the Map display on the MFD's target cursor.

NOTE

When both A/C CRSR and PT CRSR functions are in use, the target cursor is actually 12.5 feet higher than the terrain over which it is displayed. Twelve and one half is the less significant bit value associated with the target cursor altitude. The A/C CRSR function uses barometric altitude at the aircraft's position and ground level at the target cursor. The PT CRSR function uses AGL altitude which defaults to current radar altitude for the initial point and ground level for the target cursor location. When the location of the target cursor/target is beyond the range displayed on the MFD, the target cursor will be display on the MFD; however in the PT CRSR only, the intervisibility line at the edge of the display and target cursor will not coincide. If the target cursor and intervisibility does not coincide, this is an indication to the pilot that the actual target location is beyond the MFD display; however, the intervisibility line is displayed along the correct bearing.

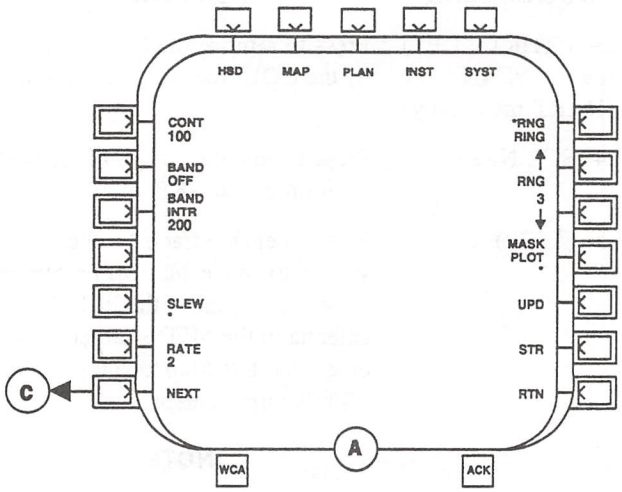

PAGE 1

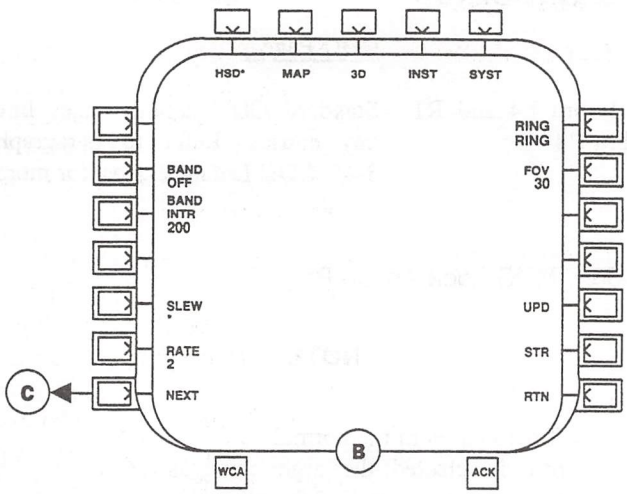

PAGE 1

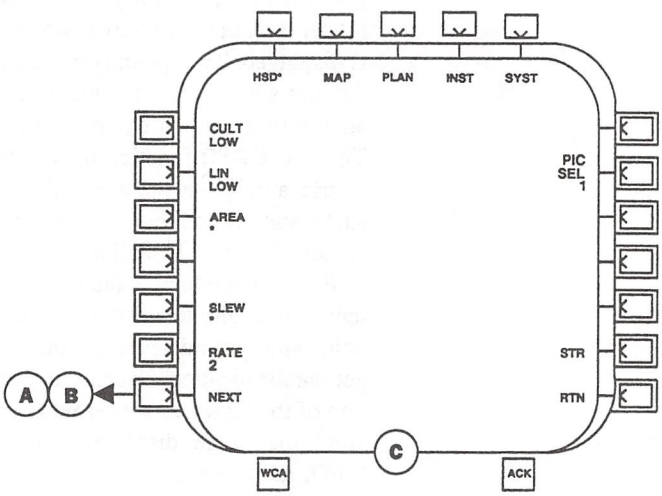

PAGE 2

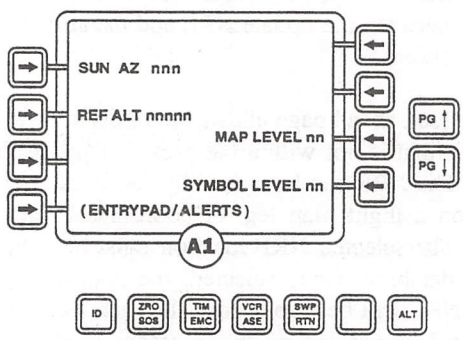

CDU FOR PAGE 1

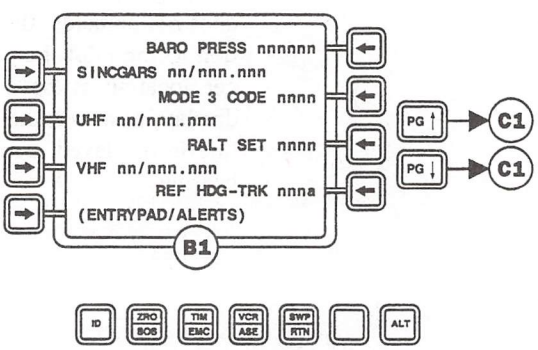

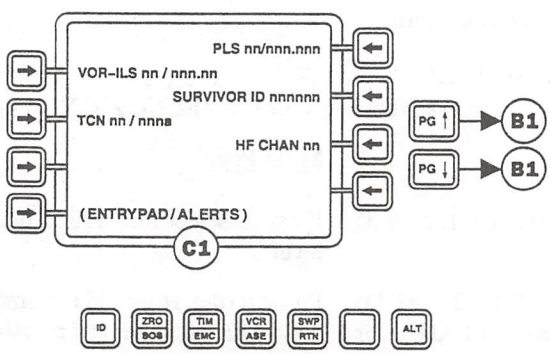

CDU SCREENS FOR PAGE 2

AK0134
SA

Figure 4-19. MFD and CDU Map Control Pages

KEY/LEGEND	FUNCTION
L6 (A/C CRSR)	Press to display the aircraft bearing and range to the target cursor. A line will be displayed between the aircraft and the target cursor. Bearing and range data will be displayed at the bottom of the MFD.
L7 (PT CRSR)	Press to display bearing and range from a point on the map image to the target cursor. Select initial point with target cursor by pressing L7 key to activate point-to-cursor (a P symbol will be displayed representing the initial point), when target cursor is moved and L7 is pressed again, a line will be displayed between the initial point and the target cursor. Bearing and range data will be displayed at the bottom of the MFD.
R2 (RNG)	Press to toggle to a smaller range value for the map display area. Selections available: 1, 3, 5, 10, 15, 30, and 45 miles.
R3 (1, 3, 5, 10, 15, 30, and 45)	Press to toggle to a larger range value for the map display area. Selections available: 1, 3, 5, 10, 15, 30, and 45 miles
R4 (FWD SEQ)	Press to increment the current leg number. Guidance will be provided from the aircraft present position to the destination NRP of the selected leg. Selected leg number is displayed next to L2 key and type of leg is displayed next to L3 key. (Leg type: hover, land, approach, cruise, stop, and terrain following.)
R5 (LEG BKWD)	Press to decrement the current leg number. Guidance will be provided from the aircraft present position to the destination NRP of the selected leg. Selected leg number is displayed next to L2 key and type of leg is displayed next to L3 key. (Leg type: hover, land, approach, cruise, stop, and terrain following.)
R6 (LOOK AHD)	Press to look at a section of the map area that is not within the current vicinity of the aircraft's location.

KEY/LEGEND	FUNCTION
R7 (RTN)	Press to return to the current HSD, VSD, or HVR primary symbology page.
	CDU Page 1 (LAT/LONG or UTM)
L1 (TAG)	Press to enter the three character identifier from the entrypad to be used with the NRP. Entrypad data range: maximum of 3 alphanumeric characters.
L2 (CMNT)	Press to enter a descriptive comment from the entrypad for the NRP. Data entry range: maximum of 16 alphanumeric characters.
L4 (Entrypad/Alerts)	Standard CDU default pages line key entries. Refer to paragraph 3-45, CDU Default Pages, for more details.
R1 (STORE NRP)	Press to enter the NRP number from the entrypad to be assigned to the NRP data being entered into the CDU. Data entry range: 1 to 100. (Enter a number from 96 through 100 if the NRP is expected to be moving. Moving parameters will have to be entered via the NRP table pages.
R2 (LEG)	Press to enter the flight plan leg number from the entrypad for look ahead access. Selection depends on number of legs in flight plan.
	NOTE
	When a CTR NRP is enter via the CDU, the FWD SEQ and LEG BKWD keys are not available on the corresponding MFD.
R3 (CTR NRP)	Press to enter the NRP number from the entrypad for look ahead access. NRP must be in the NRP table.
L3, and R4	Not used.

KEY/LEGEND	FUNCTION
	CDU Page 2 (LAT/LONG or UTM)
L1 key (LAT/LONG page)	Press to enter the LAT/LONG coordinates from the entrypad for use with the assigned NRP. Entrypad data range: Latitude - N or S, 00.00.00 to 90.00.00 (degrees.minutes.hundredths of a minute); Longitude - E or W, 000.00.00 to 180.00.00 (degrees.minutes.hundredths of a minute).
L1 key (UTM page)	Press to enter the UTM coordinates from the entrypad for use with the assigned NRP. Entrypad data range: Zone - 01A to 60Z; Square - AA to ZZ; Easting - 0000 to 9999 (tens of meters); and Northing - 0000 to 9999 (tens of meters).
L2 (PT CRSR ALT) (LAT/LONG page)	Press to enter the elevation from the entrypad for the NRP location. Entrypad data range: -2000 to 30000 (feet).
L2 (PT CRSR ALT) (UTM page)	Press to enter the elevation from the entrypad for the NRP location. Entrypad data range: -1524 to 9100 (meters).
L4 (Entrypad/Alerts)	Standard CDU default pages line key entries. Refer to paragraph 3-45, CDU Default Pages, for more details.
R1 (LATITUDE/ LONGITUDE) (LAT/LONG page)	Label for L1 key entry.
R1 (ZONE/SQR/ EAST NORTH) (UTM page)	Label for L1 key entry.
R3 (THRT TAG)	Press to enter the three character identifier from the entrypad to be use with the NRP. Entrypad data range: maximum of 3 alphanumeric characters.
R4 (THRT RAD) (LAT/LONG page)	Press to enter the threat/avoidance radius value from the entrypad. Data entry range: 0 to 99.9 (nautical miles).
R4 (THRT RAD) (UTM page)	Press to enter the threat/avoidance radius value from the entrypad. Data entry range: 0 to 185.0 (kilometers).
L3, and R2	Not used.

4-57. Map Display Generator Normal Operation.

NOTE

If the map display generator system is not turned off from the equipment status pages before the helicopter is powered off, when power is restored, the map display generator system will automatically power on, upon takeoff or weight-of-wheels.

1. Power on the map display generator using the procedures outlined under the equipment status pages in Chapter 3, as required.
2. To load DTM, insert DTM and perform the following:
   a. Press MFD T5 (SYST) key to display system control page.
   b. On the MFD system page, press R5 (MISSN LOAD) key twice. An asterisk (*) will appear next to MISSN LOAD adjacent to R5 key; at which time, the prepared mission data will begin to load. When loading is complete, the asterisk will disappear.
3. Press T1 key to select HSD, VSD, or HVR symbology.
4. Press T2 key on MFD until MAP is displayed.
5. Press T3 key on MFD to select desired mode (3D, PLAN, CHART, or PHOTO).
6. Press L1 (DCLT 1, 2, or 3) key to select desired declutter mode.
7. Press L2 (NUP, TRK UP, or HDG UP) key to select desired orientation option for the HSD. This selection determines the direction displayed at the top of the MFD (NUP - North, TRK UP - Course selected, or HDG UP - aircraft heading).

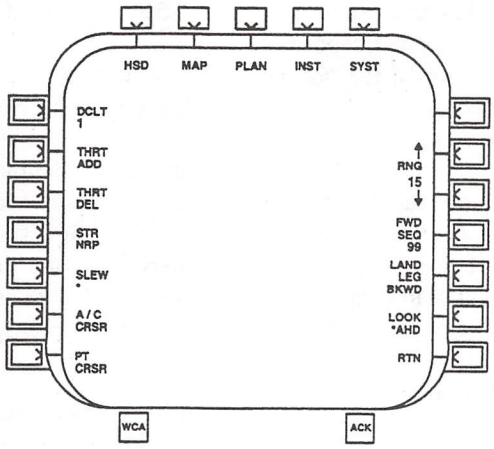

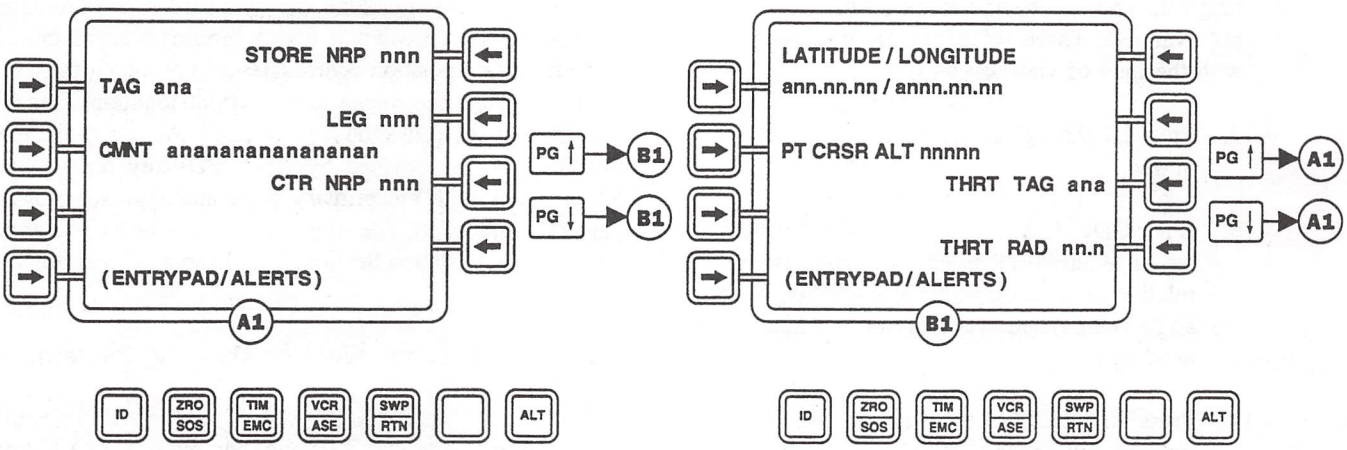

DISPLAYED WHEN SYSTEM REFERENCE IS LAT/LONG

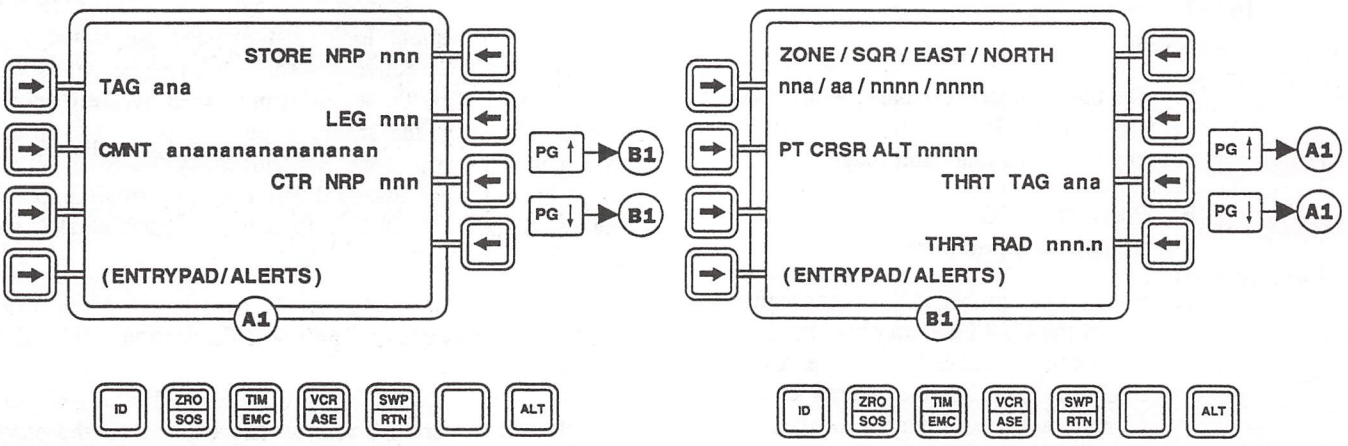

DISPLAYED WHEN SYSTEM REFERENCE IS UTM

AK0136
SA

Figure 4-20. MFD and CDU Look Ahead Pages

8. Press L3 (CTR or DCTR) key to select desired HSD display (CTR - aircraft present position symbol is located in the center of the display; DCTR - aircraft present position symbol is located at the bottom of the display).

9. Press R1 (VID) key to turn on map display generator video.

10. Place track handle IDS switch to center (compute) position.

11. Press R4 (MAP CTRL) key to access the map control page.

NOTE

When 3D mode is selected, range rings, range up and down, and mask plotting are not available. These selections are replaced with the field of view key.

12. Press L1 through L6 and R1 through R4 as required.

13. Enter CDU data for sun azimuth and band center as required. (Sun azimuth angle is entered relative to the nose of the aircraft. Sun azimuth angle is unrelated to the aircraft's magnetic/true heading.)

14. Press L7 (NEXT) key to access page 2 of the map control pages.

15. Press L1 through L6, R1, and R2 as required.

16. To access a look ahead page, perform the following:

    a. On the map control page with PLAN or CHART mode selected, press R6 (STR) key to access map store page.

    b. Press R6 (LOOK AHD) key to access the MFD look ahead page (Figure 4-20).

    c. Enter LEG number if the flight plan is active or the CTR NRP number into the CDU for the look ahead area to be displayed. NRP data regarding the entered leg or NRP number will be displayed adjacent to the other key selection automatically.

    d. Press MFD L6 (LOOK AHD) key to activate look ahead for the leg or NRP number.

4-58. Storing Coordinates Using the MDG.

The map store pages allow the pilots to store or delete a location as an NRP. Store NRPs of map locations can be tagged with radius information to identify a threat or avoidance area. The radius circle identifies the area that friendly aircraft should avoid. Access to the map store pages is provided by R6 (STR) on the map HSD, VSD, or HVR primary page and the map control pages (Figure 4-19). The store procedure is described under Chapter 3, Navigation Section, Map Display Generator Store.

4-59. Updating Present Position Coordinates With the MDG.

The map update pages allow the pilots to update aircraft position information based on the map display. Updates using known map locations are computed with barometric altitude and pressure data to update aircraft position data. If aircraft present position coordinates do not match the coordinates on the map image of its current location, then the aircraft position data should be updated. Access to the map update pages is provided by R5 (UPD) key on the map HSD, VSD, or HVR primary page and the map control pages (Figure 4-19). The store procedure is described under Chapter 3, Navigation Section, Map Display Generator Update.

4-60. Storm scope Weather Mapping System.

The storm scope, WX-1000, is a thunderstorm detection system. The system has a antenna mounted on the bottom of the tail section, a receiver with built-in diagnostic, and a display screen on the instrument panel. The antenna has a flat, loop, and sense section. The receiver and antenna sections are continuously monitored by the built-in-test feature for proper operation. Ionic disturbances associated with lightning and convective currents (turbulence, windshear, etc.) are sensed by the antenna, processed by the receiver, and displayed on the storm scope as a plus (+) symbol. Power to the storm scope is provided by the No.1 dc primary bus and 26v essential bus through circuit breakers marked STORM SCOPE on the copilot circuit breaker and copilot auxiliary circuit breaker panels.

4-61. Storm scope Controls, Functions, and Displays.

All of the operating controls are located on the storm scope display, which is installed in the instrument panel (Figure 4-21). S1, S2, S3, and S4 selections are dependent upon which screen is currently being displayed. There are nine different screen displays for the storm scope (self-test,

menu, 360 degree, 120 degree, time/date, options, error message, noise monitor, and test strikes). The following controls and functions are available for the storm scope:

CONTROL/ LEGEND	FUNCTION
OFF BRT Switch	Turns system on/off and adjusts screen instensity.
S1, S2, S3, and S4 Pushbuttons	Activates or deactivates the function identified by the legend name adjacent to the pushbutton.

4-62. Storm scope Normal Operation.

After the storm scope is turned on, a self test is automatically performed by internal diagnostics to verify system readiness. This test takes approximately 15 seconds. "SYSTEM TEST IN PROGRESS" should be displayed while test is being performed. Upon satisfactory completion of all tests, "ALL TESTS ARE OK" will be displayed for 3 seconds, then will be replaced by the main menu. If system is turned on cold, the test may be completed prior to filament warmup. In this case, the initial display will be the main menu.

a. Main menu. The main menu allows the pilots to select between the checklist, time/date, and options modes (Figure 4-21, Main Menu). The following controls and functions are available on the main menu:

CONTROL/ LEGEND	FUNCTION
OFF BRT Switch	Turns system on/off and adjusts screen instensity.
S1 (360°)	Selects 360-degree weather mapping mode.
S2 (NEXT)	Steps the highlight bar through the menu selections.
S3 (120°)	Selects 120-degree weather mapping mode.
S4 (GO)	Selects the mode indicated by the highlighted menu selection.

b. Three hundred sixty degrees weather mapping mode. When the 360° weather mode is initially displayed, it will always be in the 200 nautical miles range (Figure 4-21, 360 Degree Presentation). At least two ranges are always labeled for reference. The 25 nautical miles range is always indicated by a solid ring. Storm data is heading-stabilized and may be displayed at the top of the screen. The following controls and functions are available for 360° weather mapping mode:

CONTROL/ LEGEND	FUNCTION
OFF BRT Switch	Turns system on/off and adjusts screen instensity.
S1 (MENU)	Displays the main menu.
S2 (CLEAR)	Clears strike memory and storm information from the screen.
S3 (120°)	Selects 120-degree weather mapping mode.
S4 (NM)	Starts at current nautical mile range, allows pilot to toggle through the range scales.

c. One hundred twenty degrees weather mapping mode. The system shows weather in the 120° forward sector only (Figure 4-21, 120 Degree Presentation). When the 120° weather mode is initially displayed, it will always be in the 200 nautical miles range. At least two ranges are always labeled for reference. The 25 nautical miles range is always indicated by a solid ring. Storm data is heading-stabilized and may be displayed at the top of the screen. The following controls and functions are available for 120° weather mapping mode:

CONTROL/ LEGEND	FUNCTION
OFF BRT Switch	Turns system on/off and adjusts screen instensity.
S1 (MENU)	Displays the main menu.
S2 (CLEAR)	Clears strike memory and storm information from the screen.
S3 (360°)	Selects 360-degree weather mapping mode.
S4 (NM)	Starts at current nautical mile range, allows pilot to steps down through the range scales.

NOTE

Date must be set before setting the time.

d. Time and date. The time and date function allow the pilots to set the current time and date, and use the stopwatch and elapsed time features of the storm scope (Figure 4-21, Time/Date Presentation). Time and date are

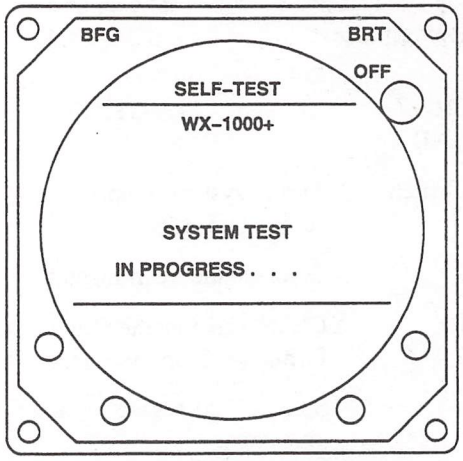

SELF-TEST PRESENTATION

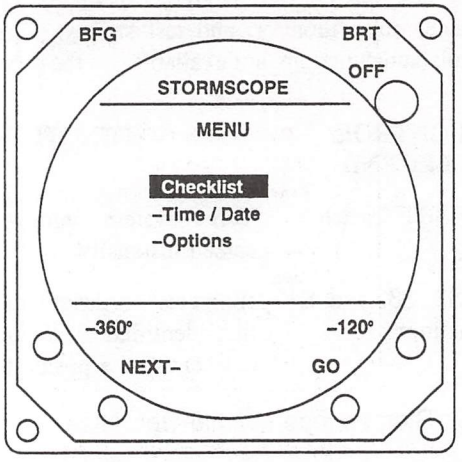

MENU

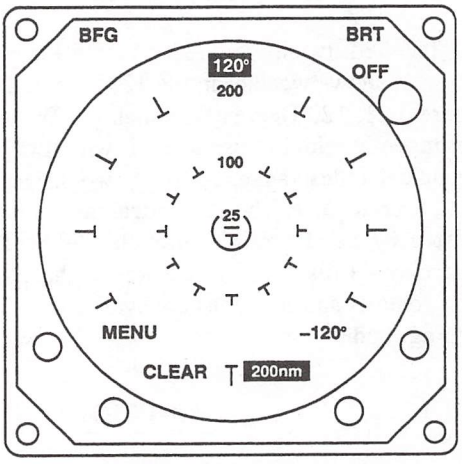

360 DEGREE PRESENTATION

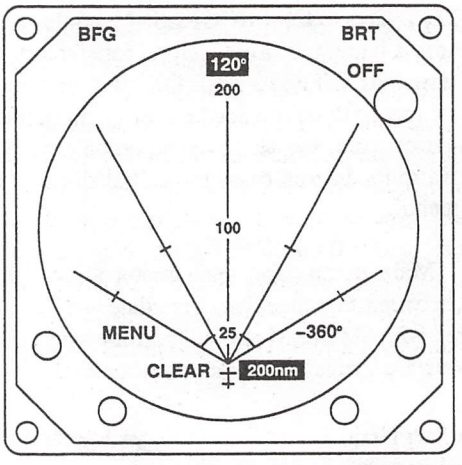

120 DEGREE PRESENTATION

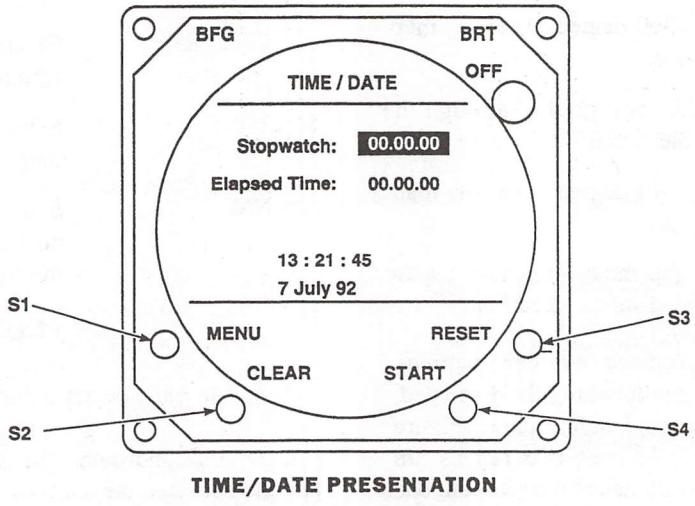

TIME/DATE PRESENTATION

AK3051_1
SA

Figure 4-21. Storm scope Displays (Sheet 1 of 2)

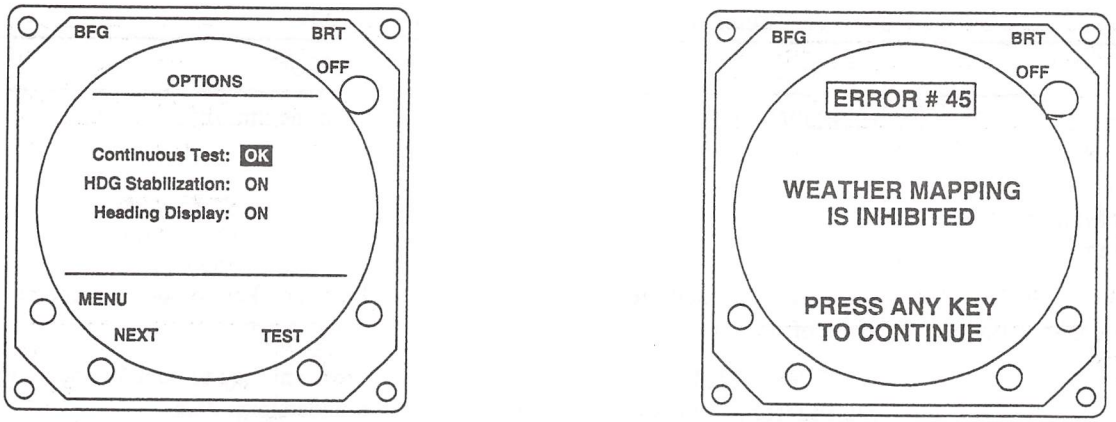

OPTIONS PRESENTATION

ERROR MESSAGE

AK3051_2 SA

Figure 4-21. Storm scope Displays (Sheet 2 of 2)

set by stepping the highlight bar through the date, month, year, hours, minutes, and seconds using the NEXT button. The UP and DOWN buttons are used to increment/ decrement the highlighted time/date numeral. The stopwatch and elapsed time features count hours, minutes, and seconds up to 99.59.59. Removing power will stop the elapsed time counter, but will not reset the elapsed time counter to 00.00.00. This feature of the elapsed timer allows the pilots to press START to continue the elapsed timer counting. The following controls and functions are available for the time and date mode:

CONTROL/ LEGEND	FUNCTION
OFF BRT Switch	Turns system on/off and adjusts screen instensity.
	Time/Date Mode
S1 (MENU)	Displays the main menu.
S2 (NEXT)	Steps the highlight bar through the stopwatch, elapsed time counter, and each portion of the time and date display.
	Stopwatch Mode
S1 (MENU)	Displays the main menu.
S2 (NEXT)	Selects other timing functions.
S3 (RESET)	Returns stopwatch digits to zeros.
S4 (START or STOP)	Starts or stops stopwatch time counting feature.
	Elapsed Timer Mode
S1 (MENU)	Displays the main menu.
S2 (NEXT)	Selects other timing functions.
S3 (RESET)	Returns elapse time digits to zeros.
S4 (START or STOP)	Starts or stops elapsed timer counting feature.
	Set Current Time/Date Mode
S1 (MENU)	Displays the main menu.
S2 (NEXT)	Highligts the digits to be changed.
S3 (UP)	Increments the highlighted number(s).
S4 (DOWN)	Decrement the highlighted number(s).

e. Options menu. Options menu displays the latest built-in-test result and allows the pilots to initiate a complete self test (Figure 4-21, Options Menu). (OK - No faults detected during continuous self test. FAULT - A fault is detected [Table 4-3].) The system will always power up with HDG Stabilization on. If the aircraft external heading source (gyro) fails, the HDG Stabilization feature should be turned off manually. Also, HDG Stabilization should be manually disabled if a compass failure occurs without causing a flag condition. When operating in the HDG Stabilization mode, the pilots may elect to have the Heading Display on or off in any weather mode. When Heading Display is

Table 4-3. Storm scope Error Messages

ERROR	MESSAGE	ACTION
Bus Error Video Error Data Error Program Memory Video Memory	HARDWARE ERROR Continued operation is not possible	Turn the unit off
Real-Time Clock Real-Time Clock Battery	HARDWARE ERROR Time of day function not available	Press any key to continue operation without clock function
Antenna	ANTENNA ERROR Storm information is not available	Press any key to continue operation without thunderstorm data
Analog Processing	HARDWARE ERROR Storm information is not available	Press any key to continue operation without thunderstorm data
Heading Processing	HARDWARE ERROR Heading stabilization and display not available	Press any key to continue operation without heading information
	NOTE Some radios pull the mike key line to airframe potential when turned off; therefore, inhibiting operation of the system	
Microphone Key Stuck	MIC KEY STUCK Strike processing is inhibited	Check mike key to correct problem. Verify all radios are on

on, the aircraft heading will appear as a digital readout at the top of the display. The following controls and functions are available on the options menu:

CONTROL/ LEGEND	FUNCTION
OFF BRT Switch	Turns system on/off and adjusts screen instensity.
S1 (MENU)	Displays the main menu.
S2 (NEXT)	Steps the highlight bar throught the menu selections.
S3 (Blank)	Not used for option mode.
S4 (TEST)	Initiates the built-in-test when highlight bar is over Continuous Test, and toggle between ON and OFF for HDG Stabilization and Heading Display selections.

Section II ARMAMENT

4-63. Armament Subsystems.

An armament subsystem M134 Minigun is pintle-mounted in each gunner's window at the forward end of the cabin section (Figure 4-22). Major components of the armament system consist of two M134 minigun assemblies, GUN SYSTEM CONTROL panel, two gun control units, two electrical control units, two electronic sight units, and two ammunition handling systems. The two M134 miniguns are free-pointing but limited in traverse, elevation, and depression when in the side firing position. Each M134 minigun is capable of firing at 2,000 or 4,000 rounds per minute. The GUN SYSTEM CONTROL panel and electrical control units are used with both systems; however, the gun control unit is part of the M134 minigun. Power to operate the armament system is provided by the No.2 dc primary bus and No.1 ac primary bus through circuit breakers marked L GUN and R GUN on the lower console circuit breaker panel.

4-64. M134 Miniguns.

The M134 minigun is air-cooled, electrically operated, and fire in the automatic mode. Each weapon may be fired in the fixed forward position by the pilots or in the side fire position by the gunners/crewmember. The M134 minigun uses standard 7.62 mm ammunition. Each weapon is pintle-mounted on a rotating arm assembly which allows it to be locked outboard in the firing positions, or inboard/inside the aircraft in the stowed position. Quick-release pins are used at the pivot attachments to facilitate rapid installation, removal, or repositioning of the weapon system. The mounting assemblies limit the weapons in elevation, depression, and azimuth to prevent damage to the helicopter when firing (Figure 4-23).

4-65. GUN SYSTEM CONTROL Panel.

The GUN SYSTEM CONTROL panel is the primary control which establishes the operating mode of the weapon system installed (Figure 4-22). There are two modes of operation, fixed forward and side firing, which are enabled by the GUN SYSTEM CONTROL panel. Fixed forward allows the pilots to fire the weapons from the cockpit and side firing allows the gunners/crewmembers to fire the weapons. The following controls are located on the GUN SYSTEM CONTROL panel:

CONTROL	FUNCTION
Mode Firing Switch	
FWD FIRE	Enables firing of the weapons by the pilots.
SIDE FIRE	Safety wired to this position, enables firing of the weapons by the gunners/crewmembers.
MASTER ARM Switch	Cover down inhibits weapons from firing. Raising the cover and placing the switch at the up position arms armament circuits to allow firing by the pilots or gunners/crewmembers.
Station Selector Switch	
LEFT SIDE	Enables the left side weapon for firing.
BOTH	Enable left and right weapons for firing.
RIGHT SIDE	Enable the right side weapon for firing.

4-66. Gun Control Unit.

The gun control units enable the gunners/crewmembers to fire the weapons in the side fire mode. A gun control unit is mounted on the aft end of each gun (Figure 4-22). The gun control units will fire the weapons when the GUN SYSTEM CONTROL panel mode switch is placed at the SIDE FIRE position or the emergency override switch on the electrical control unit is activated. The following controls and functions are available on the M134 minigun:

CONTROL	FUNCTION
HI RATE Trigger	Fires M134 minigun at 4,000 rounds per minute.
ARM Switch	Enable the weapon for firing when a trigger switch is depressed. Armed indicator will illuminate.

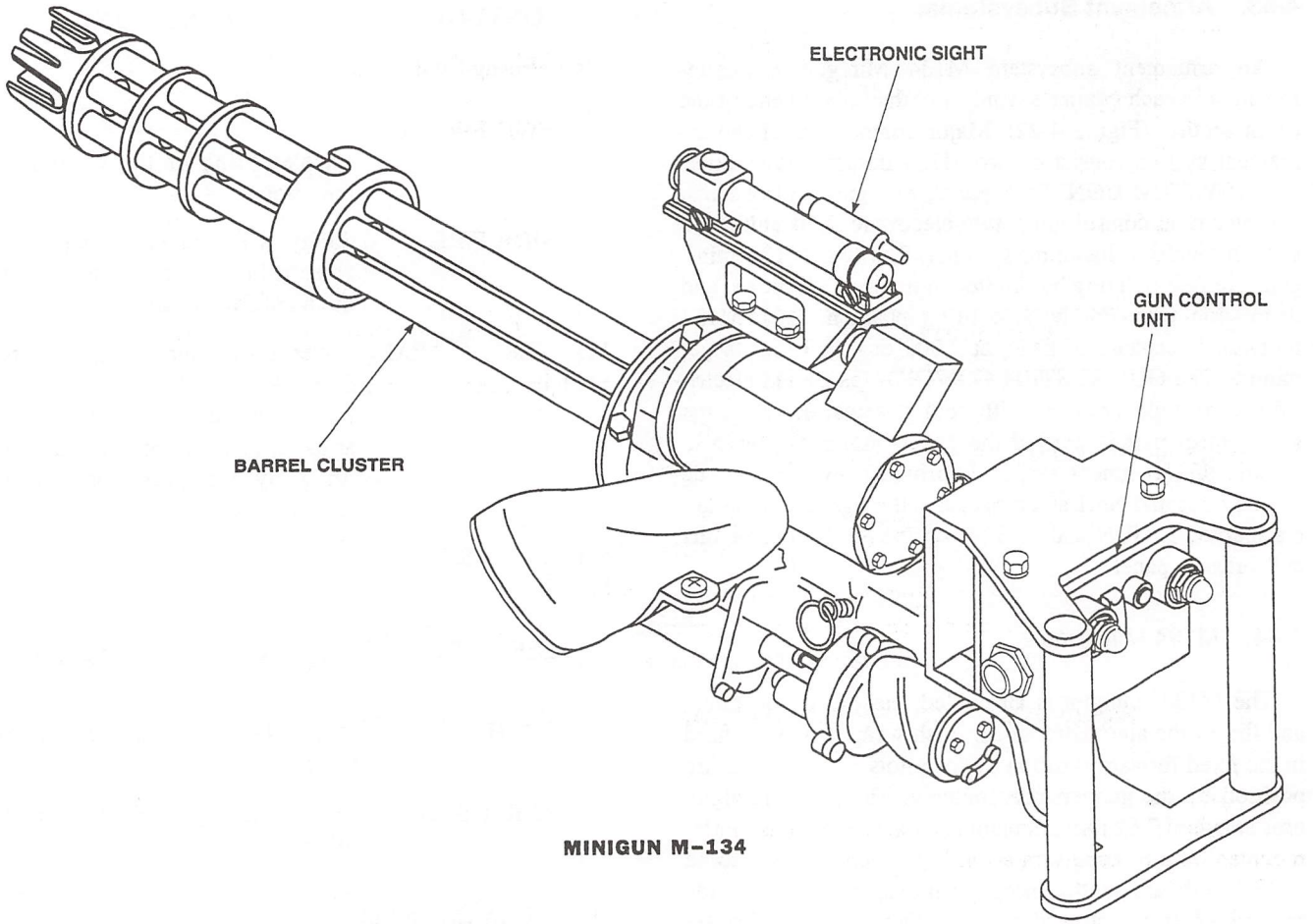

Figure 4-22. M134 Minigun and Armament Control Panels (Sheet 1 of 2)

CONTROL	FUNCTION
PRESS TO TEST Armed Light	Press, light should illuminate. Light illuminates when ARM switch is on.
LO RATE Trigger	Fires M134 minigun at 2,000 rounds per minute.
ICS switch	Provides intercommunication between the gunner and other crewmembers.

4-67. Electrical Control unit.

The electrical control unit (Figure 4-22) allows the gunners/crewmembers to override the GUN SYSTEM CONTROL panel for emergency firing of the weapons. The emergency override switch is safety wired to the off position. IF the GUN SYSTEM CONTROL panel is inoperative and/or during an emergency and the pilots are unable to reposition the mode switch to SIDE FIRE, the gunners/

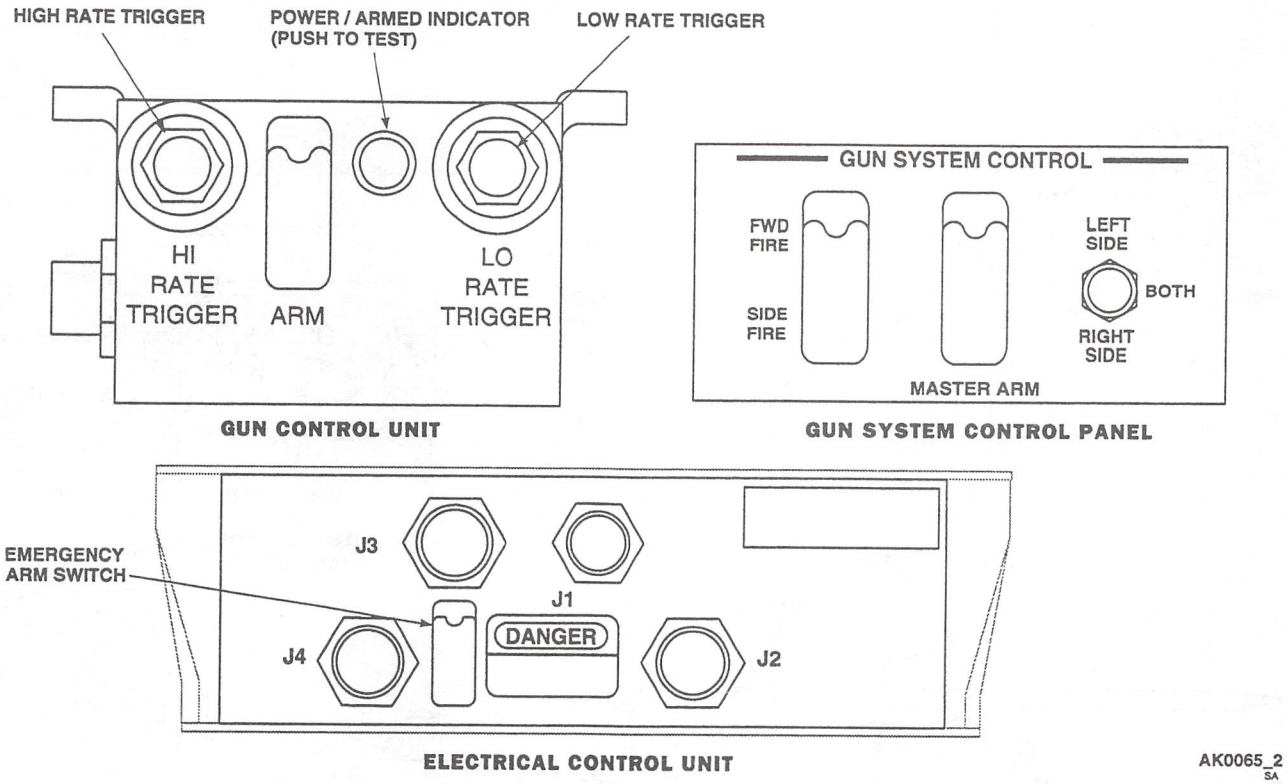

Figure 4-22. M134 Minigun and Armament Control Panels (Sheet 2 of 2)

crewmembers must break the safety wires and place the override switches in the up position. This will enable each gun control unit to fire its weapon.

4-68. Safety.

WARNING

Any time the weapon is to be cycled or fired, the barrels of the weapon shall be pointed toward a designated impact area.

When operation the AP 1000 laser sight, ensure personnel are clear of the beam path/ line of sight.

Keep barrels clear of the window frame and all personnel.

To clear a weapon, perform the following procedure:

1. Place GUN SYSTEM CONTROL panel mode switch at SIDE FIRE.
2. Place GUN SYSTEM CONTROL panel MASTER ARM switch at up position.
3. Place GUN SYSTEM CONTROL panel station selector switch as required.
4. Place gun control unit ARM switch in the off position. PRESS TO TEST armed light should be off.
5. Remove the slider lock pin from the shouldered pin in the center of the window frame and rotate the mount approximately 10° inboard toward the stowed position.
6. Depress the LO RATE trigger, the barrel cluster should NOT rotate, the clutch solenoid should NOT energize and the PRESS TO TEST armed light on the gun control unit should be off. Rotate the mount to the fixed forward position while depressing the trigger, weapon should not activate.

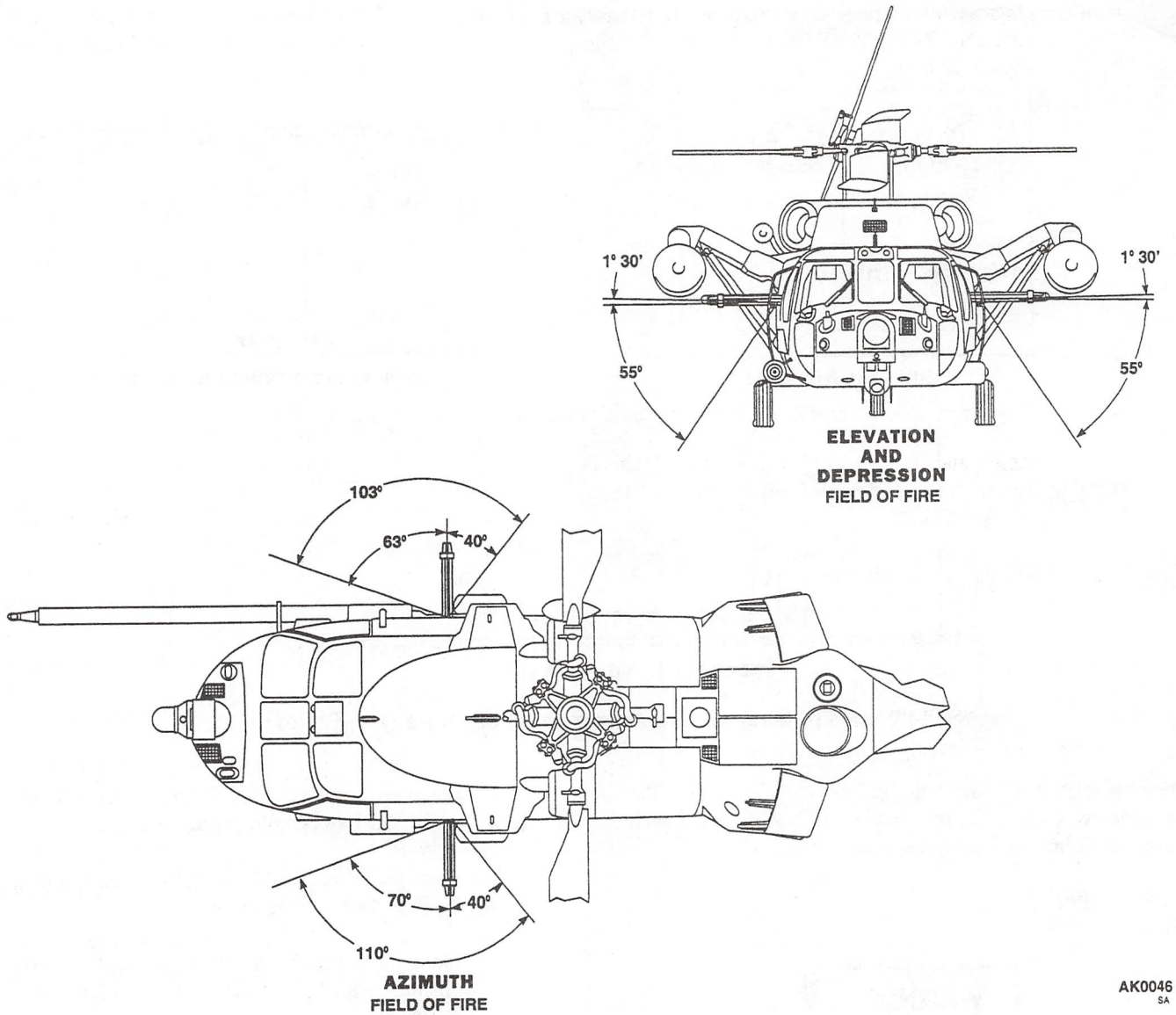

Figure 4-23. Field of Fire

7. Depress safety interlock switch with the slider lock pin. The PRESS TO TEST armed light should illuminate.

WARNING

The weapon system is considered safe only when the safing sector and housing cover have been removed and each barrel chamber has been checked, and there is no ammunition in the weapon.

8. While depressing the safety interlock switch with the slider lock pin, depress the LO RATE trigger and verify the PRESS TO TEST armed light is illuminated and the barrels rotate in a counterclockwise direction.

4-69. M134 Minigun Operation.

WARNING

Any time the weapon is to be cycled or fired, the barrels of the weapon shall be pointed toward a designated impact area.

When the barrel cluster is rotated counterclockwise, the weapon will fire any live ammunition that may be in the weapon.

CAUTION

Firing pin life will be reduced as a result of dry cycling the M134 minigun with the standard safing cover 65F9807; therefore, it is recommended that cover 66D10033 is use for dry firing.

After installing the weapons, each weapon and feed system must be checked for proper timing and securing hardware prior to firing. The ammunition must be loaded into the container as specified by the instructions for ammunition storage and feed unit. To operate the weapon, perform the follow checks as required:

1. Pre-firing Checks:

   a. Place gun mount in the side fire position.

   b. Ensure pivot pin nut is securely fastened and has no more than 0.030 inch of vertical movement.

   c. Safety interlock switch in the window sill should be depressed by locking the slider pin to the shoulder pin in the window frame when in the side fire position.

   d. Place last round switch in the on position.

   e. Gun subsystem as required:

      (1) Ammunition feeder timed.

      (2) Flash suppressor and muzzle clamp secured.

      (3) Aimpoint AP1000 sight and adjustment covers tight.

      (4) Drive motor gearbox secured to gun.

      (5) Drive motor secured to gearbox.

      (6) Hand grip assembly secured.

      (7) Clutch solenoid plunger free to move.

      (8) Gun control unit properly fastened.

      (9) Trigger switches fastened and secured.

      (10) Gun assembly free to move in azimuth and elevation throughout full range.

      (11) Electrical cables clear of gun barrels.

   f. Ac and dc power systems on and utility receptacle circuit breakers in.

   h. Place GUN SYSTEM CONTROL panel mode switch at SIDE FIRE.

   i. Place GUN SYSTEM CONTROL panel MASTER ARM switch at up position.

   j. Place GUN SYSTEM CONTROL panel station selector switch as required.

   k. Place gun control unit ARM switch to on.

   l. Depress LO RATE trigger, gun barrels rotate counterclockwise, clutch solenoid is

energized, and the ammunition booster is energized and rotating in the proper direction. When trigger is released, clutch solenoid and ammunition booster de-energize and barrels stop rotating.

m. Depress HI RATE trigger, gun barrels should rotate twice the speed of the LO RATE. Clutch solenoid is energized, and the ammunition booster is energized and rotating in the proper direction. When trigger is released, clutch solenoid and ammunition booster de-energize and barrels stop rotating.

2. M134 Minigun Operational Test.

a. Place GUN SYSTEM CONTROL panel MASTER ARM switch at down position.

b. PRESS TO TEST light on gun control unit off.

c. LO or HI RATE trigger switch press, there should be no action resulting from either trigger.

d. Place gun mounts in the fixed forward positions.

e. Place GUN SYSTEM CONTROL panel mode switch at FWD FIRE.

f. Place GUN SYSTEM CONTROL panel station selector switch as required.

g. Place GUN SYSTEM CONTROL panel MASTER ARM switch at up position.

h. Gun control unit ARM switch at up position.

i. PRESS TO TEST light on gun control unit illuminated.

j. Cockpit weapon firing switch pressed, verify weapons rotates counterclockwise, clutch solenoid energizes, and the ammunition booster is energized and rotating in the proper direction.

k. Cockpit weapon firing switch release, all actions should stop.

3. Boresighting.

NOTE

Flash suppressor must be removed for boresighting.

Left and right gun subsystems are interchangeable with left and right mounts and will maintain boresight for flexible pintle mode use.

a. Align the aimpoint AP 1000 sight with the gun barrel bore line to converge at 500 meters.

(1) Place pintle mount in the side fire mode.

(2) Remove flash suppressor assembly.

(3) Place barrel in the timed position and insert muzzle adapter into the timed barrel. Insert telescope 125C3921 into the muzzle adapter.

(4) Set up a target on a frame at a range of 1000 inches (83.3 feet, 27.8 yards, or 25.4 meters) so that the aimpoint AP 1000 sight dot is centered on the aiming point one inch to the right of the boresight aiming point in the center of the target (Figure 4-24). Use the tie rod to make this adjustment.

(5) Adjust aimpoint AP 1000 sight to place the reticle on the aiming point of the target. This adjustment is accomplished by removing the elevation and azimuth caps. Using a coin for a tool, turn the screws to move the reticle.

(6) If the adjustment required is so great that the reticle will be very far off center in the scope, loosen the screws that hold the sight bracket to the yoke assembly and move the bracket as required for azimuth. Tighten the screws, and repeat step (5) above. Replace and tighten the covers on the sight. The sight is now ready for firing.

(7) Replace and tighten the covers on the sight. The sight is now ready for firing.

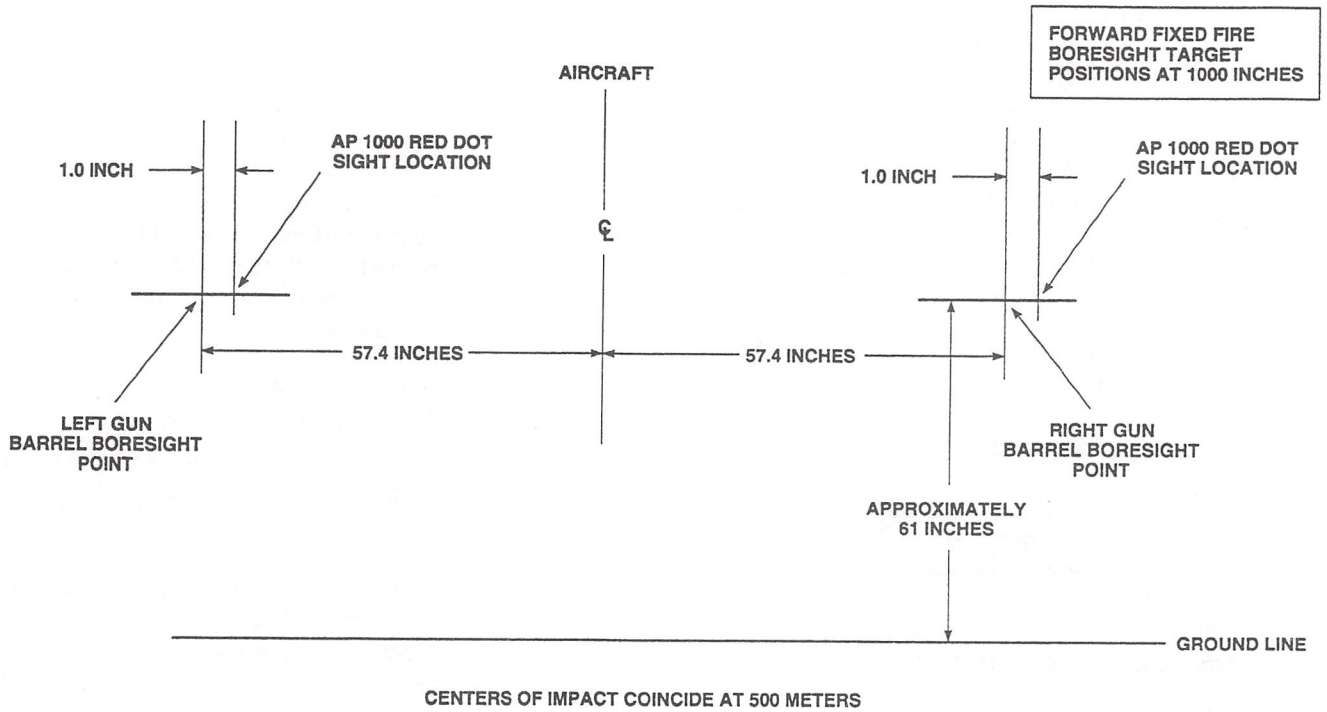

Figure 4-24. Boresighting Target

(8) Verify boresight by sighting on a target using the aimpoint AP 1000 sight and fire several short bursts. Observe the strike of the bullets and adjust the sight accordingly.

(9) The AP 1000 sight should repeat the boresight test without change or adjustment provided:

(a) The same weapon assembly is used on the same pintle mount in the same location on the same aircraft.

(b) The sight has not been adjusted, removed, or handled roughly.

b. Aligning the two pintle mounts in the fixed forward fire so as to converge at a range of 500 meters (approximately parallel to the longitudinal axis of the helicopter).

(1) Align aimpoint AP 1000 sight to the firing barrel bore line as specified in the preceding procedure.

(2) Level helicopter along the longitudinal and transverse axes using a bubble level. All personnel should be off the helicopter.

(3) Place weapons in the fixed forward position and place the strut arm (219F437) in position.

(4) Place boresight target holder 1000 inches in front of the helicopter so that the target is centered on the helicopter's longitudinal axis. The two targets shall be placed so the gun sight aiming points are level and 114.8 inches apart, centered on the helicopter's longitudinal axis.

(5) Insert muzzle adapter into the timed firing barrel, push up and to the right on the barrel clamp to remove any slack in the gun mount system, adjust the elevation and azimuth struts so that the firing barrel bore aim point falls at the center of the target. Lock the elevation and azimuth strut lock nuts and jam nuts.

(6) Repeat steps (1) through (5) of b. above with the second weapon on its target.

(7) To verify both weapons converge at 500 meters, set up a target at 500 meters and fire a burst of 50 rounds from both weapons simultaneously. Check target and make adjustments accordingly.

c. Replace flash suppressor upon completion of boresighting.

4. Loading Ammunition for Firing.

CAUTION

When loading weapon, always check for and remove any links in the feeder exit chute.

When loading SLAP ammunition into the feeder, place the base of the rounds against the rear face of the feeder and ensure links engage the feeder sprocket properly.

a. Two people are required to charge the weapon with ammunition. One person must depress the clutch lever, the other person must feed the ammunition belt into the feeder while rotating the barrel cluster manually until three or four rounds enter the feeder. When three or four rounds enter the feeder, release the clutch lever and rotate barrel cluster 2/3 turn. No more than one round should enter the feeder after releasing the clutch lever. The paddle wheel in the feeder should stop rotating, indicating the clutch has disengaged. After the paddle wheel stops, turn the barrel cluster two full turns. If the paddle wheel continues to rotate after releasing the clutch lever and rotating the barrel cluster 2/3 turn - STOP. Remove feeder, clear all ammunition from gun feeder and determine cause of clutch malfunction. To load the weapons, perform the following:

b. Ensure weapon is safe with safing sector removed and barrels pointed toward a designated impact area.

c. Verify weapon feeder is timed and properly installed.

d. Open ammunition container and thread ammunition through repositioner, booster, and up through feed chute. It may be necessary to open the chute cover to assist in advancing ammunition.

e. When ammunition is at the feeder entrance, be sure that the single end loop is first and is inserted into the feeder sprocket to engage properly. Do not force ammunition into the feeder.

f. With ammunition at the feeder entrance, depress the clutch actuation lever while rotating the barrels counterclockwise keeping slight forward pressure on the ammunition belt.

g. When the feeder engages the ammunition and starts pulling the belt, do not advance more than three or four rounds into the feeder.

h. Release clutch lever and rotate barrel cluster counterclockwise in order to disengage the feeder.

i. Secure chute cover, then latch container cover assembly. With last round switch connected and safing sector reinstalled, the weapon is ready to operate.

5. Firing:

a. Fixed forward fire mode.

(1) Place both weapons in the forward fire position and lock into place with safety interlock switches depressed.

(2) Pilot must break the safety wire on the GUN SYSTEM CONTROL panel mode switch, then place the mode switch at FWD FIRE.

(3) Place GUN SYSTEM CONTROL panel MASTER ARM switch at up position. The gun control unit PRESS TO TEST armed light does not illuminate in the fixed forward mode.

(4) Place GUN SYSTEM CONTROL panel station selector switch as required.

(5) Cyclic firing switch press to fire weapon(s).

b. Side firing mode.

(1) Place GUN SYSTEM CONTROL panel mode switch at SIDE FIRE.

(3) Place GUN SYSTEM CONTROL panel MASTER ARM switch at up position.

(4) Place GUN SYSTEM CONTROL panel station selector switch as required.

(5) The gunner must arm the weapon by placing the gun control unit ARM switch to the on position. The PRESS TO TEST armed light will illuminate.

WARNING

The weapon may not clear if the gun malfunctions or jams. Under these conditions, consider the weapon loaded and dangerous. Exercise safety precautions while clearing the weapon.

(6) The gunner fires the weapon by depressing the HI RATE (4,000 rpm) or LO RATE (2,000 rpm) trigger switch. Depressing both trigger switches simultaneously will result in firing at the HI RATE.

(7) Releasing the trigger(s) will cause the weapon to clear and stop rotating. There is a built-in clearing time delay in the firing circuitry that causes the clutch to disengage the gun from the feeder while the gun is powered for 400 milliseconds. This ensures that all rounds are cleared from the weapon at the end of a burst.

6. Placing Weapon in the Side Store Position:

a. Remove azimuth strut arm and secure.

b. Swing weapon to side fire position.

c. Engage sill switch.

4-70. Firing Malfunctions.

If a malfunction occurs and the barrel cluster rotates freely under power without firing, the gun is considered clear for servicing. Disconnect the gun drive motor power cable, then attempt to determine the cause of the malfunction and make corrective actions if possible. When a malfunction occurs, perform the following as appropriate:

WARNING

To prevent injury or possible death, weapons shall be cleared from the side fire positions only. Keep malfunctioning gun pointed toward a safe area until cleared.

Barrels will be extremely hot after firing.

CAUTION

When clearing gun and feeder of ammunition by hand, keep the gun horizontal. Failure to do so may cause ejected round to fall forward at the guide bar into the chamber and jam the gun.

1. If the barrel cluster is jammed and cannot be rotated, the gunner should immediately approach the weapon, disconnect the clutch electrical cable, and using a large screwdriver or pry bar between the barrels, attempt to rotate the barrel cluster counterclockwise. This will fire any rounds remaining in the barrel chambers if they can be rotated. The cluster should be rotated two full turns, with no firing during the last turn. If firing continues during the last turn, the clutch has failed to disengage; therefore, remove feeder and break belt if necessary.

2. If the barrel cluster cannot be rotated with the screwdriver or pry bar, proceed as follows:

a. Gun control unit ARM switch place at the off position.

b. Remove safing sector.

c. Disconnect ammunition chute at the feeder.

d. Separate ammunition belt at the feeder.

e. Remove rear feeder quick-connect pin.

f. Remove the feeder.

NOTE

When performing the following step, make sure that the bolts do not hit the opening in the gun housing.

g. Use a screwdriver or pry bar and attempt to rotate the barrel cluster. It may be required to extract the bolt assembly from the lock position. Using the screwdriver, push the roller rearward to unlock and extract it.

h. Remove all ammunition from the weapon, then clear the jam.

WARNING

The weapon is considered loaded and dangerous until you have verified that all chambers are clear.

i. Determine cause of the jam and make correct actions if possible. If jam is corrected, reload and continue firing.

3. If the PRESS TO TEST armed light fails to illuminate when the gun control unit ARM switch is place to on, verify ac and dc power is available and cabin utility circuits breaker are in. Ensure electrical cables are not broken or frayed and properly connected.

4-71. M134 Minigun Ammunition.

The minigun ammunition is connected to form a link belt; the rounds are used to hold two links together. The ammunition, 7.62 mm, comes in a container that holds 1500 rounds. All ammunition used in the minigun shall have the number "A165" after the lot number. Ammunition without this number must specify on the container that it can be used in the M-134 minigun.

Section III CARGO HANDLING AND RESCUE HOIST SYSTEMS

4-72. Cargo Hook System.

WARNING

Static electricity generated by the helicopter should be discharged before attempting a sling load pickup. Use a conductor between the helicopter and the ground to discharge the static electricity.

The system consists of a hook assembly (Figure 4-25) mounted on the lower center fuselage, cargo hook switches on the upper console (Figure 2-6), CARGO REL and EMER REL pushbuttons on each cyclic stick grip, CARGO HOOK RELEASE switch on the crewmember's pendant, and a SAFE EMER SHEAR switch on the cabin HOVER TRIM CONTROL panel. The hook capacity is limited to a maximum of 8,000 pounds, and has a throat and load beam of adequate area and configuration to accommodate load attachments with nylon slings. The system incorporates three modes of load release: (1) an electrical circuit actuated from the cockpit or cabin, (2) a manual release worked by the crewmember through a covered hatch in the cabin floor or by personnel on the ground, and (3) an emergency release system (cockpit or cabin controlled) using an electrically activated explosive charge. Power to the normal release system is provided by the No.2 dc primary bus through circuit breakers marked HOOK CONTR and CARGO PWR on the cabin overhead circuit breaker panel.

4-73. Cargo Hook Stowage.

The cargo hook can be placed in a stowed position (Figure 4-25) by opening the cargo hook access cover in the cabin floor, and pulling the hook to the right and up. The cargo hook shall be maintained in the stow position while not in use. When the hook is in the stowed position, the load beam rests on a spring-loaded latch assembly and is prevented from vibrating by a Teflon bumper applying downward pressure on the load beam. To release the hook from its stowed position, downward pressure is placed on the latch assembly lever, retracting the latch from beneath the load beam, allowing the cargo hook to swing into the operating position.

4-74. Cargo Hook Control Switches.

The cargo hook system utilizes switches on the upper console, cyclic grips, HOVER TRIM CONTROL panel, and crewmember's pendant (Figures 2-6 and 4-25). The upper console contains an indicator marked TEST and a switch that is labeled EMERG REL NORM/OPEN/SHORT, and switches that are labeled CONTR ARMING CKPT/ALL and SAFE/ARMED. The crewmember's pendant has a CARGO HOOK RELEASE switch and the HOVER TRIM CONTROL panel has a SAFE EMER SHEAR switch. Both cyclic grips have CARGO REL and EMER REL switches. Before a normal or emergency release operation, the SAFE/ARMED switch must be at the ARMED position to provide an electrical connection to the release switches and/or explosive cartridge circuits. The pilot and copilot CARGO REL switches on the cyclic will open the cargo hook latch when the upper console CONTR ARMING switches are at the CKPT or ALL and ARMED. The crewmember's CARGO HOOK RELEASE and SAFE EMER SHEAR switches will open the cargo hook latch when the upper console CONTR ARMING switches are at ALL and ARMED. The EMERG REL switch (OPEN and SHORT position) and TEST light permit checking of the emergency release circuit. When testing either position, if the release circuit is good, the TEST light will go on when the EMERG REL switch on either cyclic (pilot or copilot) or the SAFE EMER SHEAR switch on the HOVER TRIM CONTROL panel is activated. The following controls are located on the upper console for operating the cargo hook:

CONTROL	FUNCTION
EMERG REL	
TEST	Press to test (light should illuminate), also illuminates during OPEN or SHORT test if circuit passes the test.
NORM	Enables normal and emergency operations of the cargo hook controls.
OPEN	Allows testing of the cargo hook circuits to detect broken wire or open contacts.
SHORT	Allows testing of the cargo hook circuits to detect a short.
CONTR ARMING	
CKPT	Enables cyclic CARGO REL and EMER REL switches only for cargo hook normal and emergency release.

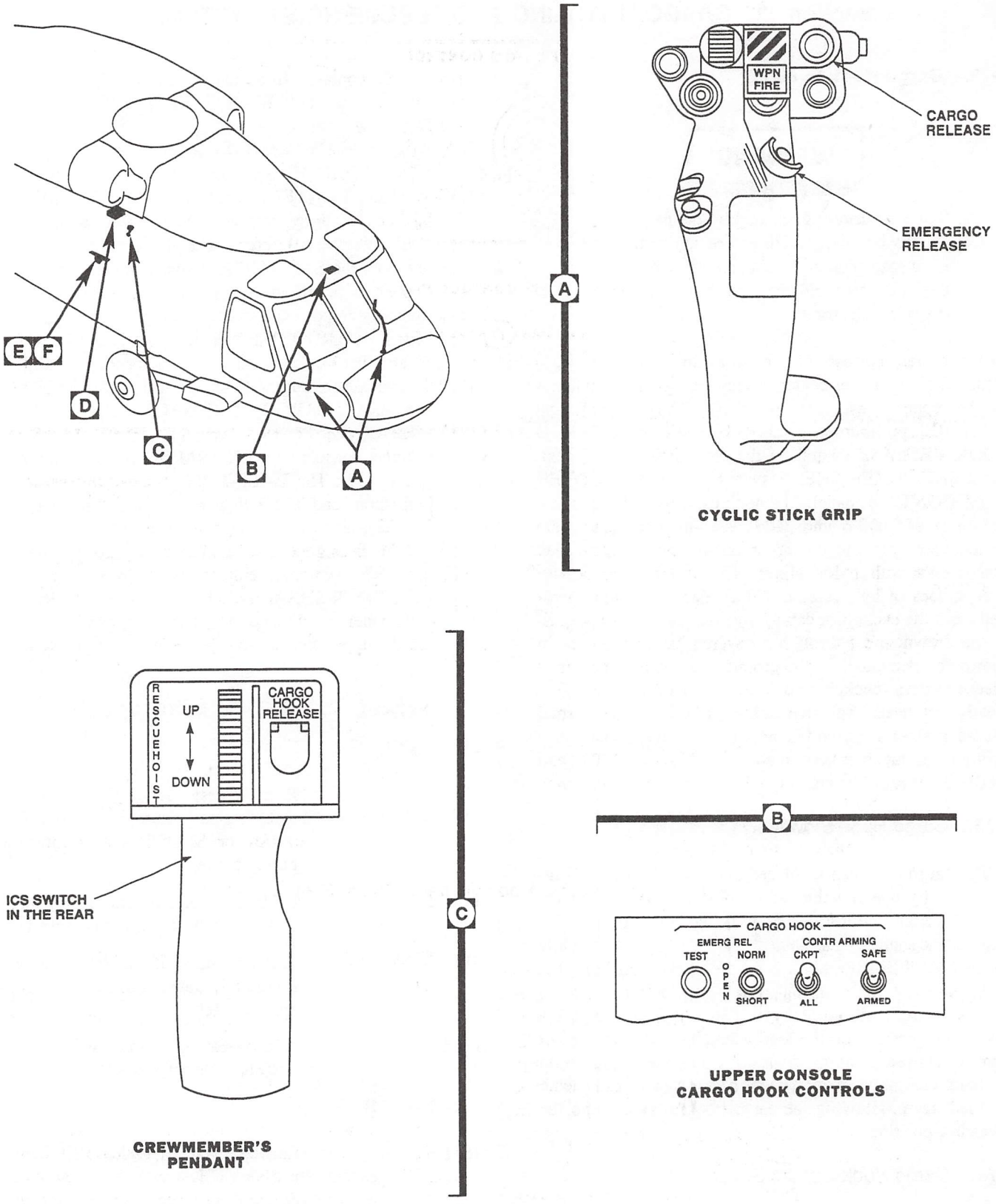

Figure 4-25. Cargo Hook System (Sheet 1 of 2)

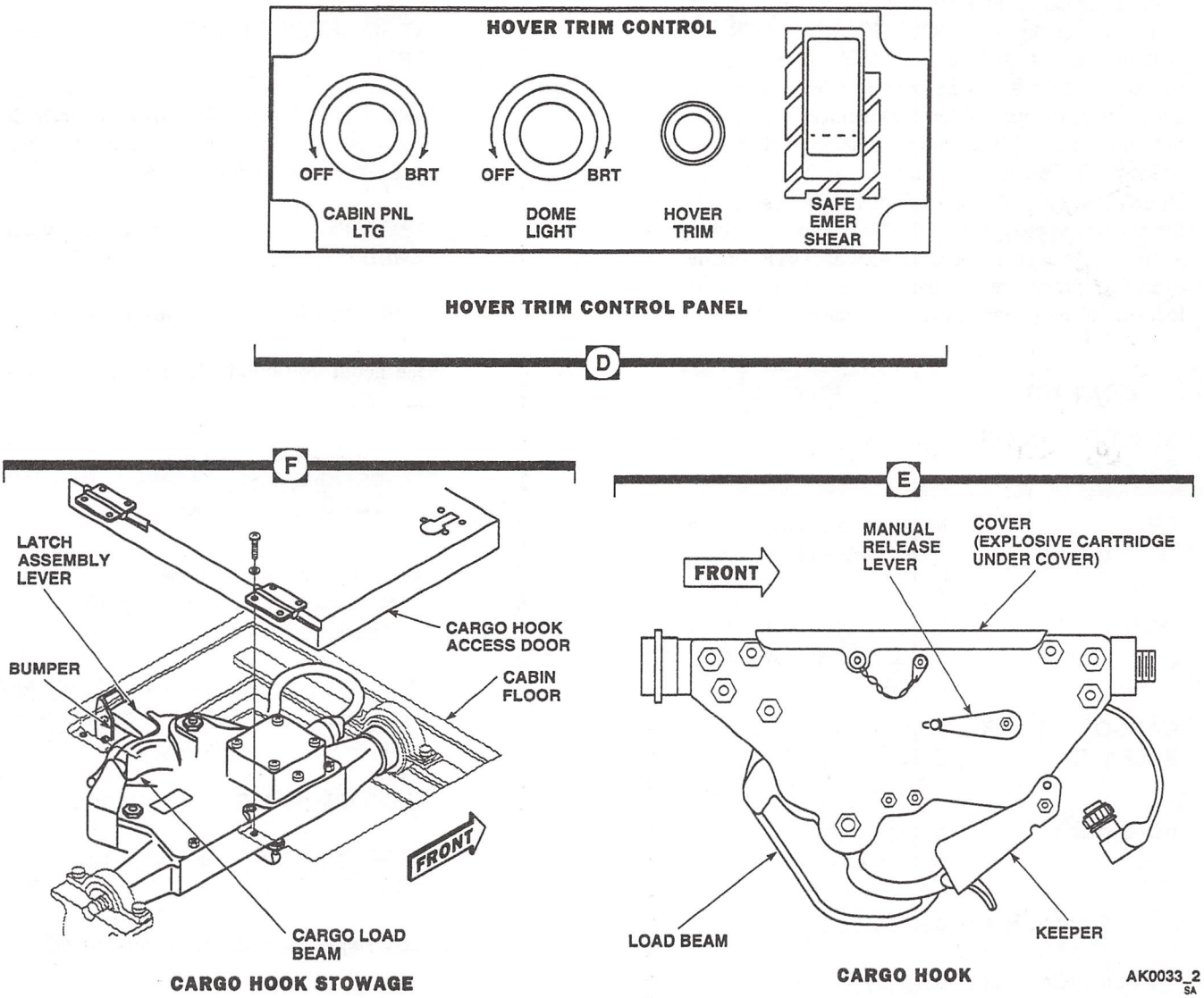

Figure 4-25. Cargo Hook System (Sheet 2 of 2)

CONTROL	FUNCTION
ALL	Enables cyclic CARGO REL and EMER REL switches, crewmember's pendant CARGO RELEASE switch, and HOVER TRIM CONTROL panel EMER SAFE SHEAR switch for cargo hook normal and/or emergency release.
SAFE	Disables all cargo hook release switches.
ARMED	Enables selected release switches for normal or emergency release of the cargo load.

4-75. Crewmember's Pendant Control.

The crewmember's pendant allows the crewchief to raise or lower the rescue hoist cable and open/release the cargo hook. The pendant also has an ICS switch for communications with the pilots (Figure 4-25). The pendant is located on the right side wall in the cabin near the doors. The

pendant provides the crewmember with an electrical release to open the cargo hook latch, which releases the cargo load when the cockpit CARGO HOOK CONTR ARMING switches are at ALL and ARMED. When the cover is raised, the switch can be pressed which allows the cargo hook latch to open. The crewmember's pendant control provides the crewchief with a variable speed control to raise or lower the rescue hoist cable when the cockpit RESCUE HOIST switch is at the ALL or CKPT position. Power to the pendant is provided by the No.2 dc primary bus through a circuit breaker marked HOOK CONTR on the cabin overhead circuit breaker panel. The following controls are located on the crewmember's pendant:

CONTROL	FUNCTION
RESCUE HOIST Switch	
UP	Raises rescue hoist cable when the CKPT OFF ALL switch is at CKPT or ALL.
DOWN	Lowers rescue hoist cable when the CKPT OFF ALL switch is at CKPT or ALL.
CARGO HOOK RELEASE	Releases cargo load when cockpit CARGO HOOK switches are at NORM, ALL, and ARMED.
ICS Switch	Enables crewmember to communicate with the pilots.

4-76. Normal Release.

Normal release of external cargo is performed by pressing the CARGO REL switch on either cyclic stick grip or the CARGO HOOK RELEASE on the crewmember's pendant control. The CARGO HOOK CONTR ARMING switches must be at ALL and ARMED or CKPT and ARMED (cyclic switches only). An advisory message on the MFDs will go on, indicating HOOK ARMED. This informs the pilot that electrical power is applied to the control circuit; actuation of any active release switch will open the cargo hook latch and release the load. When a cargo release switch is pressed and the release solenoid begins to move, a switch causes the CARGO HOOK OPEN advisory message to appear, the load arm will swing open releasing the cargo. When the sling is detached from the load beam, spring tension on the arm will cause it to close and relatch, turning off the CARGO HOOK OPEN advisory message. The normal release system is a one-shot cycle; once the solenoid travel begins and the load arm relatches, the release cycle can again be initiated.

4-77. Operational Check Normal Release Mode.

1. CARGO HOOK EMERG REL switch - NORM.
2. CARGO HOOK CONTR ARMING switch - As required. CKPT for pilot and copilot check, or ALL for crewmember check.
3. CARGO HOOK CONTR ARMING switch - ARMED.
4. HOOK ARMED advisory message - On.
5. Place about 20 pounds downward pressure on load beam.

CAUTION

Cargo hook release solenoid will be damaged if cargo hook release button is pressed for more than 12 seconds.

6. CARGO REL switch (pilot and copilot cyclics); CARGO HOOK RELEASE (crewmember's pendant) - Press and release.
7. CARGO HOOK OPEN advisory message - On.
8. CARGO HOOK OPEN advisory message - Off when hook closes.
9. Repeat steps 5. through 8. for copilot and crewmember position.

4-78. Manual Release.

Manual release of external cargo can be done from the cabin through a covered port in the floor, or by ground personnel from outside the helicopter. Turning the release control on the right side of the hook (Figure 4-25) clockwise, causes the latching mechanism to release the load beam. The load beam will not move unless a downward pressure is exerted to cause opening. With power applied to the helicopter and the CARGO HOOK CONTR ARMING switch at ARMED, the CARGO HOOK OPEN advisory message will go on at the start of release control turning, and will go off at the end of release control rotation.

4-79. Operational Check Manual Release Mode.

1. Manual release lever spring - Installed.

2. Place about 20 pounds downward pressure on load beam.

3. Manual release control - Pull up, then turn fully clockwise and release.

4. Load beam - Check open.

5. CARGO HOOK OPEN advisory message - On.

6. When downward pressure is released, load beam will close and latch.

7. CARGO HOOK OPEN advisory message - Off when hook closes.

4-80. Emergency Release Circuit Tester.

The cargo hook emergency release circuit tester (Figure 2-6), marked CARGO HOOK EMERG REL on the upper console, consists of a test light and switch. The light marked TEST will illuminate during circuit testing to indicate the system is functioning properly. The switch marked NORM, OPEN, and SHORT is at NORM during normal operations. When the CARGO HOOK EMERG REL switch is placed to OPEN or SHORT and the EMER REL switch on the pilot's or copilot's cyclic, or SAFE EMER SHEAR switch on the HOVER TRIM CONTROL panel is pressed, the CARGO HOOK EMERG REL TEST light will go on if the circuit is good.

4-81. Cargo Hook Emergency Release Circuit Check.

1. CARGO HOOK EMERG REL TEST light - Press, light should illuminate.

CAUTION

To prevent unintentional discharge of the cargo hook explosive cartridge, the pilot shall call off each procedural step of the emergency release circuit test before that step is done. Station being checked shall reply to pilot's command.

2. Pilot's release check.

   a. Verify RESCUE HOIST panel CKPT/OFF/ALL switch is at OFF.

   b. Short test.

      (1) CARGO HOOK EMERG REL switch - SHORT.

      (2) Pilot's cyclic EMER REL button - Press and hold.

      (3) CARGO HOOK EMERG REL TEST light - On.

      (4) Pilot's cyclic EMER REL button - Release, TEST light should be off.

      (5) Repeat steps (2) through (4) for copilot's EMERG HOOK REL button, and crewmember's cargo hook SAFE EMER SHEAR switch on the HOVER TRIM CONTROL panel.

   c. Open test.

      (1) CARGO HOOK EMER REL switch - OPEN.

      (2) Repeat steps (2) through (5) of short test for open test.

3. CARGO HOOK EMERG REL switch - NORM. If the cargo hook is not to be used immediately after completing the circuit test check, the EMERG REL switch shall remain at OPEN until ready for load pickup.

4-82. Emergency Release.

WARNING

Before using the EMER REL switch to release the cargo hook load, ensure the RESCUE HOIST control panel CKPT/OFF/ALL switch is at OFF position to prevent severing the rescue hoist cable.

NOTE

When the emergency cargo hook release has been used and a replacement squib (explosive cartridge) is not available, the cargo hook can not be used until the explosive device is replaced, since the cargo hook latch will not close and lock.

The emergency release is used when the electrical and manual releases are inoperative, and the load must be jettisoned. Emergency release of an external cargo load is performed by pressing the EMER REL button on either cyclic

grip or the SAFE EMER SHEAR switch on the HOVER TRIM CONTROL panel. The CARGO HOOK CONTR ARMING switches must be at ALL and ARMED or CKPT and ARMED (cyclic switches only). Upon activation of either switch/button, an electrically fired explosive cartridge drives the locking piston to the open position. With the CARGO HOOK EMER REL switch at NORM and CARGO HOOK CONTR ARMING switch at ARMED, power will be applied to the emergency release switch. Pressing an active emergency release switch activates the explosive cartridge releasing the load arm lock. The weight of the load will cause the load arm to open. Once the emergency release is used, the hook will remain open and the CARGO HOOK OPEN advisory message will remain on until the explosive cartridge device is replaced. When the explosive cartridge device is replaced the load arm will close, the advisory message will be removed, and the emergency release mode is returned to operation. Power to the emergency release system is from the dc essential bus through a circuit breaker marked HOIST/HOOK EMER RLSE on the upper console.

4-83. Preflight.

When cargo hook loads are to be carried, checks within this paragraph and procedures of paragraphs 4-74, 4-76, 4-77, and 4-79 apply.

1. Cargo hook - Check condition, security and explosive cartridge installed.
2. Emergency release system - Check. (Go to paragraph 4-78.)
3. Manual release - Check. (Go to paragraph 4-76.)

4-84. Before Takeoff.

1. CARGO HOOK EMERG REL switch - NORM.
2. CARGO HOOK CONTR ARMING switch - ARMED.

4-85. Emergency Release Procedure.

1. Pilot's or copilot's cyclic EMER REL button or HOVER TRIM CONTROL panel SAFE EMER SHEAR switch - Press.
2. CARGO HOOK OPEN advisory message - On. Light will remain on until the explosive cartridge is removed and replaced.

4-86. In-flight Procedures.

CAUTION

When a load is suspended from the cargo hook, the load shall not exceed a 30° coning angle. To prevent damage to the cargo hook keeper, the pilot shall use extreme care to prevent placing load pressure on the keeper.

During the flight, crewmember shall check for excessive load coning periodically.

4-87. Rescue Hoist System.

WARNING

Static electricity generated by the helicopter should be discharged before attempting a rescue hoist pickup. Use a conductor between the helicopter and the ground to discharge the static electricity.

The rescue hoist system (Figure 4-26) consists of a hoist assembly, RESCUE HOIST control panels (lower console and cabin overhead), crewmember's hand grip, crewmember's pendant, and HOVER TRIM CONTROL panel. The hoist system also uses the crewmember's pendant control to raise and lower the rescue hoist cable. The hoist has the capacity to lift 600 pounds. Hydraulic power to the hoist is supplied by the backup hydraulic system. The rescue hoist cable is capable of speeds up to 215 feet per minute. It is supported by a fixed tubular strut above the cabin door which is bolted to a support fitting on the fuselage. The hoist contains 225 usable feet of cable. A guillotine-type cable cutter and automatic cable brake is installed on the hoist system. The automatic brake holds the cable at its present position when power is removed. The first and last 20 feet of the cable is bright orange to warn the operator when an end is approaching. When the hoist is being raised or lowered at speeds greater than 50 feet per minute, the speed will automatically decelerate to 50 feet per minute within 8 to 10 feet of the full up or 3 to 5 feet full down position. The hoist hook is attached to the cable end by a ball bearing swivel. The hoist assembly consists of a winch, hydraulic drive motor, heat exchanger, fan, and control box. Power to the rescue hoist system is provided by the No.2 ac primary bus through a circuit breaker marked RESCUE HOIST PWR on the cabin overhead circuit breaker panel.

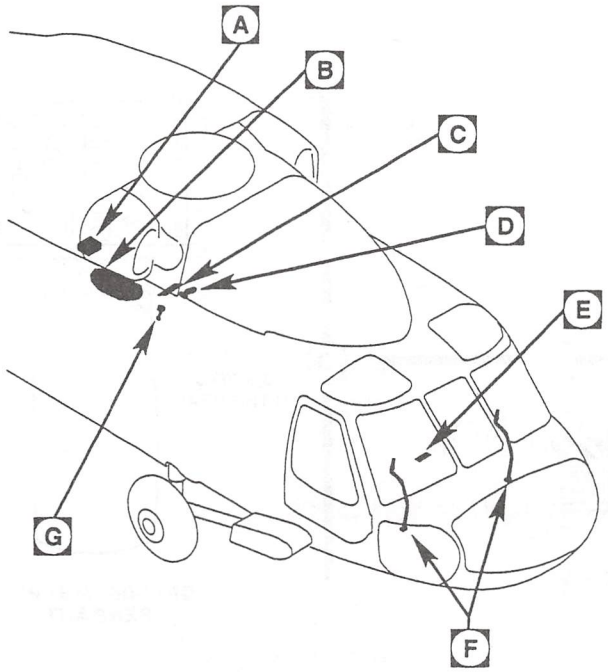

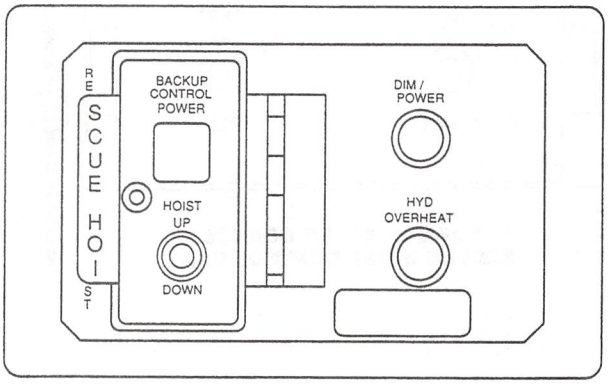

CABIN RESCUE HOIST CONTROL PANEL

A

B

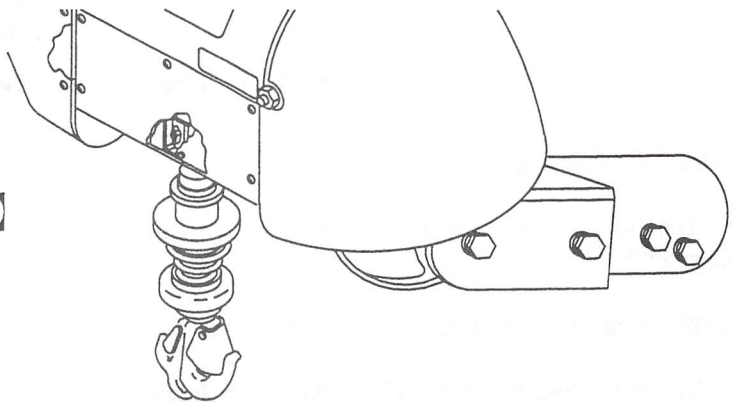

RESCUE HOIST ASSEMBLY

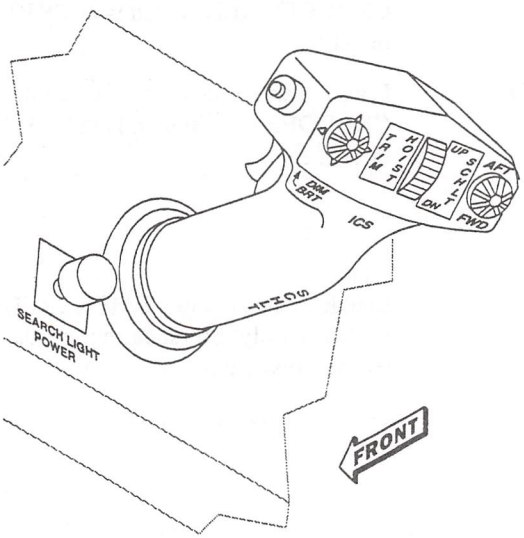

CREWMEMBER'S HOVER GRIP

C

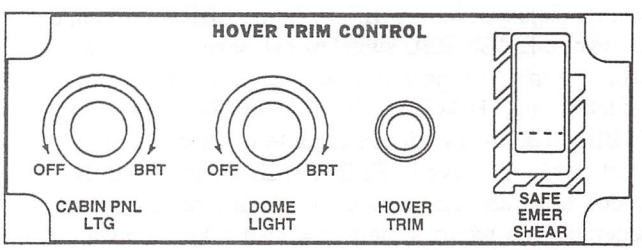

HOVER TRIM CONTROL PANEL

D

AK0034_1
SA

Figure 4-26. Rescue Hoist System (Sheet 1 of 2)

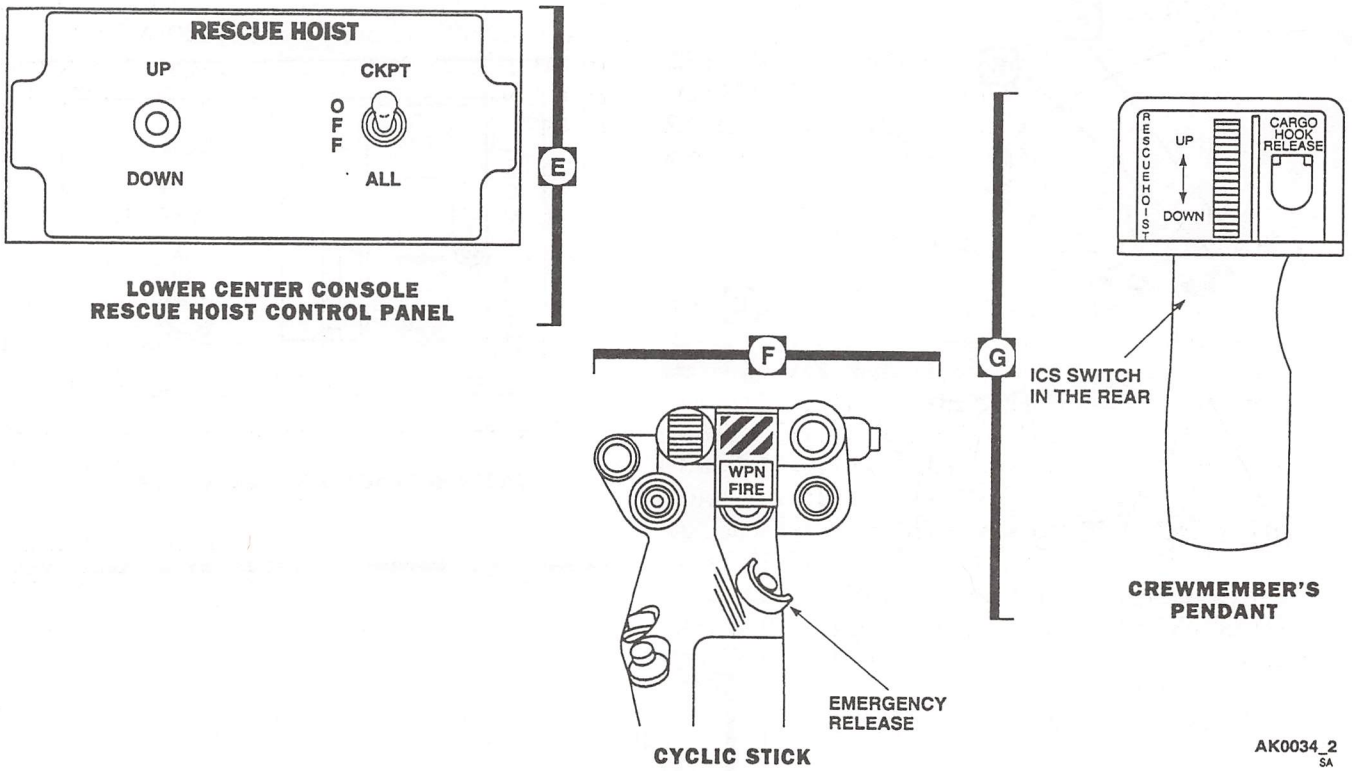

Figure 4-26. Rescue Hoist System (Sheet 2 of 2)

4-88. Duty Cycle.

The hoist system duty cycle limitations are listed in Chapter 5.

4-89. Cockpit RESCUE HOIST Control Panel.

The cockpit RESCUE HOIST control panel located on the lower console (Figure 2-7 and 4-26) allows the pilot to raise or lower the rescue hoist and arm emergency release capability. The switch marked CKPT/OFF/ALL, allows the selected crewmembers to shear the rescue hoist cable under emergency conditions. With the switch at either the CKPT or ALL position, the HOIST ARMED advisory message will be displayed on the MFDs. In the CKPT position, only the cyclic EMER REL switches can sever the rescue hoist cable. In the ALL position, the cockpit cyclic EMER REL switches and HOVER TRIM CONTROL panel SAFE EMER SHEAR switch are capable of shearing the rescue hoist cable. The cyclic EMER REL switch controls both rescue hoist and cargo hook emergency release functions, depending on which system is armed. The following controls are located on the cockpit rescue hoist control panel:

CONTROL	FUNCTION
UP/DOWN Switch	
UP	Raises rescue hoist cable when the CKPT OFF ALL switch is at CKPT or ALL.
DOWN	Lowers rescue hoist cable when the CKPT OFF ALL switch is at CKPT or ALL.
CKPT/OFF/ALL/ Switch	
CKPT	Enables the cyclic EMER REL switches only for shearing of the rescue hoist cable.
OFF	Inhibits shearing of the rescue hoist cable.

CONTROL	FUNCTION
ALL	Enables cyclic EMER REL switches and HOVER TRIM CONTROL panel SAFE EMER SHEAR switch to shear the rescue hoist cable.

4-90. Cabin RESCUE HOIST Control Panel.

The cabin control panel (Figure 4-26) is in the right cabin overhead, aft of the cabin door. It controls backup electrical power to the rescue hoist, when needed in an emergency, by means of a BACKUP CONTROL POWER switch on the cabin RESCUE HOIST control panel. When pressed, power is applied to the HOIST UP/DOWN switch on the cabin RESCUE HOIST control panel and cable speed is fixed at 85 feet per minute (backup mode). A NORMAL POWER light provides the crewchief with an indication when the rescue hoist is not the backup mode. A HYD OVERHEAT light illuminates when the hydraulic fluid in the rescue hoist is over 116°C (240°F). The following controls and indicators are located on the cabin RESCUE HOIST control panel:

CONTROL	FUNCTION
BACKUP CONTROL POWER	Enables the cabin RESCUE HOIST panel only for raising and lowering the rescue hoist cable (emergency use only).
HOIST Switch	
UP	Raises rescue hoist cable.
DOWN	Lowers rescue hoist cable.
NORMAL POWER	Illuminates when rescue hoist system is not in the backup mode.
HYD OVERHEAT	Illuminates when rescue hoist hydraulic temperature is above 116°C (240°F).

4-91. HOVER TRIM CONTROL Panel.

The HOVER TRIM CONTROL panel is located on the right cabin overhead area near the cabin door. The HOVER TRIM CONTROL panel contains a HOVER TRIM light, CABIN PNL and DOME LIGHT rheostats, and a SAFE EMER SHEAR guarded switch. The SAFE EMER SHEAR switch is used with both the rescue hoist and cargo hook emergency release circuits, depending on which system is armed. If both the rescue hoist and cargo hook are armed, activation of the SAFE EMER SHEAR switch will fire squibs in both systems, releasing their loads. The HOVER TRIM light will illuminate when the CREW HVR mode on the AFCS CONTROL panel is engaged. The following control and indicator are located on the HOVER TRIM CONTROL panel:

CONTROL	FUNCTION
CABIN PNL LTG	Rheostat control for turn on and adjusting the cabin panel lights.
DOME LIGHT	Rheostat control for turn on and adjusting cabin dome lights.
HOVER TRIM light	Illuminates when the CREW HVR mode on the AFCS CONTROL panel is engaged.
SAFE EMER SHEAR	Emergency release for both the rescue hoist and cargo hook when the cockpit control(s) for the respective system is at ALL and/or ARMED.

4-92. Crewmember's Hover Grip.

The hover grip provides the hoist operator with the capability to position the aircraft and raise or lower the rescue hoist cable during rescue hoist operations (Figure 4-26). The crew hover grip TRIM switch has a control authority of ±5 knots laterally and longitudinally about the reference values selected on the AFCS CONTROL panel LONG VEL and LAT VEL control knobs when CREW HVR is active. The HOIST UP/DOWN control raises or lowers the rescue hoist cable with backup hydraulic pump on. The SCH LT switch turns on/off the hoist searchlight and provides forward, rearward, left, and right movement of the hoist searchlight. A DIM/BRT switch allows the crewmember to adjust the intensity of the hoist searchlight. A SEARCH LIGHT POWER indicator illuminates when the searchlight is on. An ICS switch is available for communications with the pilots. The following controls are located on the hover grip:

CONTROL/ INDICATOR	FUNCTION
TRIM Switch	Allows the crewmember to move the helicopter 5 knots laterally and longitudinally about the reference values.
HOIST Switch	
UP	Raises rescue hoist cable.

CONTROL/ INDICATOR	FUNCTION
DOWN	Lowers rescue hoist cable.
ICS Switch	Enables crewmember to communicate with the pilots.
SCH LT Switch	Turns power on/off and moves hoist searchlight.
AFT position	Pressing switch to the AFT position moves hoist searchlight rearward.
FWD position	Pressing switch to the FWD position moves hoist searchlight forward.
Pressing Switch Left	Pressing switch to the left rotates hoist searchlight counterclockwise.
Pressing Switch Right	Pressing switch to the right rotates hoist searchlight clockwise.
DIM/BRT	Pressing upward on the DIM/BRT switch increases the intensity of the rescue hoist searchlight and pressing downward on the DIM/BRT switch decreases the intensity of the rescue hoist searchlight.
SEARCH LIGHT POWER indicator	Illuminates when hoist searchlight is turned on.

4-93. Hydraulic Operation.

Hydraulic power is supplied to the rescue hoist from the backup pump via the utility module. Rescue hoist manifold and pressure/return hoses are routed within the support strut fairing with hydraulic quick disconnects at the fairing to ease removal and installation. The pressure line contains a priority valve that isolates the rescue hoist in case of a reduction in the hydraulic power supply, to prevent starvation of essential utility services. The return line contains a temperature sensor switch that provides the signal to the HYD OVERHEAT warning light on the cabin RESCUE HOIST control panel. Operation of the rescue hoist system is controlled through the rescue hoist control panels in any of three ways below.

a. The primary method is from the cabin by means of the crewmember's pendant or hover grip. The pendant or hover grip controls the hoist cable in either direction at any speed up to 215 feet per minute. Speed is controlled by the amount of rotation applied to the UP/DOWN thumbwheel control on the pendant or hover grip. The thumbwheel is spring-loaded to the neutral position.

b. The secondary method is from the cockpit by means of the UP/DOWN switch on the cockpit RESCUE HOIST control panel. The UP/DOWN switch controls the hoist cable in either direction at a fixed speed of 100 feet per minute. The cockpit UP/DOWN switch has priority over the crewmember's pendant and/or hover grip switches.

CAUTION

When operating in the BACKUP CONTROL POWER mode, all limit switches are inactive. It is possible to run the cable completely off the drum, backwind the cable, or jam the hook into the cable housing.

c. The third (emergency) method is from the cabin by means of the cabin RESCUE HOIST control panel BACKUP CONTROL POWER and HOIST UP/DOWN switches. These switches provide emergency power and operational control for the rescue hoist when normal power system fails. When in the emergency switch positions, cable speed is limited to 85 feet per minute. The BACKUP CONTROL POWER and HOIST UP/DOWN switches operate emergency up, down, and shutoff valves which bypasses normal system failures. When the cabin or cockpit switches are controlling the hoist, the hoist cable will automatically stop at fully up or fully down position by internal limit switches. Limit switches are bypassed when the hoist is in the backup (emergency) mode; therefore, the HOIST UP/DOWN switch must be released to stop the hoist cable. Power for the backup control mode of operation is provided from the No.2 dc primary bus through a circuit breaker marked RESCUE HOIST AUX CONTR on the cabin overhead circuit breaker panel.

4-94. Hoist Cable Shear System.

CAUTION

Before using the EMER REL switch to sever the rescue hoist cable, ensure the cargo hook system is not ARMED to prevent releasing the cargo load.

Hoist cable shearing is by a guillotine cartridge controlled by the rescue hoist shear relay. Shearing can be energized from the cabin HOVER TRIM CONTROL panel SAFE EMER SHEAR switch or either cyclic EMER REL switch. When the helicopter has weight-on-wheels or the cockpit RESCUE HOIST control panel switch is at the OFF

position, the shearing capability is disabled. The cockpit RESCUE HOIST control panel switch must be at ALL (HOVER TRIM CONTROL panel SAFE EMER SHEAR and cyclic EMER REL switches) or CKPT (cyclic EMER REL switches only) to enable the respective emergency release circuits. Power to the rescue hoist emergency release circuit is provided by the dc essential bus through a circuit breaker marked HOIST/HOOK EMER RLSE on the upper console circuit breaker panel.

4-95. Rescue Hoist Operational Check.

CAUTION

During rescue hoist checks while on the ground, always have a crewmember apply tension to the cable to prevent backlash and/or hoist jams.

Operation of the rescue hoist in the backup mode is for emergency situations, except for preflight checks, routine raising and lowering of the hoist in the backup mode shall be avoided.

NOTE

Do not operate any hoist control switches without the backup pump in operation.

1. BACKUP HYD PUMP switch - ON.
2. Cockpit RESCUE HOIST switch - CKPT. (Arms rescue hoist emergency release circuit only for cyclic EMER REL switches.)
3. HOIST ARMED advisory message activated on MFDs. (Indicates rescue hoist emergency release circuit is armed.)
4. Pilot lowers hoist cable by pressing the cockpit RESCUE HOIST control panel switch toward the DOWN position.
5. Pilot raise hoist cable by pressing the cockpit RESCUE HOIST control panel switch toward the UP position.
6. Cockpit RESCUE HOIST control panel switch - ALL. (Arms rescue hoist emergency release circuit for cyclic EMER REL switches and HOVER TRIM CONTROL panel SAFE EMER SHEAR switch.)
7. Crewmember - Perform hoist check using pendant UP/DOWN control.
   a. Using crewmember's pendant, lower rescue hoist cable to the ground.
   b. Using the crewmember's pendant, raise rescue hoist cable to full up position.
8. Repeat steps a. through b. of 7. above using the crewmember hover grip control.
9. Cockpit RESCUE HOIST control panel switch - OFF.
10. HOIST ARMED advisory message should disappear from MFDs.
11. BACKUP HYD PUMP switch - As required.

Section IV MISSION FLEXIBLE SYSTEMS

4-96. Internal Auxiliary Tanks.

The internal fuel tank installation consists of two, three, or four self-sealing crashworthy tanks. Each tank holds 170 gallons of usable fuel and contains a low-level switch, two high-level switches, fuel/defuel shutoff valve, gravity refuel port, refuel/transfer line with a breakaway valve, and a vent line with a breakaway valve. The internal auxiliary tanks fuel level cannot be measured by the IASS fuel quantity system; however, a fuel quantity indicator, a FUEL XFER switch, and a FUEL SENSOR WARNING light on the instrument panel provide information on internal auxiliary fuel tanks quantity and flow status.

4-97. External Fuel Tanks.

Each external fuel tank installation consists of a jettisonable crashworthy 230-gallon fuel tank, fuel quantity probe, low-level switch, high-level sensor float valve, fuel/defuel valve, vent valve, sump drain, drop valve, and gravity refueling port. The tanks are mounted on cantilever supports attached to the aircraft fuselage. The tank-to-support structure mountings are equipped with two ejector squibs per rack that permit the tanks to be jettisoned electrically. The mounting attitude of the tank provides expansion space while refueling in a normal ground attitude, and maximum fuel use during cruise. Fueling of the auxiliary tanks can be accomplished either through the individual gravity fuel ports in each tank, through the main tank pressure refueling port, or through the aerial refueling probe.

4-98. Fuel Transfer System.

External and internal auxiliary tanks fuel transfer is accomplished by 1 of 2 fuel pumps (one redundant pump) and is controlled from the FUEL MGT panel. Fuel transfer from both external and internal auxiliary tanks can be performed automatically or manually. An automatic shutoff circuit and FUEL SENSOR WARNING indicator have been added to shutoff fuel transfer pumps if not fuel is sensed in the transfer lines, longer than 5 seconds. This shutoff circuit can be bypassed by placing the FUEL XFER switch on instrument panel to MANUAL. Transfer rate from the external and internal auxiliary fuel tanks to the main tanks is 364 pounds per minute. Power to the main tanks is provided by the No.1 and No.2 ac primary buses through circuit breaker marked NO.1 FUEL XFER PUMP and NO.2 FUEL XFER PUMP on the cabin circuit breaker panel.

4-99. Fuel Management Panel.

The FUEL MGT panel is located on the lower console (Figure 2-7 and 4-27). It provides fuel transfer capabilities for the external and internal auxiliary tanks, when installed, to the main tanks. In addition to transfer capabilities, it controls valves for aerial refueling probe extension and retraction, and aerial refueling. The following control and indicators are on the FUEL MGT panel:

CONTROL	FUNCTION
INT AUX	
XFER	Opens shutoff valve to enable transfer from the internal auxiliary tanks to main fuel tanks.
REFUEL	Opens shutoff valve to allow internal auxiliary fuel tanks to be filled during refueling.
OFF	Disables refueling and transfer capabilities of internal auxiliary tanks.
OVER FLOW light	Illuminates when fuel is vented overboard through the fuel vent system.
EXT TANK JETT	Upon activation of either switch, external tanks will jettison.
MAIN	
SHUTOFF	Spring loaded to NORM, disables refuel capability to main tanks. Allows fuel to continue to flow into the internal auxiliary tanks until they are full, during refueling when the main tanks are full.
NORM	Enables automatic refueling for the main and internal auxiliary tanks.
MODE SEL	
XFER	Enables transfer from the external tanks to main fuel tanks.
REFUEL	Allows external fuel tanks to be filled during refueling.

CONTROL	FUNCTION
PROBE	Enables EXTEND/RETRACT switch on FUEL MGT panel.
AUTO	Enables automatic transfer/ refueling between external tanks and main tanks.
MANUAL	Enables manual transfer/refueling between external tanks and main tanks.
MAN EXT TANK	
FLOW	Enables fuel transfer/refueling to or from the external tanks with MODE SEL switch at MANUAL.
OFF	Disables fuel transfer/refueling to or from the external tanks with MODE SEL switch at MANUAL.
PUMP	
NO.1	Enables No.1 pump for fuel transfer.
NO.2	Enables No.2 pump for fuel transfer.
PROBE Controls	
EXTEND	Extends aerial refueling probe with MODE SEL switches are at PROBE and AUTO.
RETRACT	Retracts aerial refueling probe with MODE SEL switches are at PROBE and AUTO.
STATUS lights	
RDY	Illuminates when aerial refueling probe is fully extended and locked.
UNLKD	Illuminates when aerial refueling probe is not locked in either extended or retracted position.
LIGHT	Variable potentiometer to control the refueling probe light intensity.

4-100. Auxiliary Fuel Quantity Indicator.

The auxiliary fuel quantity indicator (FQI) is a bar graph and digital display that shows auxiliary fuel quantity and system faults. The two bar graph liquid crystal displays represent fuel weight in the No.1 and No.2 internal auxiliary tanks. Total fuel in the No.3 and No.4 internal auxiliary tanks is displayed by holding the BIT test switch on the instrument panel to the SEC position. The three digit numeric display totals fuel weight x 100 for internal auxiliary fuel tanks 1, 2, 3, and 4 (if installed). When fuel quantity in any internal tank drops below 250 pounds, the total display and fault code error display will flash until acknowledged by placing the BIT switch to the RESET position. The following controls and functions are associated with the FQI:

CONTROL	FUNCTION
FQI switch	
RESET	Clears error messages and stops flashing display.
SEC	Displays bar graph fuel quantity in internal auxiliary tanks No.3 and No.4
BIT	Initiates built-in-test functions.
FUEL XFER Switch	
AUTOMATIC	Turns FUEL SENSOR WARNING indicator on and shuts off fuel transfer pumps if no fuel is sensed longer than 5 seconds..
MANUAL	Turns FUEL SENSOR WARNING indicator on.

4-101. Automatic Transfer.

Automatic fuel transfer to the main tanks is from the external tanks only. Fuel transferred from the external tanks or external and internal tanks combined. To select automatic fuel transfer from external tanks, the MODE SEL switches on the FUEL MGT panel (Figure 4-27) must be in XFER and AUTO, and the PUMP switch must be at the NO.1 or NO.2 position. The AUTO mode sequences fuel transfer to keep the CG within limits. To select automatic fuel transfer from the external and internal auxiliary tanks, the MODE SEL switches on the FUEL MGT panel must be at XFER and AUTO, the INT AUX switch to XFER and the PUMP switch must be at NO.1 or NO.2 position. Automatic fuel transfer is initiated when fuel in both main tank is less than 1050 pounds ±10%, and one tank is less than 887 pounds ±10%. Fuel transfer terminates when one main tank reaches 1050 pounds ±10%. This process is repeated until the external and internal auxiliary fuel supply is exhausted. Fuel transfer from the external and internal auxiliary tanks occurs simultaneously, until all tank have

reached the low-level shut off point, at which time all fuel transferring is terminated. To enable automatic fuel transfer, perform the following:

1. FUEL XFER switch on the instrument panel - AUTOMATIC.
2. FUEL MGT panel INT AUX switch - XFER, as desired.
3. PUMP switch - NO.1 or NO.2.
4. FUEL MGT panel MODE SEL switches - XFER and AUTO.
5. When fuel transfer is complete, place MODE SEL switches on the FUEL MGT panel at PROBE and MANUAL, and INT AUX switch at OFF.

NOTE

The NO FUEL TRANSFER caution message will come on any time the fuel in either main tank is below 550 pounds ±10%. The NO FUEL TRANSFER caution message will stay on even during transfer as long as one main tank is below 550 pounds ±10%.

Due to the system design, any fuel remaining in the internal auxiliary tanks must be pumped out in the manual mode.

4-102. Manual Transfer.

WARNING

In manual mode, CG must be monitored by the pilots.

If FUEL XFER switch on the instrument panel is left at the MANUAL position, transfer pumps will overheat and fail or create a fire hazard if allowed to run dry for more than 20 seconds.

CAUTION

In manual mode, pumps may overheat if allowed to run when tanks are full and transfer has stopped. This mode must be closely monitored to prevent pump failure.

Manual transfer is an emergency operation mode only. The use of this mode must be limited to prevent dry operation.

In the manual mode, fuel can be transferred from both of the external and/or internal auxiliary tanks as required. When manually transferring from the internal auxiliary tanks only, isolate external tanks by closing external tank unisex valves. To initiate fuel transfer place MODE SEL switches to XFER and MANUAL, place PUMP switch to NO.1 or NO.2, and place INT AUX switch at XFER if desired. Fuel transfer sequencing is controlled manually with the MAN EXT TANK switch by placing the switch to FLOW or OFF, as desired. To enable manual fuel transfer, perform the following:

NOTE

The NO FUEL TRANSFER caution message will come on any time the fuel in either tank is below 550 pounds ±10%. The NO FUEL TRANSFER caution message will stay on even during transfer as long as one tank is below 550 pounds ±10%.

If fuel transfer is required from the internal auxiliary tanks only, the external tanks must be isolated from the system by closing the unisex valves on the external tank fuel lines.

1. FUEL XFER switch on the instrument panel - AUTOMATIC.
2. FUEL MGT panel MODE SEL switches - XFER and MANUAL.
3. INT AUX switch - XFER, as desired.
4. PUMP switch - NO.1 or NO.2.
5. MAN EXT TANK switch - FLOW.

NOTE

Ensure CG remains within limits during manual transfer.

6. Monitor left and right main fuel tank quantity readouts, when main fuel tanks quantity readouts are above 1050 pounds, place MAN EXT TANK switch - OFF.

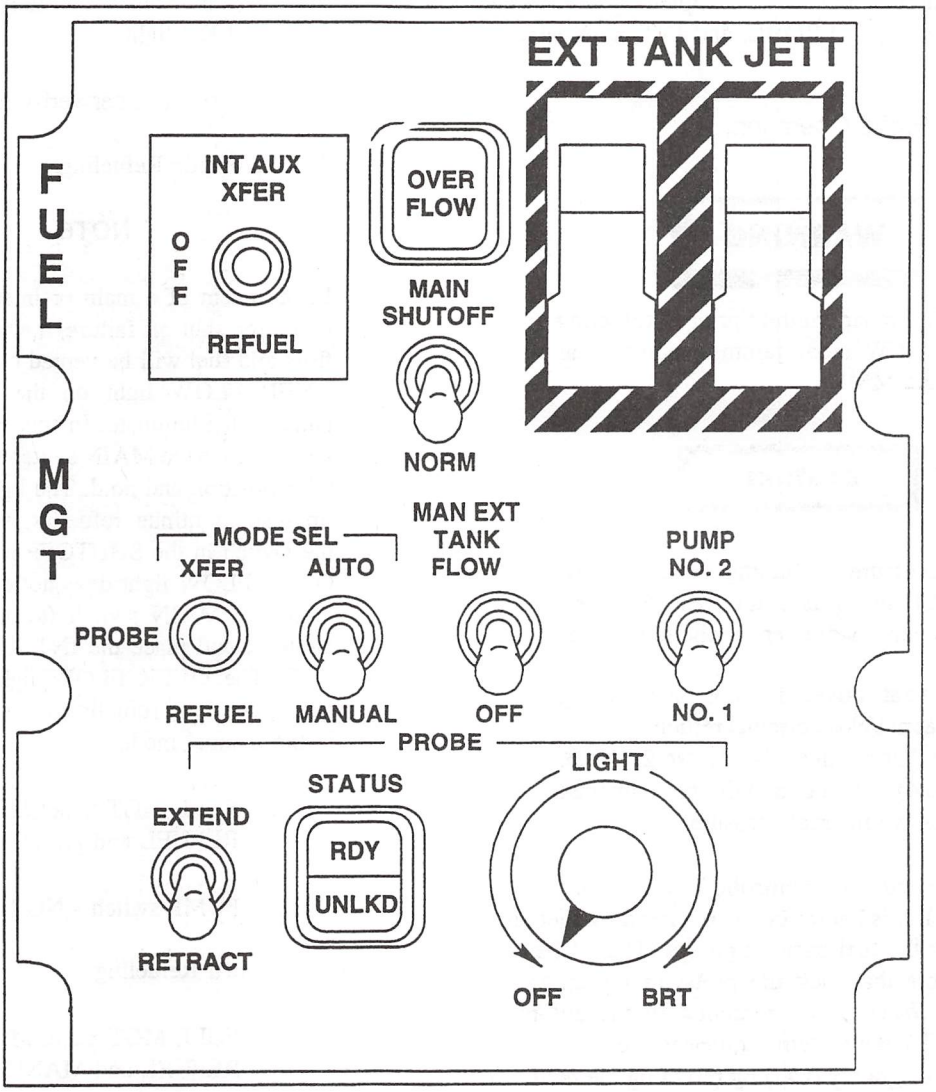

Figure 4-27. FUEL MGT Panel

7. When fuel transfer is complete, place MODE SEL switch - PROBE, and INT AUX switch - OFF.

4-103. Refuel Probe Operation.

WARNING

Turns off all radar emitters prior to refueling operations (CW radar jammer, pulse radar jammer, and MMR).

CAUTION

During pressure refueling, ensure left MODE SEL switch is at the REFUEL position to prevent inadvertent probe extension.

If unisex vent valves are not open during pressure (aerial/close circuit) refueling of internal auxiliary tanks (No.1, No.2, No.3, and/or No.4), the tanks will be damaged from excessive internal pressure.

The probe is electrically controlled by switches on the FUEL MGT panel. It is hydraulically operated by fuel pressure generated by the fuel transfer pumps. The probe contains lock actuators that lock the probe in the extend or retract positions. When aerial refueling in the automatic mode (MODE SEL), the system sequences fuel to maintain the correct center of gravity (CG) by refueling the main and internal auxiliary tanks (when installed) simultaneously before refueling the external auxiliary tanks. In the manual mode, the pilots must ensure CG limits are not exceeded while refueling. Over filling of any tank is prevented by a mechanical float stop. The refuel probe adapter (FSN 4930-00-625-5349) must be attached to ground refuel through the aerial the refuel probe adapter. To use the aerial refueling probe, perform the following procedure:

1. Fuel Probe Extension.
   a. FUEL MGT panel MODE SEL switches - PROBE and AUTO.
   b. PROBE control switch - EXTEND.
   c. PUMP switch - NO.1 or NO.2.
   d. STATUS UNLKD light illuminated while probe is extending, STATUS RDY light illuminated when fully extended and UNLKD light off.
   e. Crewmember verify fuel probe extension.
2. Automatic Refueling.

NOTE

In the event of a main or internal auxiliary tank high shut-off failure, the tank will overflow and fuel will be vented overboard. The OVER FLOW light on the FUEL MGT panel will illuminate. In this case, the pilot should place the MAIN switch to the SHUTOFF position and hold. The light should extinguish, continue refueling while holding the switch in the SHUTOFF position. If the OVER FLOW light does not extinguish, release the MAIN switch (switch returns to NORM) and place the INT AUX switch at OFF. The OVER FLOW light will extinguish, continue refueling the external tanks in the manual mode.

   a. FUEL MGT panel MODE SEL switches - REFUEL and AUTO.
   b. PUMP switch - NO.1 or NO.2.
3. Manual Refueling.
   a. FUEL MGT panel MODE SEL switches - REFUEL and MANUAL.
   b. PUMP switch - NO.1 or NO.2.

NOTE

Ensure CG remains within limits during manual refueling.

   c. MAN EXT TANK switch - FLOW.
   d. MAN EXT TANK switch - OFF, when tanks are full.
   e. MODE SEL switches - XFER and AUTO.
4. Refuel Probe Retraction.
   a. FUEL MGT panel MODE SEL switch - PROBE.

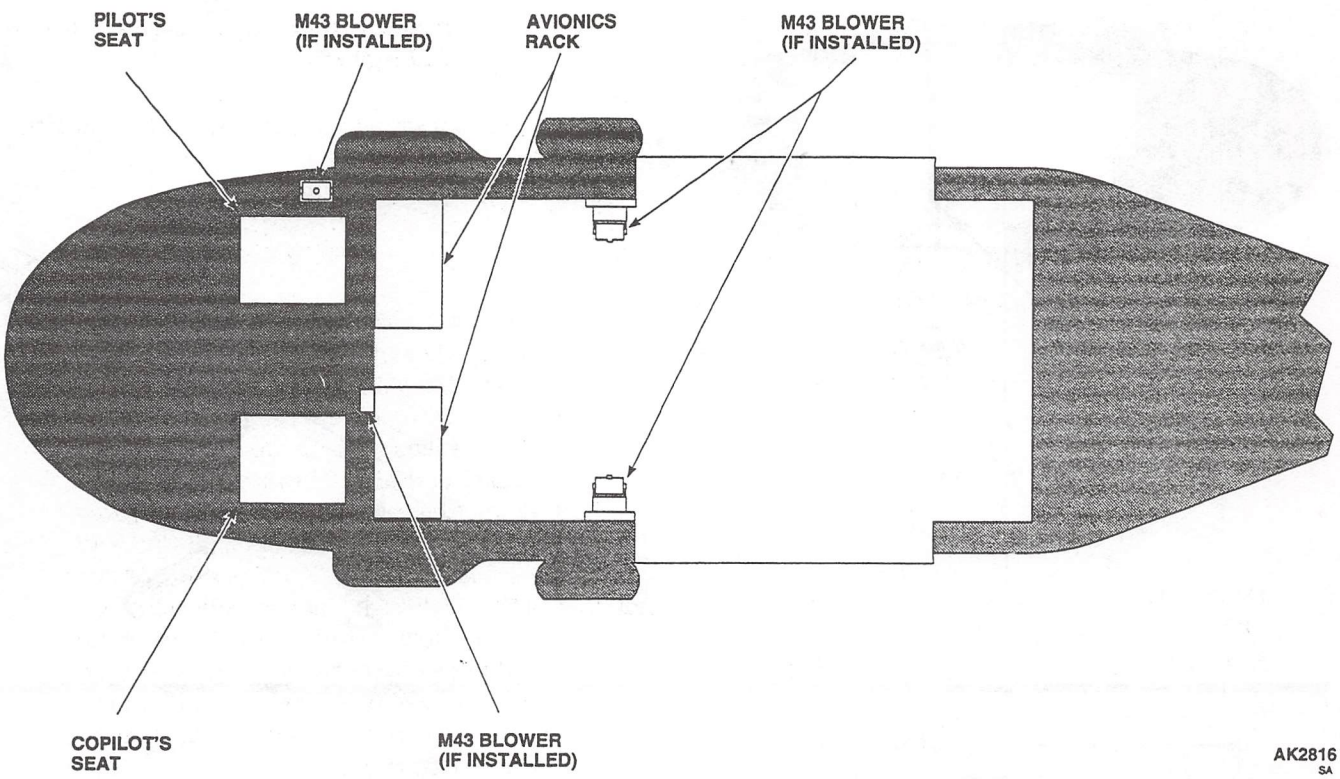

Figure 4-28. Mask Blower Units

b. PROBE control switch - RETRACT.

c. PUMP switch - NO.1 or NO.2.

d. STATUS UNLKD light illuminated while probe is retracting, STATUS RDY light off. UNLKD light off when probe is fully retracted

e. Crewmember verify fuel probe fully retracted.

4-104. Mask Blower Units.

The mask blower units (M-43) provide clean air for crewmembers when operating is an NBC environment. There are four mounting plates for installing the M-43 blower units in the aircraft, one for each crewmember (Figure 4-28). The M-43 blower is optional equipment and is installed per mission requirements. Each unit operates independently of the others. A power switch is located on the blower assembly to turn the M-43 blower on or off. Power to operate the M-43 units is provided by the No.1 and No.2 dc primary buses through circuit breakers marked CPLT NBC PWR, PLT NBC PWR, and CABIN NBC PWR located on the copilot, pilot, and cabin overhead circuit breaker panels, respectively.

4-105. Rappelling Rope Connectors.

Four rappel/air transport tiedown rings are installed in the cabin ceiling. Each ring is capable of supporting 10,000 pounds.

4-106. Fast Rope Insertion and Extraction System.

WARNING

Personnel carried externally are subject to injury from exposure to wind chilling, dehydration, difficult breathing conditions, and foreign objects.

Flight path, formation, and landing clearance distances must be expanded to account for rope length. Rope length shall be confirmed before each mission.

All rope ends shall be secured away from rotors during landing. This applies to both ropes hanging from the aircraft and ropes dropped to the ground in the landing area.

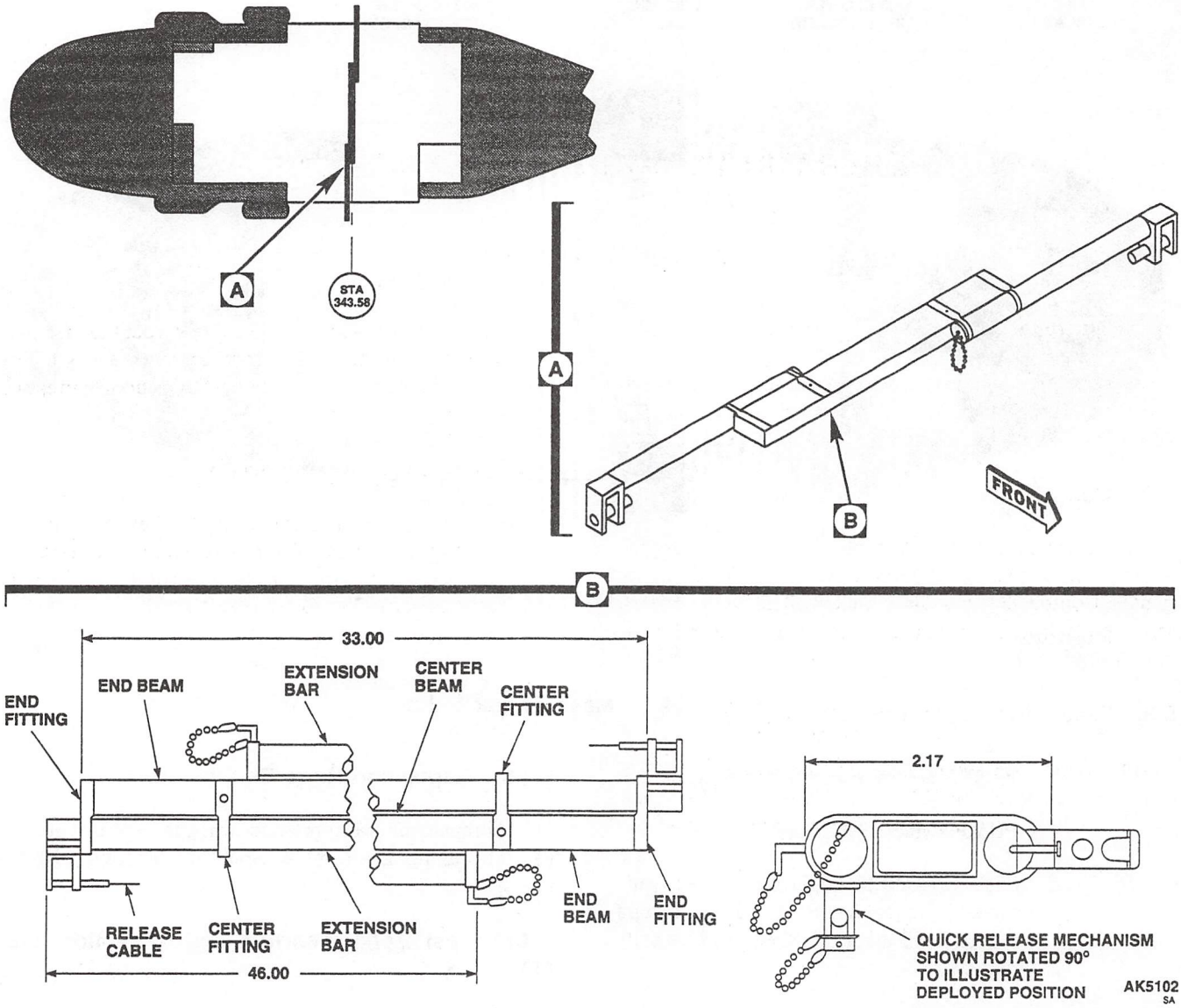

Figure 4-29. Fast Rope Insertion and Extraction System

CAUTION

Extend beams prior to using the FRIES for infiltration. The FRIES shall be used in the mid position for extraction.

Check rope attach/release mechanism to assure that the rope retention bar is secured with safety pin is installed prior to using FRIES for insertion or extraction.

The fast rope insertion and extraction system (FRIES) is a mechanical system that uses two fast ropes to provide rapid insertion of multiple troops and extraction of up to six soldiers per rope in areas not suitable for helicopter landings due to terrian obstructions or threat conditions (Figure 4-29). Maximum load limit for either side on the FRIES is 1500 pounds. With loads on the FRIES, maximum airspeed is limited to 80 KIAS, pitch and bank angles are limited to 30 degrees. FRIES operations are prohibited during icing conditions and when tubulence exceed the low conditon level.

CHAPTER 5
OPERATING LIMITS AND RESTRICTIONS

Section I GENERAL

5-1. Purpose.

This chapter identifies or refers to all important operating limits and restrictions that shall be observed during ground and flight operations.

5-2. General.

The operating limitations set forth in this chapter are the direct results of design analysis, tests, and operating experiences. Compliance with these limits will allow the pilot to safely perform the assigned missions and to derive maximum use from the aircraft.

5-3. Exceeding Operational Limits.

Any time an operational limit is exceeded an appropriate entry shall be made on DA Form 2408-13-1. Entry shall state what limit or limits were exceeded, range, time beyond limits, and any additional data that would aid maintenance personnel in the maintenance action that may be required. The helicopter shall not be flown until corrective action is taken.

5-4. Minimum Crew Requirements.

The minimum crew required to fly the helicopter is two pilots. Additional crewmembers as required will be added at the discretion of the commander, in accordance with pertinent Department of the Army regulations.

Section II SYSTEM LIMITS

5-5. Instrument Markings.

5-6. Instrument Marking Color Codes.

Operating limitations are shown as colored strips on the instrument face plate or placard with system/indicator limits (Figure 5-1). RED markings indicate the limit above or below which continued operation is likely to cause damage or shorten component life. GREEN markings indicate the safe or normal range of operation. YELLOW markings indicate the range when special attention should be given to the operation covered by the instrument. When a number value enters the YELLOW or RED range, it is enclosed within a box. Any flashing color indicator (pointer, number, or box) means that the data provided to the indicator is invalid.

5-7. MFDs Color Codes.

Limits on monochrome and color MFDs are identified by reverse video or color changes. Green indicates normal operating range for all MFDs. Reverse video is used for caution or out-of-limit indications on monochrome MFDs. Colors are used for caution or out-of-limit indications on color MFDs. However, when color MFDs are in the NVG mode, reverse video is used for caution or out-of-limit indications. Color MFD displays caution ranges in yellow and out-of-limit conditions in red.

5-8. Rotor Limitations.

It is not abnormal to observe a split between NP 1 and NP 2 speed during autorotational descent when the engines are fully decoupled from the main rotor. A speed increase of one engine from 100% NP to 103% NP maximum can be expected. During power recovery, it is normal for the engine operating above 100% NP to lead the other engine. Refer to Figure 5-2 for limitations.

5-9. Rotor Brake Operating Limits.

Rotor brake shall not be applied with engines operating and rotor turning except during an emergency stop. Routine stops will be with engines off and rotor brake pressure at a minimum of 180 psi to extend rotor brake life and NR between 30% to 50%. Maximum NR for emergency rotor brake application is 76% NR.

5-10. Rotor Start and Stop Limits.

Maximum wind velocity for rotor start or stop is 45 knots from any direction.

5-11. Rotor Speed Limitations.

Refer to Figure 5-2 for rotor limitations.

5-12. Main Transmission Module Limitations.

a. Oil pressure fluctuations should not occur during steady state forward flight or in a level hover. Momentary fluctuations in oil press may occur during transient maneuvers (i.e., in gusty wind conditions). Pitch attitude above 6° will cause pressure fluctuations. Those fluctuations including momentary drops into the yellow range (below 30 psi) are acceptable (Figure 5-3). Oil pressure should remain in the 50 to 60 psi range for most conditions. If fluctuations occur in steady state or main gearbox pressure remains below 50 psi, make an entry on DA Form 2408-13-1.

b. A demand for maximum power from engines with different engine torque factors (ETF) will cause a torque split when the low ETF engine reaches TGT limiting. This torque split is normal. Under these circumstances, the high power engine may exceed the dual engine limit. (Example: #1 TQ = 96% at TGT limiting, #2 TQ is allowed to go up to 104%. Total aircraft torque = (96% + 104% ÷ 2) = 100%.

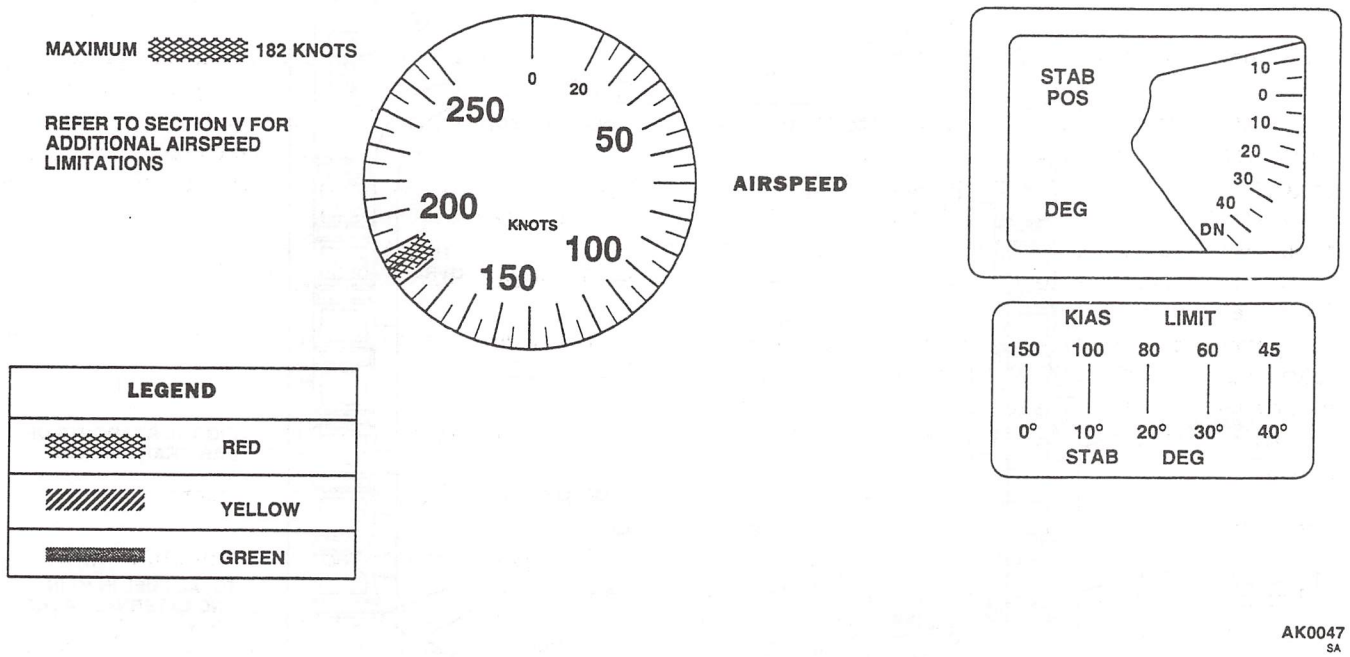

Figure 5-1. Instrument Marking

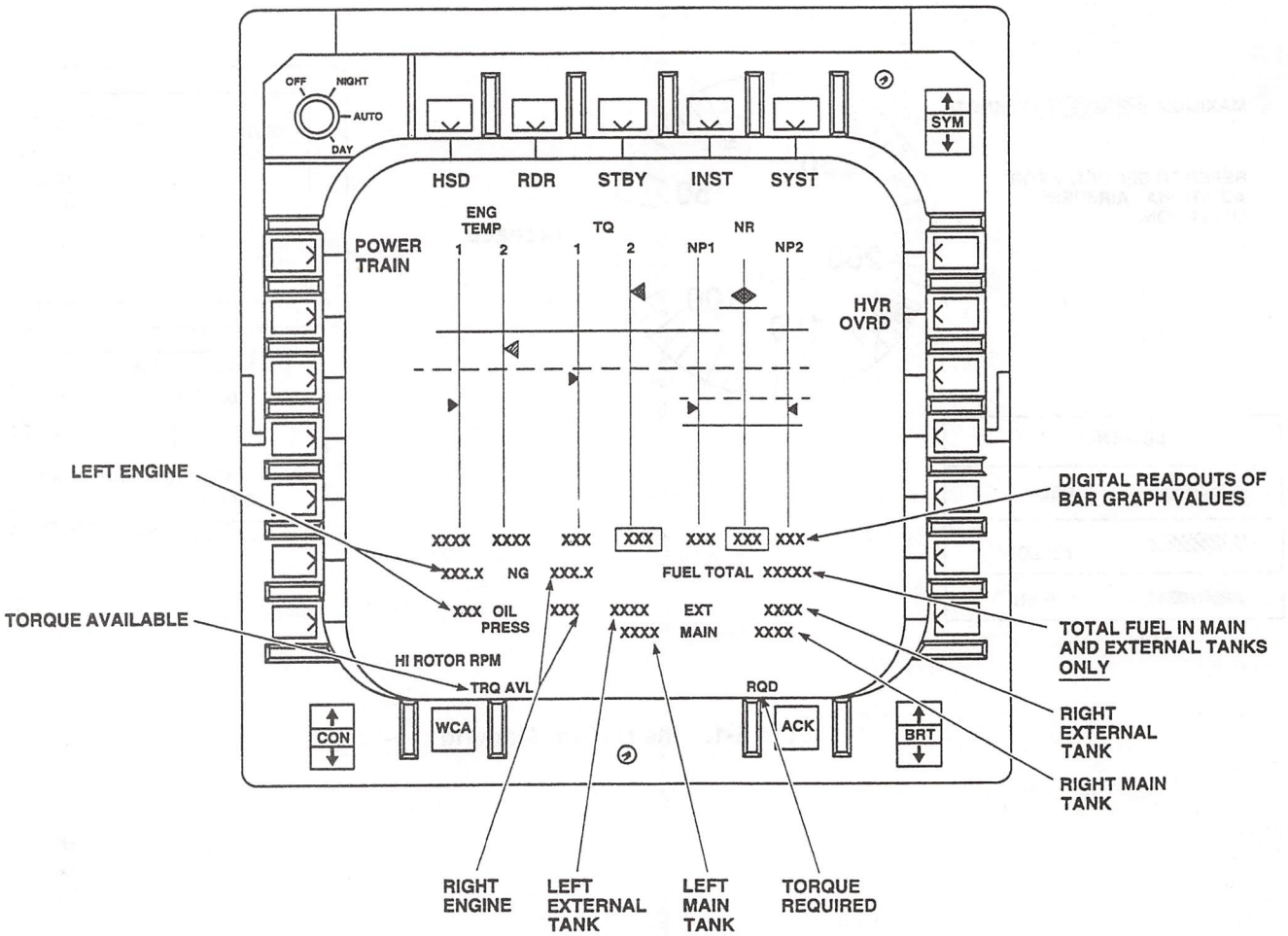

AK0037_1
SA

Figure 5-2. Engine Instrument Displays (Sheet 1 of 4)

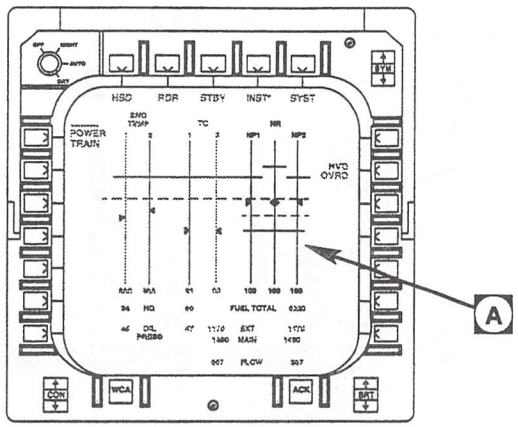

MAIN ROTOR % NR

POWER ON	
TRANSIENT	101% – 107%
CONTINUOUS	95% – 101%
MINIMUM EXCEPT FOR IDLE AND TRANSIENT	91%
POWER OFF (AUTOROTATION)	
MAXIMUM	110%
TRANSIENT	105% – 110%
NORMAL	90% – 105%
ENGINE % NP1–2	
12 SECOND TRANSIENT	105% – 107%
TRANSIENT	101% – 105%
CONTINUOUS	95% – 101%
MINIMUM EXCEPT FOR IDLE AND TRANSIENT	91%

AVOID OPERATION IN 20%–40% AND 60%–90% RANGE EXCEPT DURING START AND SHUT DOWN

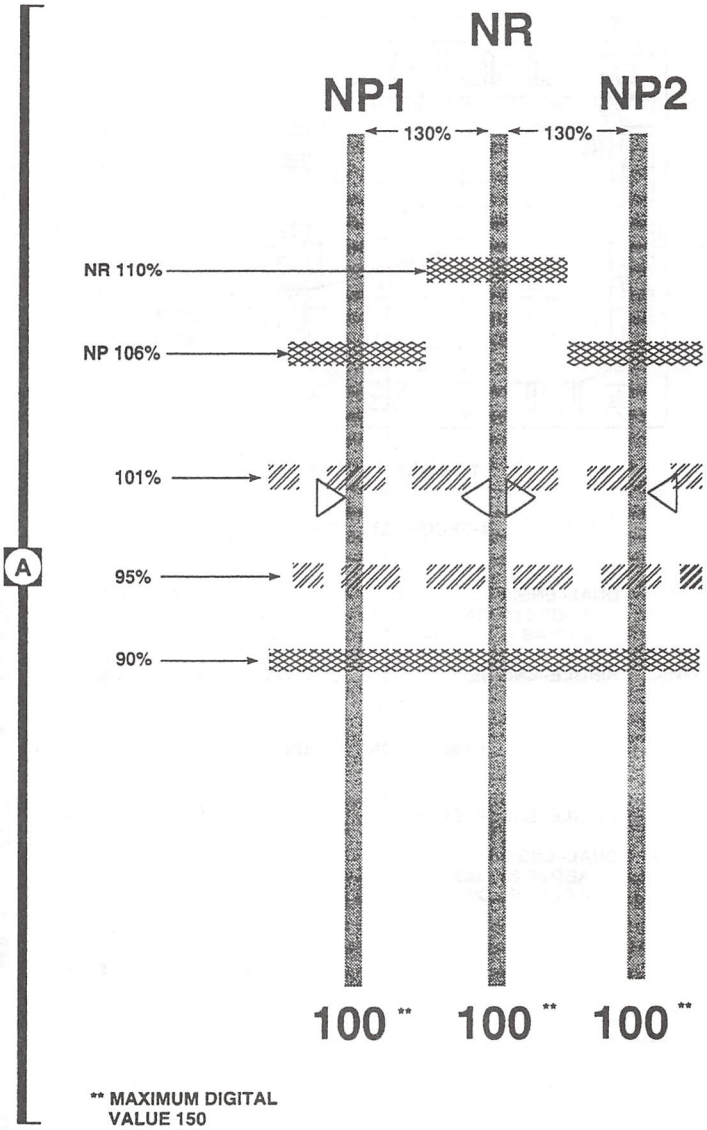

** MAXIMUM DIGITAL VALUE 150

LEGEND					
COLOR CODE	SYMBOLS		MFDS		NVG MODE
	POINTERS	BOX	COLOR	MONOCHROME	ALL MEDS
		XXX	RED	REVERSE VIDEO	REVERSE VIDEO
		XXX	YELLOW	REVERSE VIDEO	REVERSE VIDEO
		XXX *	GREEN	GREEN * (UNFILLED ▷)	GREEN * (UNFILLED ▷)

* SYMBOL AND NUMBERS SMALLER (BOX WILL BE MISSING)

AK0037_2
SA

Figure 5-2. Engine Instrument Displays (Sheet 2 of 4)

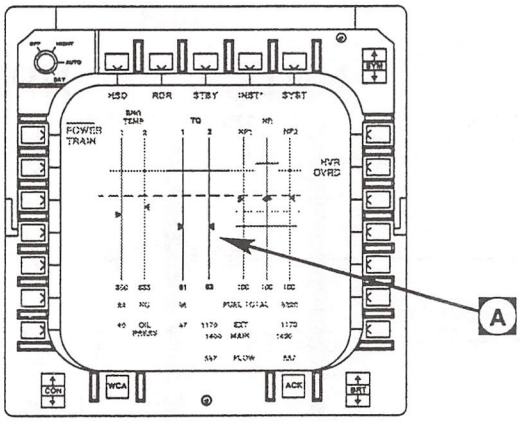

TORQUE LIMITS

10–SECOND TRANSIENT

DUAL–ENGINE	
ABOVE 80 KIAS	100% – 144%
80 KIAS OR BELOW	120% – 144%
SINGLE–ENGINE	135% – 144%

MAXIMUM CONTINUOUS

SINGLE–ENGINE ONLY	0% – 135%
DUAL–ENGINE	
ABOVE 80 KIAS	0% – 100%
AT OR BELOW 80 KIAS	0% – 120%

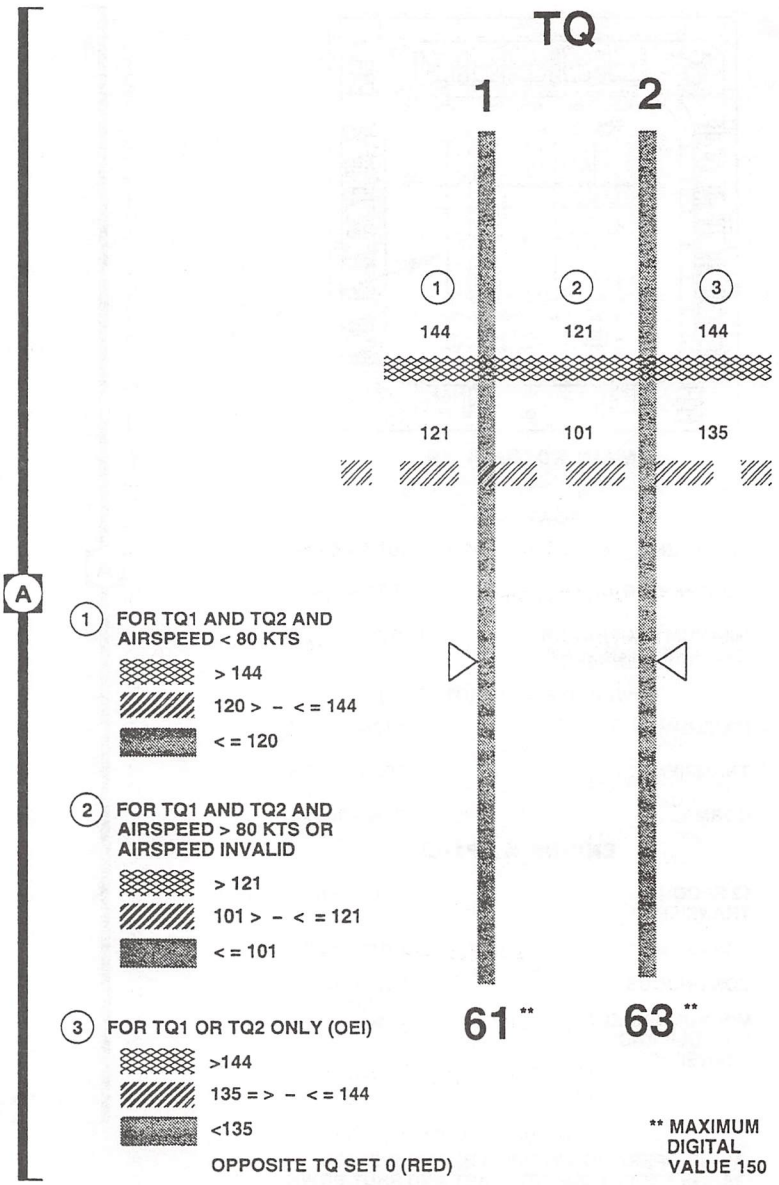

LEGEND					
COLOR CODE	SYMBOLS		MFDS		NVG MODE
	POINTERS	BOX	COLOR	MONOCHROME	ALL MEDS
		XXX	RED	REVERSE VIDEO	REVERSE VIDEO
		XXX	YELLOW	REVERSE VIDEO	REVERSE VIDEO
		XXX *	GREEN	GREEN * (UNFILLED ▷)	GREEN * (UNFILLED ▷)

* SYMBOL AND NUMBERS SMALLER (BOX WILL BE MISSING)

AK0037_3
SA

Figure 5-2. Engine Instrument Displays (Sheet 3 of 4)

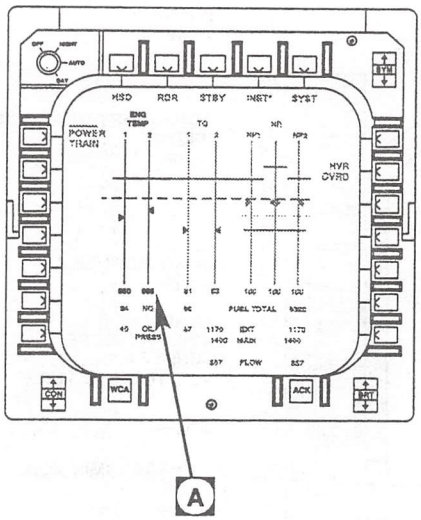

TURBINE GAS TEMPERATURE LIMITS

10 SECOND TRANSIENT	903° – 949°C***
2.5 MINUTES (CONTINGENCY POWER)	878° – 903°C
START ABORT LIMIT	851°C
10–MINUTE LIMIT	851° – 878°C
30–MINUTE LIMIT	810° – 851°C
NORMAL	0° – 810°C

ENGINE NG

12–SECOND TRANSIENT	105%
30–MINUTE LIMIT	99%–102%
CONTINUOUS	0%–99%

*** APPLICABLE IF GAS GENERATOR SPEED IS 70% OR ABOVE, OTHERWISE 851°C

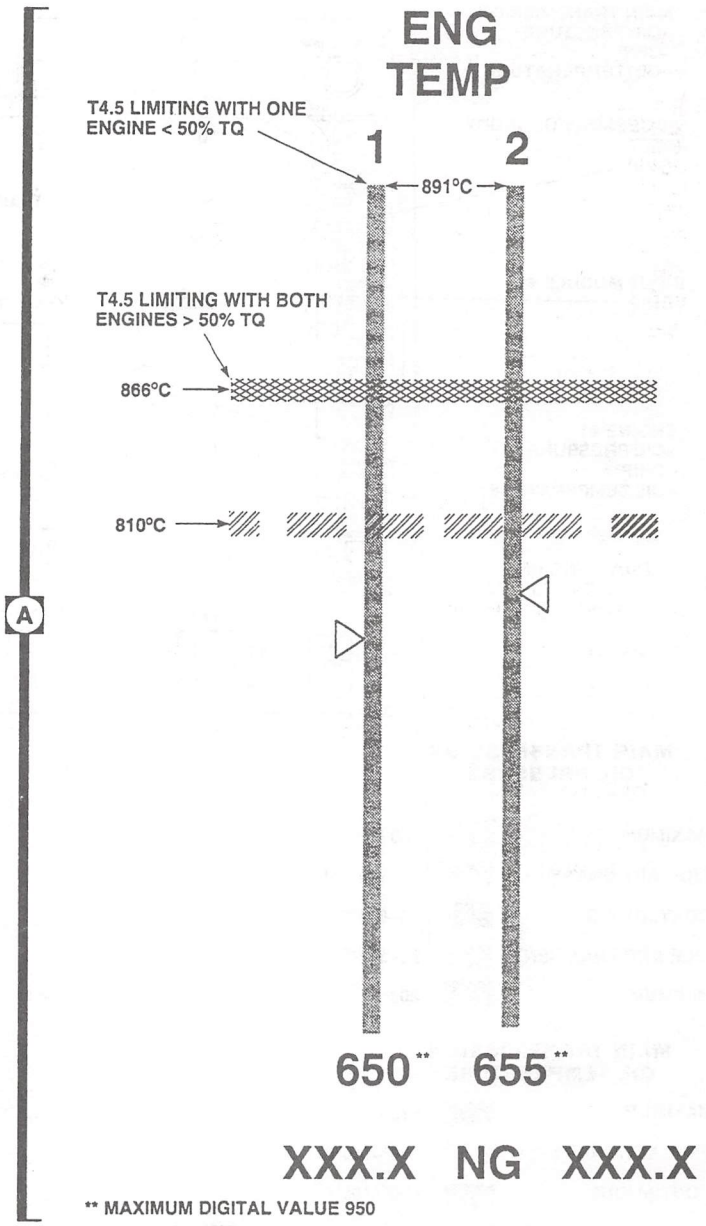

** MAXIMUM DIGITAL VALUE 950

LEGEND					
COLOR CODE	SYMBOLS		MFDS		NVG MODE
	POINTERS	BOX	COLOR	MONOCHROME	ALL MEDS
		XXX	RED	REVERSE VIDEO	REVERSE VIDEO
		XXX	YELLOW	REVERSE VIDEO	REVERSE VIDEO
		XXX *	GREEN	GREEN * (UNFILLED ▷)	GREEN * (UNFILLED ▷)

* SYMBOL AND NUMBERS SMALLER (BOX WILL BE MISSING)

AK0037_4 SA

Figure 5-2. Engine Instrument Displays (Sheet 4 of 4)

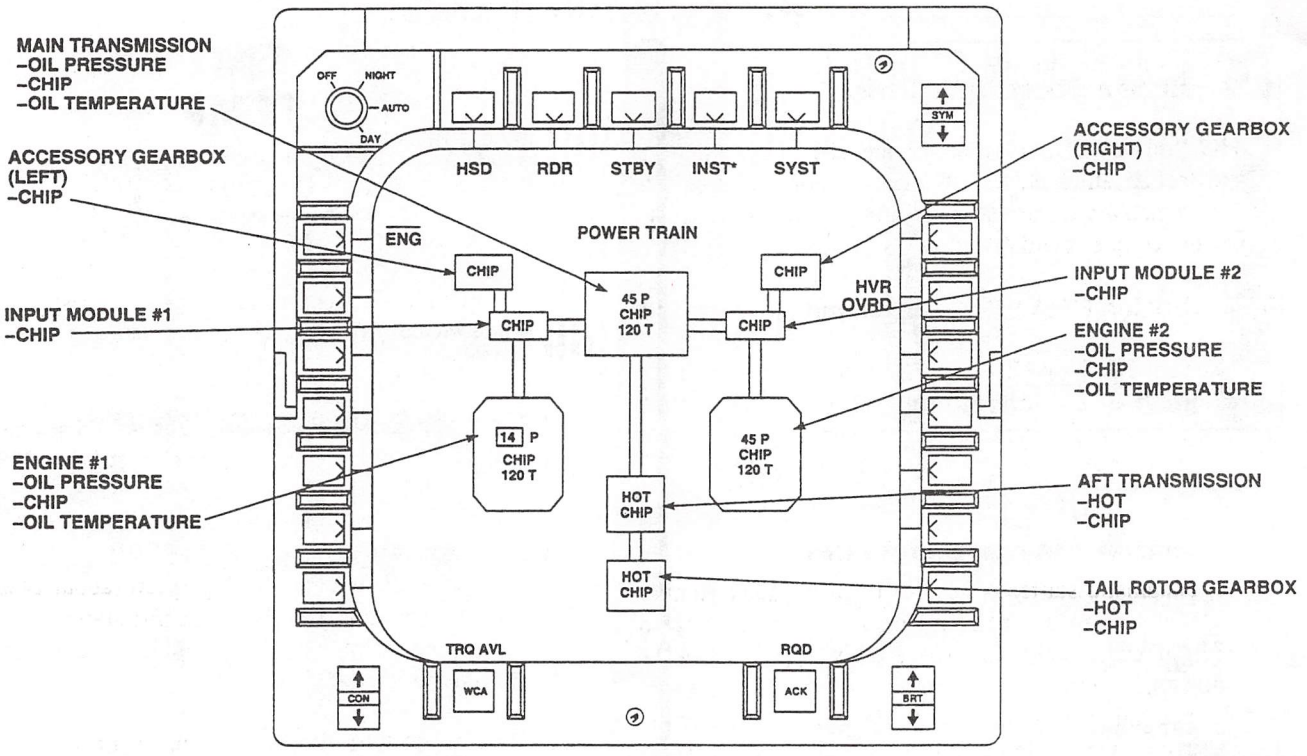

MAIN TRANSMISSION OIL PRESSURE

MAXIMUM	130 PSI
PRECAUTIONARY	65–130 PSI
CONTINUOUS	30–65 PSI
IDLE AND TRANSIENT	20–30 PSI
MINIMUM	20 PSI

ENGINE OIL PRESSURE

MAXIMUM	120 PSI
5–MINUTE LIMIT	100–120 PSI
NORMAL OPERATION	26–100 PSI
IDLE	22–26 PSI
MINIMUM	22 PSI

MAIN TRANSMISSION OIL TEMPERATURE

MAXIMUM	140°C
PRECAUTIONARY	105°–140°C
CONTINUOUS	–50°–105°C

ENGINE OIL TEMPERATURE

MAXIMUM	150°C
30–MINUTE LIMIT	135–150°C
CONTINUOUS	–50–135°C

LEGEND

COLOR CODE	SYMBOLS	MFDS		NVG MODE
	BOX	COLOR	MONOCHROME	ALL MEDS
	XXX	RED	REVERSE VIDEO	REVERSE VIDEO
	XXX	YELLOW	REVERSE VIDEO	REVERSE VIDEO
	XXX	GREEN	GREEN	GREEN

NOTES:

CHIPS WILL ILLUMINATE IN RED
L1 (ENG) KEY – PRESS TO DISPLAY ENGINE INSTRUMENTS PAGE

AK0049
SA

Figure 5-3. Powertrain Chip, Temperature, and Pressure Display

Section III POWER LIMITS

5-13. Engine Power Limitations.

The limitations in Figure 5-2 are absolute limitations regardless of atmospheric conditions. For variations in power available with temperature and pressure altitude, refer to the Torque Available chart in Chapter 7.

5-14. Engine RPM (NP Speed) Limitations.

Transient NP 1 or NP 2 operation in the yellow range (101% - 105%) is not recommended as good operating practice. However, no damage to either engine or drive train is incurred by operation within this range.

5-15. Engine Starter Limits.

The pneumatic starter is capable of making the number of consecutive start cycles listed below, when exposed to the environmental conditions specified, with an interval of at least 60 seconds between the completion of one cycle and the beginning of the next cycle. A starting cycle is the interval from start initiation and acceleration of the compressor, from zero rpm, to starter dropout. The 60-second delay between start attempts applies when the first attempt is aborted for any reason, and it applies regardless of the duration of the first attempt. If motoring is required for an emergency, the 60-second delay does not apply.

a. At ambient temperatures below 16°C (61°F), two consecutive start cycles may be made, followed by a 3-minute rest period, followed by two additional consecutive start cycles. A 30-minute rest period is then required before any additional starts.

b. At ambient temperatures of 16°C to 52°C (61°F to 126°F), two consecutive start cycles may be made. A 30-minute rest period is then required before any additional start cycles.

5-16. Pneumatic Source Inlet Limits.

The minimum ground air source (pneumatic) required to start the helicopter engines is 40 psig and 30 ppm at 149°C (300°F). The maximum ground air source to be applied to the helicopter is 50 psig at 249°C (480°F), measured at the external air connector on the fuselage.

5-17. Engine Start Limits.

CAUTION

Engine start attempts at or above a pressure altitude of 18,000 feet could result in a Hot Start.

Crossbleed starts shall not be attempted unless the anti-ice light is off, and operating engine must be at 90% NG Speed and rotor speed at 100% NR. When attempting single-engine starts at pressure altitudes above 14,000 feet, press the start switch with the ENG POWER CONT lever OFF, until the maximum motoring speed (about 24% NG) is reached, before going to IDLE. Engine starts using APU source may be attempted when within the range of FAT and pressure altitude of Figure 5-4.

5-18. Engine Overspeed Check Limitations.

Engine overspeed check in flight is prohibited. Engine overspeed checks on the ground are authorized by designated maintenance personnel and designated instructor pilots conducting transition training.

5-19. Hot Fuel Limitations.

When an aircraft operating on JP-4 is restarted within 2 hours of an engine shutdown and air temperature is above 21°C (70°F), a minimum of 2 minutes of two engine ground operation at 100% NR is required prior to takeoff to purge possible hot fuel from engine nacelle area. When using JP-4 with engines on, both fuel boost pumps shall be on and operating; otherwise, engine flameout may result.

DATA BASIS: CALCULATED

EXAMPLE

WANTED

IF TWO-ENGINE START CAN BE DONE AT 2900 FEET PRESSURE ALTITUDE AND 16°C

KNOWN

PRESSURE ALTITUDE = 2900 FEET
FREE-AIR TEMPERATURE = 16°C

METHOD

ENTER CHART AT PRESSURE ALTITUDE 2900 FEET
MOVE RIGHT TO INTERSECT VERTICAL TEMPERATURE LINE.
ENTER CHART AT 16 °C
MOVE UP TO INTERSECT HORIZONTAL PRESSURE ALTITUDE LINE.
IF LINES INTERSECT WITHIN DARK SHADED AREA, TWO-ENGINE START CAN BE DONE.

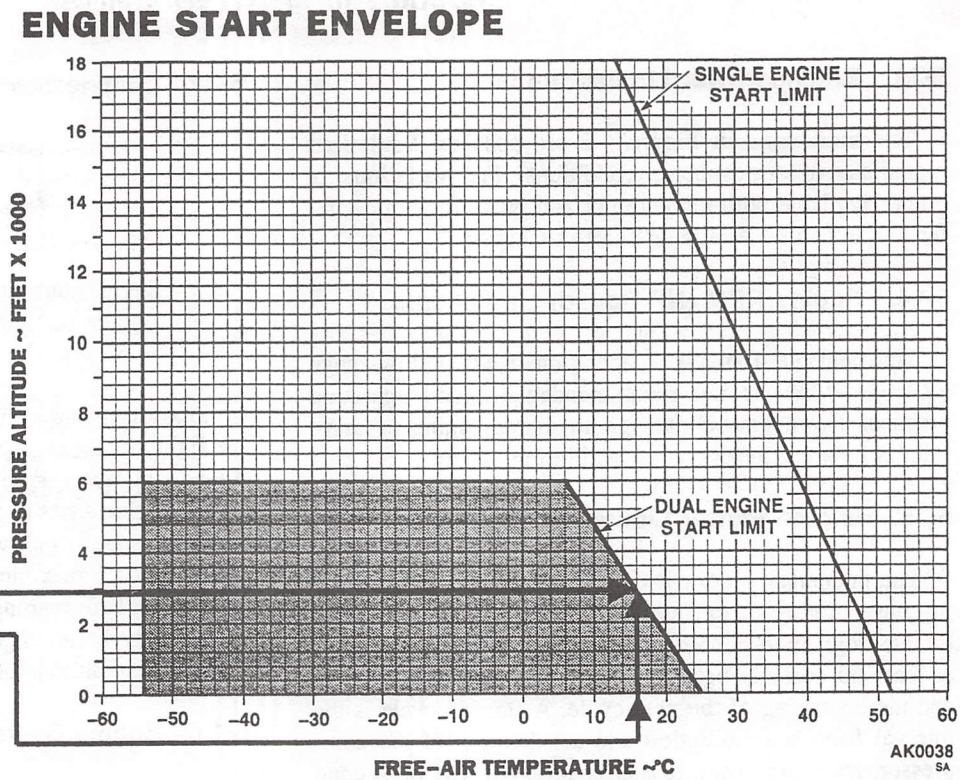

Figure 5-4. Engine Start Envelope

Section IV LOADING LIMITS

5-20. Center of Gravity Limitations.

Center of gravity limits for the aircraft to which this manual applies and instructions for computation of the center of gravity are contained in Chapter 6.

5-21. Weight Limitations.

The maximum gross weight of the helicopter is 24,500 pounds. In addition to the gross weight, maximum weights are further limited by the cargo floor load bearing capacity which is a maximum of 300 pounds-per-square foot.

5-22. Cabin Ceiling Tiedown Fittings.

The four cabin ceiling tiedown fittings have a load limit of 4,000 pounds.

5-23. Cargo Hook Weight Limitation.

The maximum weight that may be suspended from the cargo hook is limited to 8,000 pounds.

5-24. Rescue Hoist Weight Limitations.

The maximum weight that may be suspended from the rescue hoist is 600 pounds.

5-25. FRIES Weight Limitations.

The maximum weight that may be suspended on either side of the FRIES is 1500 pounds.

Section V AIRSPEED LIMITS

5-26. Airspeed Operating Limits.

The airspeed operating limits chart (Figure 5-5) defines maximum permitted airspeed (Vne) as a function of altitude, temperature, and gross weight. The airspeed for onset of blade stall chart (Figure 5-6) defines the airspeed where blade stall can be encountered. Additional airspeed limits not shown on the chart are:

a. Maximum airspeed for one engine inoperative is 130 KIAS.

b. Maximum airspeed for autorotation at a gross weight of 16,825 pounds or less is 150 KIAS.

c. Maximum airspeed for autorotation at a gross weight of greater than 16,825 pounds is 130 KIAS, or the level flight Vh for the ambient conditions, whichever is lower.

d. Maximum sideward/rearward flight is 45 knots in a no wind condition. Hovering in winds greater than 45 knots from the sides or rear is prohibited. Sideward/Rearward flight into the wind, when combined with windspeed, shall not exceed 45 knots.

e. SAS inoperative airspeed limits:

(1) One SAS inoperative - 170 KIAS.

(2) Two SAS inoperative - 150 KIAS.

(3) Two SAS inoperative in IMC - 140 KIAS.

f. Hydraulic system inoperative limits:

(1) One hydraulic system inoperative - 170 KIAS.

(2) Two hydraulic systems inoperative - 150 KIAS.

(3) Two hydraulic systems inoperative in IMC - 140 KIAS.

g. Controllable searchlights and landing light airspeed limits.

(1) Landing light. If use is required, the landing light must be extended prior to reaching a maximum forward airspeed of 130 KIAS. With landing light extended, airspeed is limited to 180 KIAS.

(2) Searchlights. If use is required, the searchlight(s) must be extended prior to reaching a maximum forward airspeed of 100 KIAS. With searchlight(s) extended, airspeed is limited to 180 KIAS.

h. Airspeeds greater than 80 KIAS with loads on the FRIES is prohibited.

5-27. Blade Stall Chart.

The blade stall chart (Figure 5-6) represents speeds at which stall begins to occur on the retreating blade tip. At these speeds, reasonable maneuvers or mild turbulence can be tolerated. Increased airspeed, severe turbulence, or abrupt control maneuvers at or near these speeds will increase the severity of the stall and the helicopter will become more difficult to control. Fully developed blade stall will be accompanied by heavy four-per-rev vibrations and loss of altitude. Cyclic control will be less responsive. Recovery is accompanied by reducing the collective and/or reducing the severity (usually pitch rate) of the maneuver. This will result in still further short term loss of altitude.

5-28. Flight with Cabin Door(s)/Window(s) Open.

The following airspeed limitations are for operating the helicopter in forward flight with the cabin doors/window open:

a. Cabin doors

(1) The doors will not be intentionally moved from the fully open or closed position in flight. The cabin doors may be opened or closed during hover flight. The cabin doors must be closed or fully opened and latched before forward flight. Should the door inadvertently open in flight, it may be secured fully open or closed.

(2) Cabin doors may be fully open up to 100 KIAS with soundproofing installed after station 379.

(3) Cabin doors may be fully open up to 145 KIAS with soundproofing removed aft of station 379 or with soundproofing secured properly.

b. Gunner's window(s) may be fully open up to 170 KIAS.

c. Cockpit doors sliding window will not be opened or closed during flight except during hover.

AIRSPEED OPERATING LIMITATIONS
CLEAN CONFIGURATION 100% NR

EXAMPLE

WANTED

MAX IAS FOR VARIOUS TEMPERATURES, PRESSURE ALTITUDE, AND GROSS WEIGHTS

KNOWN

FAT = –20°C
PRESSURE ALTITUDE = 6000 FT
GROSS WEIGHT = 18000 LBS

METHOD

ENTER FAT AT –20°C
MOVE RIGHT TO PRESSURE ALTITUDE 6000 FT
MOVE DOWN TO 18000 LBS GROSS WEIGHT. NOTE THAT SPEED AT INTERSECTION OF GROSS WEIGHT LINE DOES NOT EXCEED MACH LIMIT LINE AT GIVEN FAT.
MOVE LEFT TO READ IAS = 181 KIAS

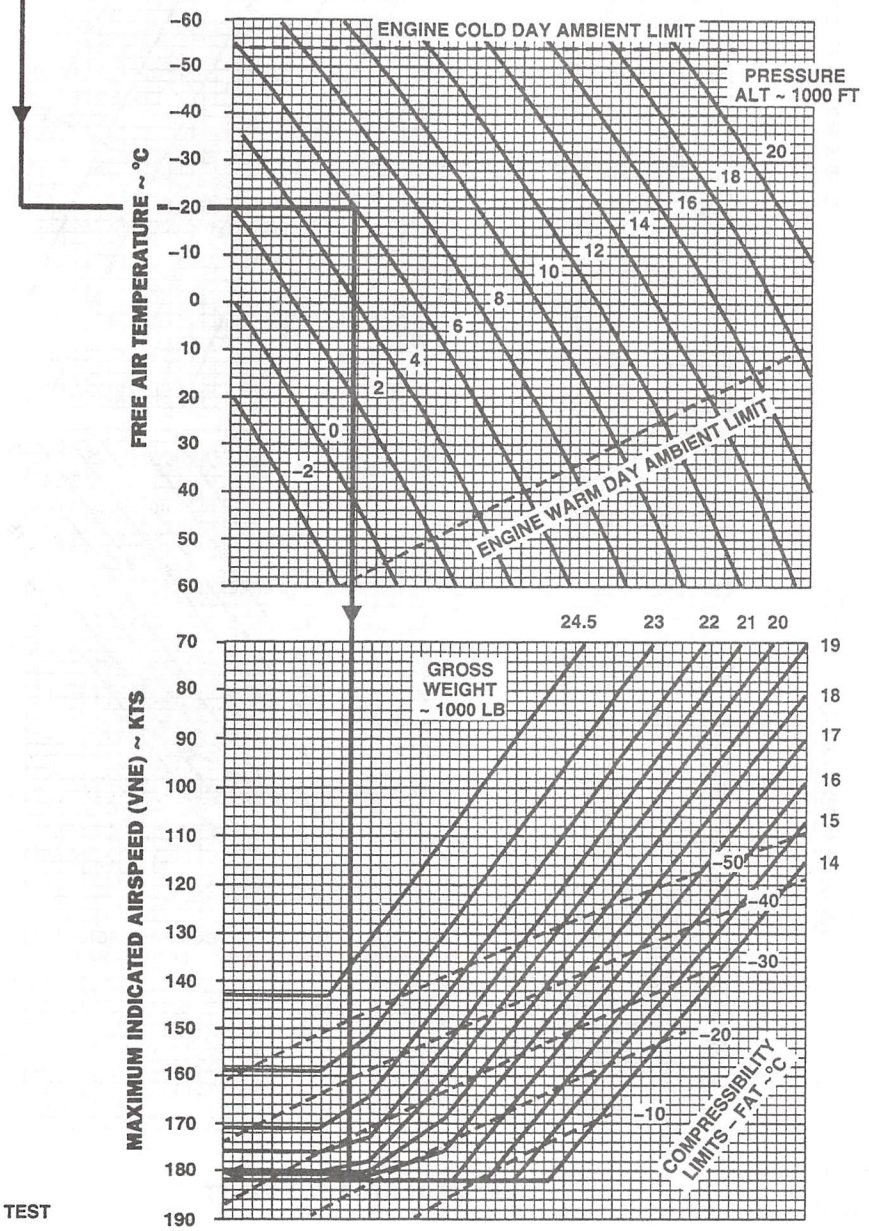

DATA BASIS: FLIGHT TEST

AK0347_1 SA

Figure 5-5. Airspeed Operating Limits (Sheet 1 of 2)

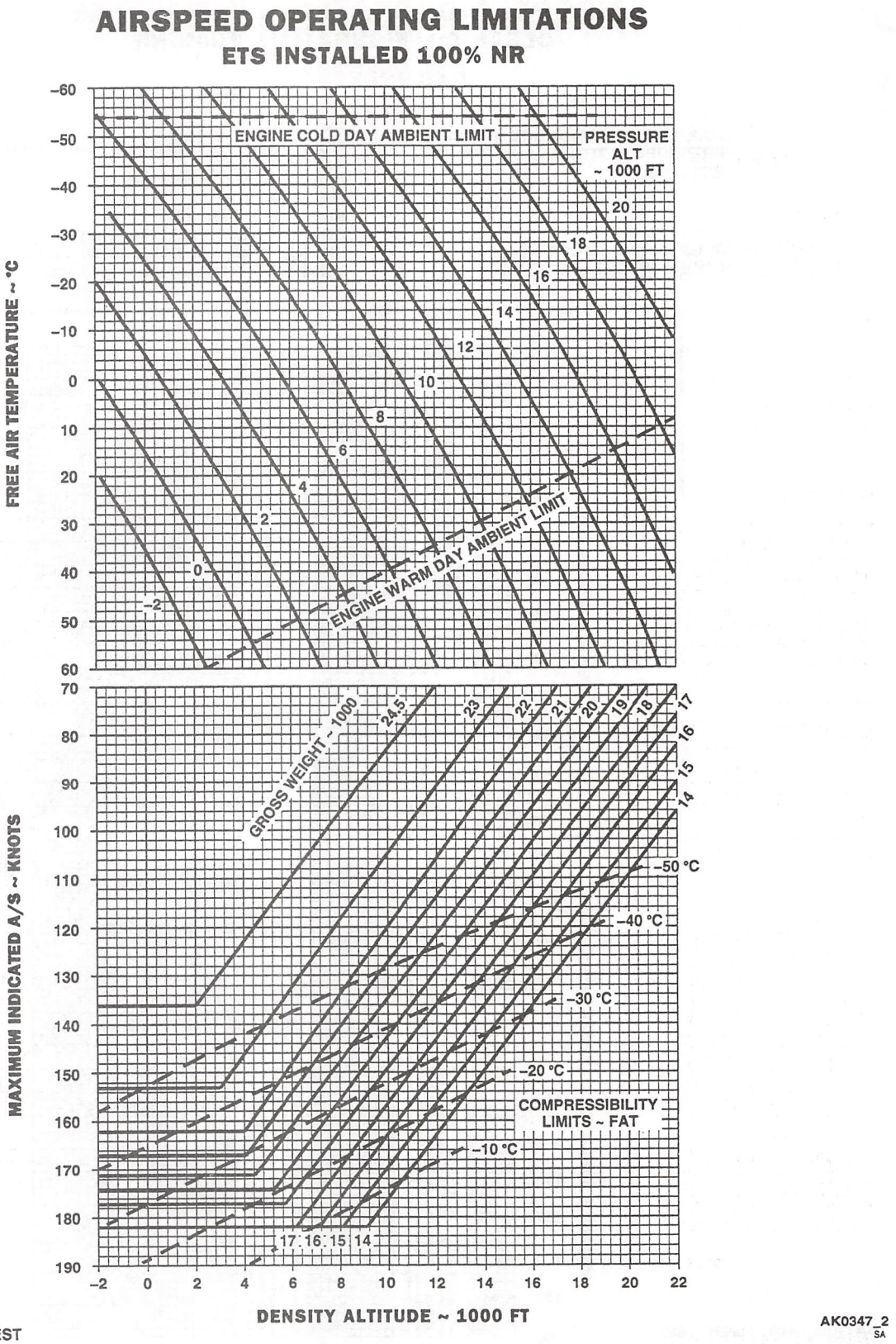

DATA BASIS: FLIGHT TEST

Figure 5-5. Airspeed Operating Limits (Sheet 2 of 2)

AIRSPEED FOR ONSET OF BLADE STALL

LEVEL FLIGHT 100% NR

EXAMPLE

WANTED

MAX RECOMMENDED AIRSPEED FOR KNOWN ANGLE OF BANK

KNOWN

FAT = 20 °C
PRESSURE ALTITUDE = 5,000 FEET.
GROSS WEIGHT = 23,000 POUNDS
ANGLE OF BANK = 20 DEGREES

METHOD

ENTER PRESSURE ALTITUDE AT 5,000 FEET. MOVE RIGHT TO 20 DEGREES FAT. MOVE DOWN TO GROSS WEIGHT 23,000 POUNDS. MOVE LEFT TO 20 DEGREES ANGLE OF BANK. MOVE VERTICALLY DOWN TO READ INDICATED AIRSPEED OF 108 KNOTS.

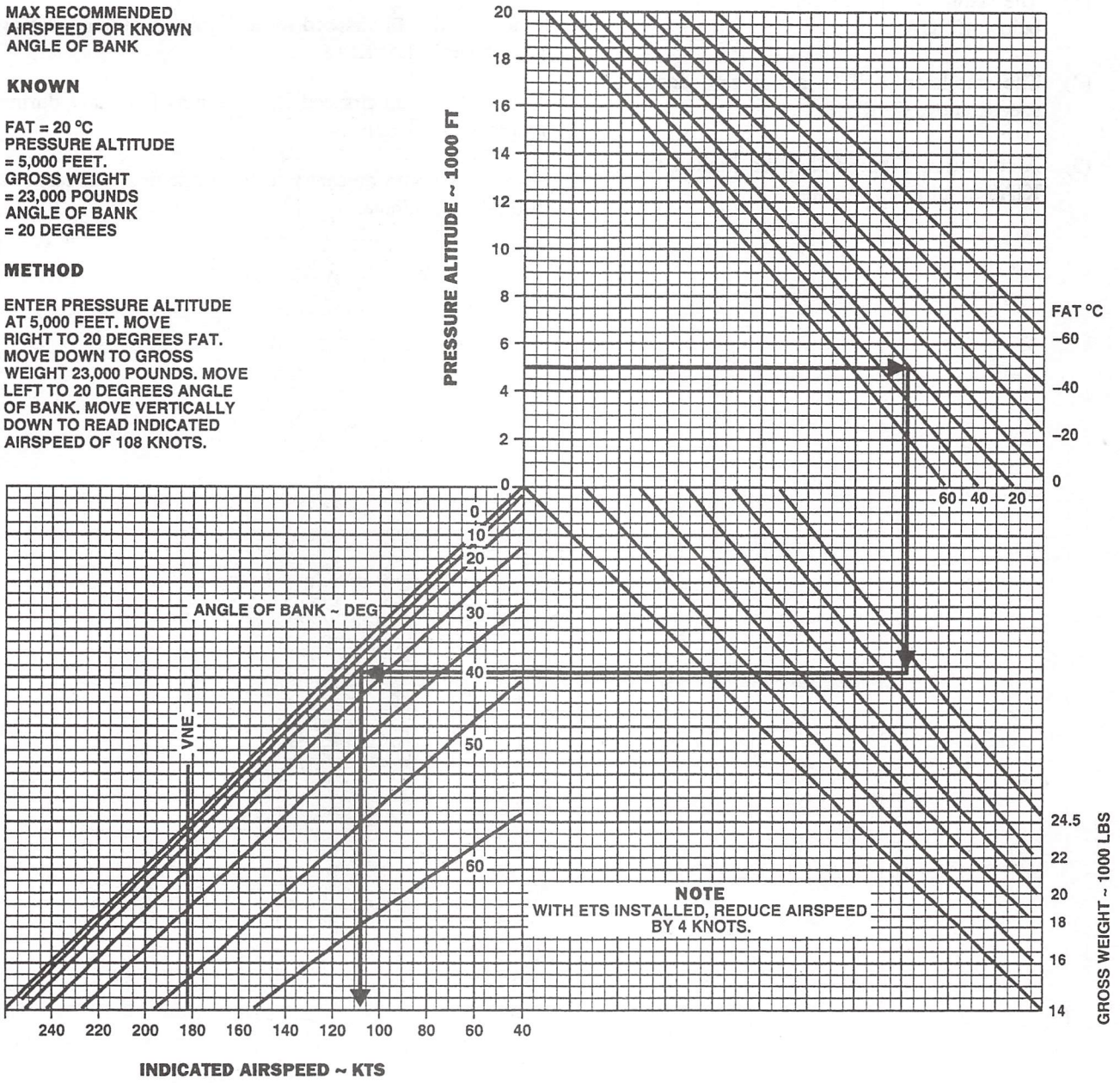

DATA BASIS: FLIGHT TEST

AK0147
SA

Figure 5-6. Airspeed for Onset of Blade Stall

d. Flight with one cockpit door removed is prohibited.

5-29. Airspeed Limitations Following Failure of the Automatic Stabilator Control System.

a. Manual control available. If the automatic stabilator control system fails in flight and operation cannot be restored:

(1) The stabilator shall be set full down at speeds below 40 KIAS.

(2) The stabilator shall be set at zero degree at speeds above 40 KIAS.

(3) Autorotation airspeed shall be limited to 120 KIAS at all gross weights.

b. Manual control not available. The placard airspeed limits shall be observed as not-to-exceed speed (powered flight and autorotation), except in no case shall the autorotation limit exceed 120 KIAS.

5-30. Jettison Limitations.

The following airspeeds and descent rate for jettisoning fuel tanks without or with various fuel levels are:

a. Maximum airspeed for jettisoning fuel tanks during level flight is 120 KIAS.

b. Maximum airspeed for jettisoning fuel tanks during a descent is 70 KIAS.

c. Maximum descent rate for jettisoning fuel tanks is 500 feet per minute.

Section VI MANEUVERING LIMITS

5-31. Prohibited Maneuvers.

a. Hovering turns greater than 30° per second are prohibited. Intentional maneuvers beyond attitudes of ±30° in pitch or ±60° in roll are prohibited.

b. Simultaneous moving of both ENG POWER CONT levers to IDLE or OFF (throttle chop) in flight is prohibited.

c. Rearward ground taxi is prohibited.

d. Sling load and rescue hoist maneuvering limitations are defined by Figure 5-7.

5-32. Restricted Maneuvers.

5-33. Manual Operation of the Stabilator.

Manual operation of the stabilator in flight is prohibited except as required by formal training requirements, or as alternate stabilator control in case the automatic mode malfunctions.

5-34. Downwind Hovering.

Prolonged rearward flight and downwind hovering are to be avoided to prevent accumulation of exhaust fumes in the helicopter and heat damage to windows on open cargo doors.

5-35. Maneuvering Limitations.

CAUTION

At heavy gross weights, the helicopter may be limited by blade stall prior to reaching structural limits.

The maneuvering limits of the helicopter, other than as limited by other paragraphs within this section, are always defined by main rotor blade stall. Stall has not been encountered in 1g flight up to the airspeeds shown in chart Figure 5-5. In maneuvering flight, stall will be accompanied by an increase in 4-per-rev vibration levels, which increase proportionately with the degree of stall. Maneuvering flight which results in a heavy stall that significantly increases 4-per-rev vibration levels is prohibited. At gross weights greater than 22,000 pounds, angle of bank is limited to 30°.

5-36. High Speed Yaw Maneuver Limitation.

Above 80 KIAS, avoid abrupt full pedal inputs to prevent excessive tail rotor system loading.

5-37. Limitations for Maneuvering With Sling Loads.

Maneuvering limitations with a sling load is limited to a maximum of 30° angle of bank in forward flight (Figure 5-7).

5-38. Limitations for Maneuvering With Rescue Hoist Loads.

Maneuvering limitations with a rescue hoist load is limited to maximum of 30° angle of bank in forward flight (Figure 5-7). Sideward flight is limited by bank angle and is decreased as airspeed is increased. Rearward flight with hoist load is limited to 35 knots. Rate of descent is limited to 1000 feet-per-minute.

5-39. Limitations for Maneuvering With FRIES Loads.

Maneuvering limitations with a FRIES load is limited to maximum of 30° in pitch and/or bank angles.

5-40. Bank Angle Limitation.

Bank angles shall be limited to 30° when a primary servo pressure low caution message is on.

5-41. Ground Taxiing Limitation.

CAUTION

When taxiing with aircraft gross weight within region B of Figure 5-8, adjust dual-engine torque to 25% or more to prevent ground contact with the TFU, landing gear wire cutter/deflector, and/or radio antennas.

Ground taxi maneuvers are limited by aircraft gross weight. At least 25% dual-engine torque shall be used when aircraft gross weight is within region B of Figure 5-8. Refer to Figure 2-3, Turning Radius and Clearance, for ground clearance to selected aircraft components.

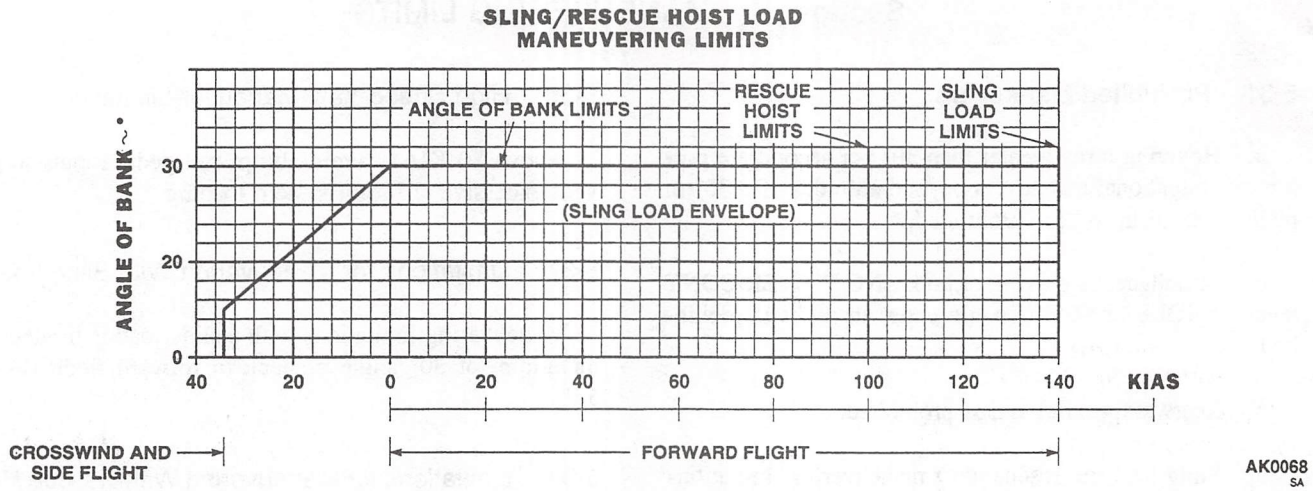

Figure 5-7. Sling/Hoist Load Maneuvering Limitations

5-42. Landing Gear Limitations.

CAUTION

When aircraft gross weight is within region B of Figure 5-8, landing on a surface in which the area beneath the aircraft is higher than the area in contact with the wheels should be avoided to prevent ground contact with the TFU, landing gear wire cutter/deflector, and/or radio antennas.

Sink rate in excess of those values in this paragraph may result in the antennas and FLIR turret on the bottom of the fuselage to contact the landing surface.

Do not exceed a touchdown sink rate of 540 feet-per-minute on level terrain and 360 feet-per-minute on slopes/rough terrain with gross weights of up to 16,825 pounds; above 16,825 pounds gross weight 300-feet-per-minute on level terrain and 180 feet-per-minute on slopes/rough terrain.

5-43. Landing Speed Limitations.

Maximum forward touchdown speed is limited to 60 knots ground speed on level terrain.

5-44. Slope Landing Limitations.

The following slope limitations apply regardless of gross weight or CG:

a. Maximum upslope landing is 2° with refueling probe extended (3° refuel probe retracted) and/or FLIR installed, and aircraft gross weight is within region B of Figure 5-8. Maximum upslope landing is 3° with refueling probe extended (5° refuel probe retracted) and/or FLIR installed, and aircraft gross weight is within region A of Figure 5-8. Right or left wheel upslope is limited to 15°. The slope limitations shall be further reduced by 2° for every 5 knots of wind.

b. Maximum downslope landing is 6°. During 6° nose downslope landings, downslope conditions with tail winds greater than 15 knots shall not be conducted. A low-frequency oscillation may occur when landing nose-down on a slope with the cyclic near the aft stop.

GROUND OPERATING ENVELOPE

REGION A:
NORMAL OPERATIONS

1. OLEO SERVICING 740 PSI MINIMUM.
2. DUAL ENGINE TORQUE LESS THAN 25%.
3. APPLY BRAKES SMOOTHLY AND MODERATELY (AVOID HARD BRAKING).

REGION B:
HIGH GROSS WEIGHT RESTRICTIONS

1. OLEO SERVICING 740 PSI MINIMUM.
2. CLEARANCE AVAILABLE PER FIGURE 2–3.
3. DUAL ENGINE TORQUE AT LEAST 25%.
4. KEEP AIRCRAFT SPEED SLOWER THAN A BRISK WALK.
5. APPLY BRAKES SMOOTHLY AND MODERATELY (AVOID HARD BRAKING).

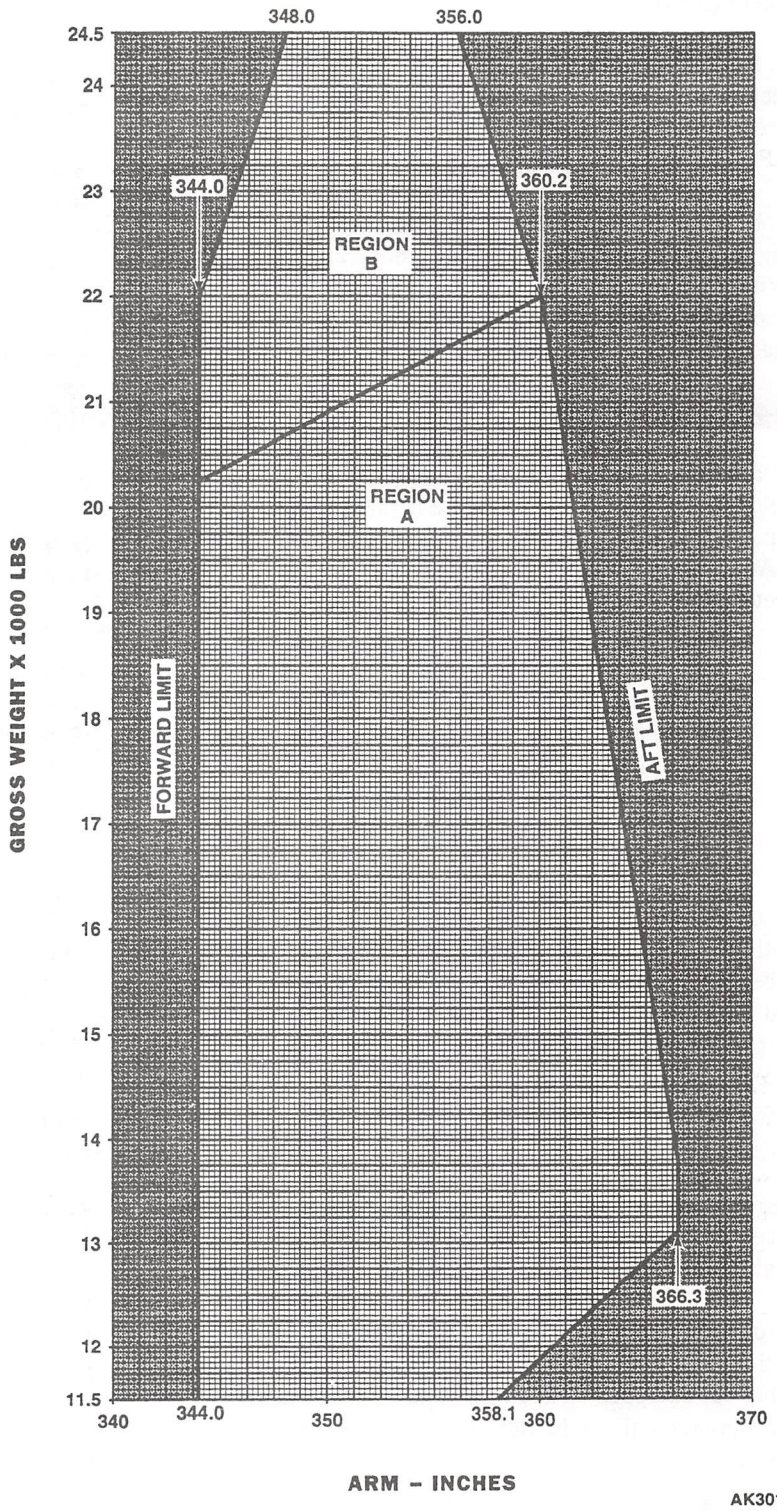

Figure 5-8. Interim Ground Operating Envelope

Section VII ENVIRONMENTAL RESTRICTIONS

5-45. Flight in Instrument Meteorological Conditions (IMC).

a. This aircraft is qualified for operation in instrument meteorological conditions. Normal configuration of the helicopter for IMC flight includes all components of the AFCS installed and properly operating.

b. The helicopter should not be scheduled for IMC flight if either AHRS or INU are inoperative. Should one system fail during flight, the flight may be continued. Should both systems fail during flight, a landing should be made as soon as practicable.

5-46. Flight in Icing Conditions.

a. When the ambient air temperature is 4°C (39°F) or below and visible liquid moisture is present, icing may occur. Icing severity is defined by the liquid water content (LWC) of the outside air and measured in grams per cubic meter (g/m^3).

(1) Trace - LWC 0 to 0.25 g/m^3

(2) Light - LWC 0.25 to 0.5 g/m^3

(3) Moderate - LWC 0.5 to 1.0 g/m^3

(4) Heavy - LWC greater than 1.0 g/m^3

b. Helicopters equipped with operational engine inlet anti-ice modulating valve and insulated ambient air sensing tube, but not equipped with blade deice system are permitted flight into forecast or known trace icing conditions. Flight into forecast or known light icing conditions is not recommended. Flight into forecast or known moderate or more severe icing conditions is prohibited.

c. Helicopters equipped with operational engine inlet anti-ice modulating valve, insulated ambient air sensing tube, and operational blade deice system are permitted flight into forecast or known moderate icing conditions.

d. Helicopters equipped with operational engine inlet anti-ice modulating valve and insulated ambient air sensing tube, but equipped with an inoperative blade deice system are permitted flight in the conditions as described in b. above.

e. All other anti-ice equipment (i.e., windshield anti-ice, pitot heat, engine anti-ice) shall be installed and operational before flight into known or forecasted icing conditions.

f. Flight into known or forecasted icing conditions with personnel on the FRIES is prohibited.

5-47. Engine and Engine Inlet Anti-Ice Limitations.

At engine power levels of 10% TQ per engine and below, full anti-ice capability cannot be provided, due to engine bleed limitations. Avoid operation under conditions of extreme low power requirements such as high rate of descent (1900 fpm or greater), or ground operation below 100% NR, during icing conditions. The cabin heating system should be turned off before initiating a high rate of descent.

5-48. Backup Hydraulic Pump Hot Weather Limitations.

During prolonged ground operation of the backup pump using MIL-H-83282 or MIL-H-5606 with the rotor system static, the backup pump is limited to the following temperature/time/cooldown limits because of hydraulic fluid overheating.

FAT°C (°F)	Operating Time (Minutes)	Cooldown Time (Pump Off) (Minutes)
-54°C to 32°C (-65°F to 90°F)	Unlimited	----
33°C to 38°C (91°F to 100°F)	24	72
39°C to 52°C (102°F to 126°F)	16	48

5-49. APU Operating Limitations.

To prevent APU overheating, APU operation at ambient temperature of 43°C (109°F) and above with engine and rotor operating, is limited to 30 minutes. With engine and rotor not operating, the APU may be operated continuously up to an ambient temperature of 51°C (124°F).

5-50. Windshield Anti-ice Limitations.

Windshield anti-ice check shall not be done when FAT is over 21°C (70°F).

5-51. Turbulence and Thunderstorm Operation.

a. Intentional flight into severe turbulence is prohibited.

b. Intentional flight into thunderstorms is prohibited.

c. Intentional flight into turbulence with a sling load attached and an inoperative collective trim control is prohibited.

d. Flight into turbulence conditions other than low turbulence with a FRIES load is prohibited.

Section VIII OTHER LIMITATIONS

5-52. Rescue Hoist Duty Cycle Limitations.

The hoist system is capable of performing four duty cycles as listed below in Table 5-1, with fifteen-minute intervals between each duty cycle.

Table 5-1. Rescue Hoist Duty Cycles

*Weight (lbs)	Cable Direction	Cable Speed (fpm)(ref)	**Time (seconds)	Distance ±15% (ft)
600	Reel out	215	73	200
600	Reel in	215	73	200
30 seconds interval				
600	Reel out	100	175***	200
600	Reel in	215	73	200
30 seconds interval				
600	Reel out	215	73	200
600	Reel in	100	175***	200
30 seconds interval				
600	Reel out	215	73	200
300	Reel in	215		200
30 seconds interval				
600	Reel out	100	175***	200
300	Reel in	215	73	200
30 seconds interval				
600	Reel out	215	73	200
300	Reel in	100	175***	200

NOTE: (*) Weight does not include the cable weight.

(**) Note that automatic deceleration from these speeds occurs at each end of the cycle.

(***) When operating in pilot override mode, time shall not exceed 175 seconds.

CHAPTER 6
WEIGHT/BALANCE AND LOADING

Section I GENERAL

6-1. Introduction.

This chapter contains instructions and data to compute any combination of weight and balance for this helicopter, if basic weight and moment are known.

6-2. Class.

Army Model MH-60K is in Class 2. Additional directives governing weight and balance of Class 2 aircraft forms and records are contained in AR 95 series, TM 55-1500-342-23, TM 1-1500-328-23, and DA PAM 738-751.

6-3. Helicopter Compartment and Station Diagram.

Figure 6-1 shows the reference datum line, that is 341.2 inches forward of the centroid of the main rotor, the fuselage stations, waterlines and buttlines. The fuselage is divided into compartments A through F. The equipment in each compartment is listed on DD Form 365-1 (Chart A) in the Weight and Balance Handbook.

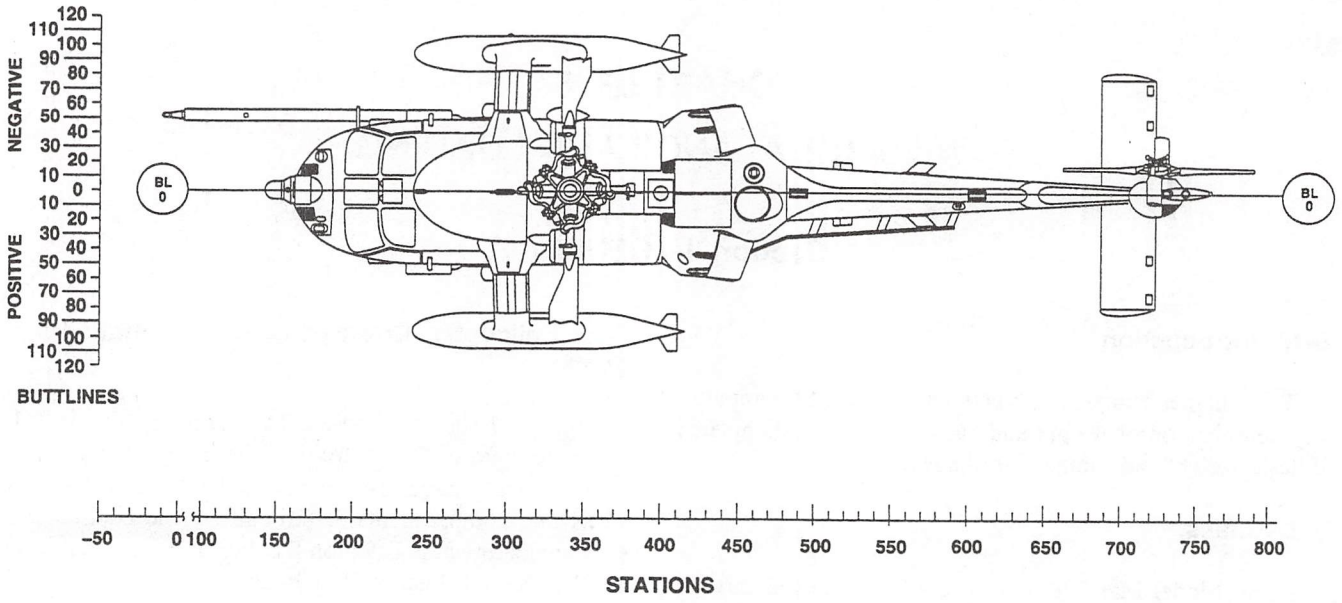

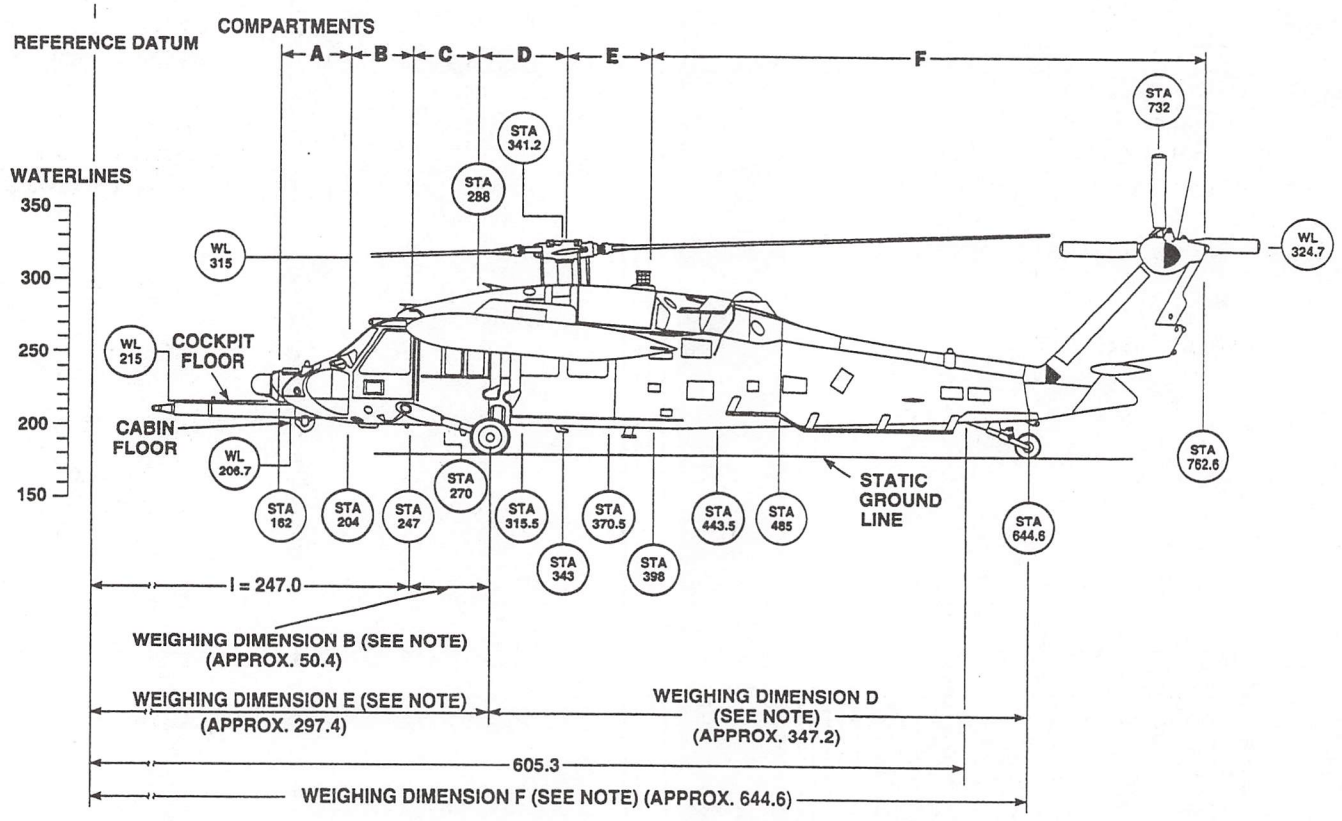

NOTES: MEASURE AFTER LEVELING – ALL DIMENSIONS IN INCHES

AK0048
SA

Figure 6-1. Helicopter Compartment and Station Diagram

Section II WEIGHT AND BALANCE

6-4. Scope.

This section provides appropriate information required for the computation of weight and balance for loading an individual helicopter. The forms currently in use are the DD Form 365 series. The crewmember should have available the current basic weight and moment which is obtained from DD Form 365-3 (Chart C) for the individual helicopter. This chapter contains weight and balance definitions; explanation of charts and tables, and weight and moment information on various loading and aircraft configurations to enable calculation of the aircraft center of gravity.

6-5. Weight Definitions.

a. Basic Weight. Basic weight of an aircraft is that weight which includes all hydraulic systems and oil systems full, trapped and unusable fuel, and all fixed equipment, to which it is only necessary to add the crew, fuel, cargo, and ammunition (if carried) to determine the gross weight for the aircraft. The basic weight varies with structural modifications and changes of fixed aircraft equipment.

b. Operating Weight. Operating weight includes the basic weight plus aircrew, the aircrew's baggage, and emergency and other equipment that may be required. Operating weight does not include the weight of fuel, ammunition, cargo, or external auxiliary fuel tanks if such tanks are to be disposed of during flight.

c. Gross Weight. Gross weight is the total weight of an aircraft and its contents.

6-6. Balance Definitions.

6-7. Horizontal Reference Datum.

The horizontal reference datum line is an imaginary vertical plane at or forward of the nose of the helicopter from which all horizontal distances are measured for balance purposes. Figure 6-1 shows this reference datum line as balance station zero.

6-8. Arm.

Arm, for balance purposes, is the horizontal distance in inches from the reference datum line to the CG of the item. Arm may be determined from the helicopter diagram in Figure 6-1.

6-9. Moment.

Moment is the weight of an item multiplied by its arm. Moment divided by a constant is generally used to simplify balance calculations by reducing the number of digits. For this helicopter, moment/1000 has been used.

6-10. Average Arm.

Average arm is the arm obtained by adding the weights and moments of a number of items, and dividing the total moment by the total weight.

6-11. Basic Moment.

Basic moment is the sum of the moments for all items making up the basic weight. When using data from an actual weighing of a helicopter, the basic moment is the total of the basic helicopter with respect to the reference datum. Basic moment used for computing DD Form 365-4 is the last entry on DD Form 365-3 for the specific helicopter.

6-12. Center of Gravity (CG).

Center of gravity is the point about which a helicopter would balance if suspended. Its distance from the reference datum line is found by dividing the total moment by the gross weight of the helicopter.

6-13. CG Limits.

CG limits (Figure 6-2) defines the permissible range for CG stations. The CG of the loaded helicopter must be within these limits at takeoff, in the air, and on landing.

6-14. DD Form 365-3 (Chart C) Weight and Balance Records.

DD Form 365-3 (Chart C) is a continuous history of the basic weight, moment, and balance, resulting from structural and equipment changes in service. At all times the last weight, moment/constant, is considered the current weight and balance status of the basic helicopter.

6-15. Loading Data.

The loading data in this chapter is intended to provide information necessary to work a loading problem for the helicopter. From the figures, weight and moment are obtained for all variable load items and are added to the current basic weight and moment from DD Form 365-3 (Chart C) to obtain the gross weight and moment. If the helicopter

CENTER OF GRAVITY
11,500 TO 18,000 POUNDS GROSS WEIGHT

EXAMPLE

WANTED

DETERMINE IF LOADING LIMITS ARE EXCEEDED

KNOWN

GROSS WEIGHT = 16,000 POUNDS
MOMENT / 1000 = 5600

METHOD

ENTER GROSS WEIGHT AT 16,000 POUNDS, MOVE RIGHT TOTAL MOMENT / 1000 = 5600. CG IS WITHIN LIMITS WHEN INTERCEPT OCCURS BETWEEN FORWARD AND AFT LIMITS (LIGHT AREA). MOVE DOWN TO IDENTIFY ARM = 350.5.

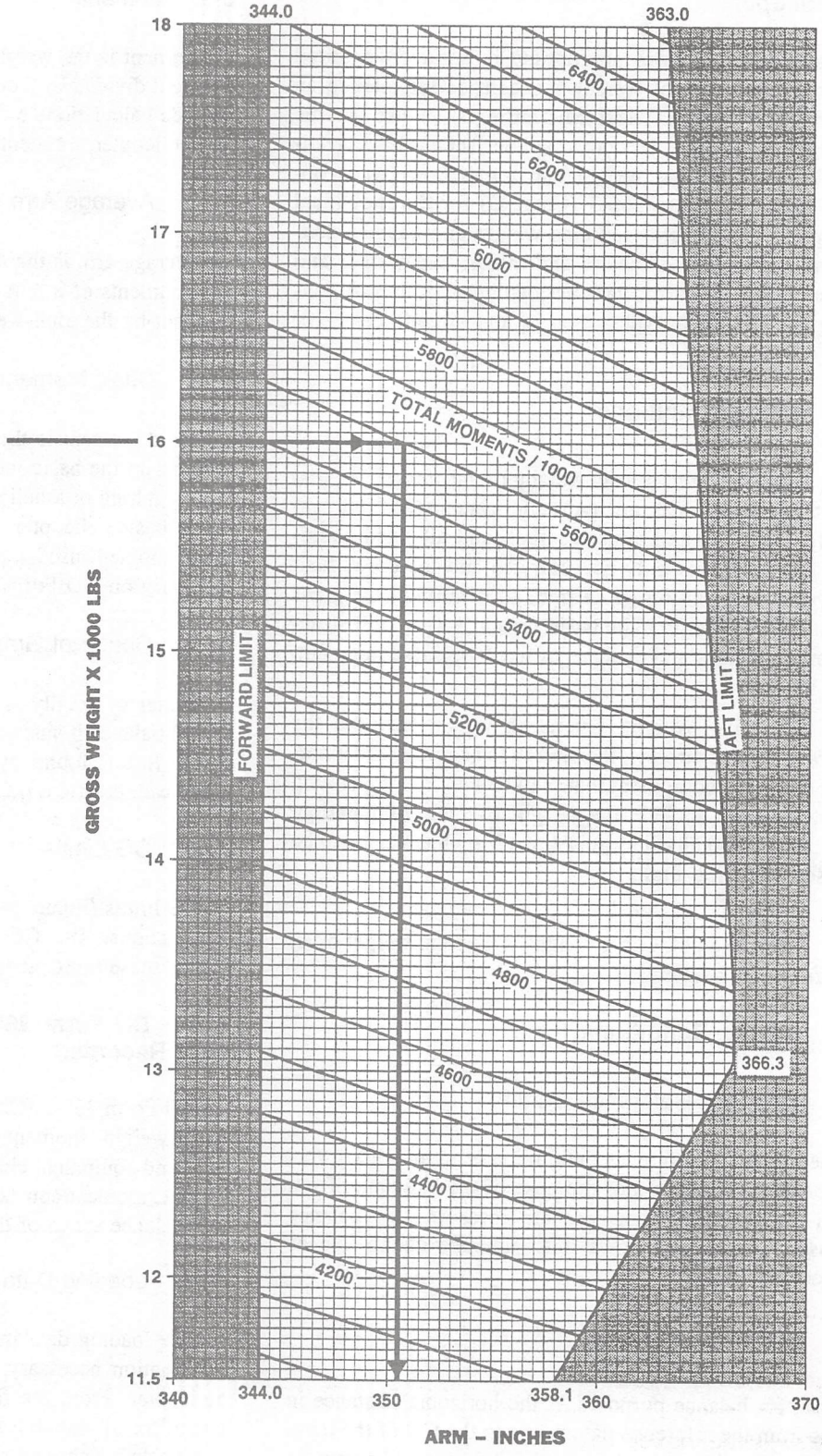

LEGEND

BEYOND LIMITS

DATA BASIS: CALCULATED

Figure 6-2. Center of Gravity Limits Chart (Sheet 1 of 2)

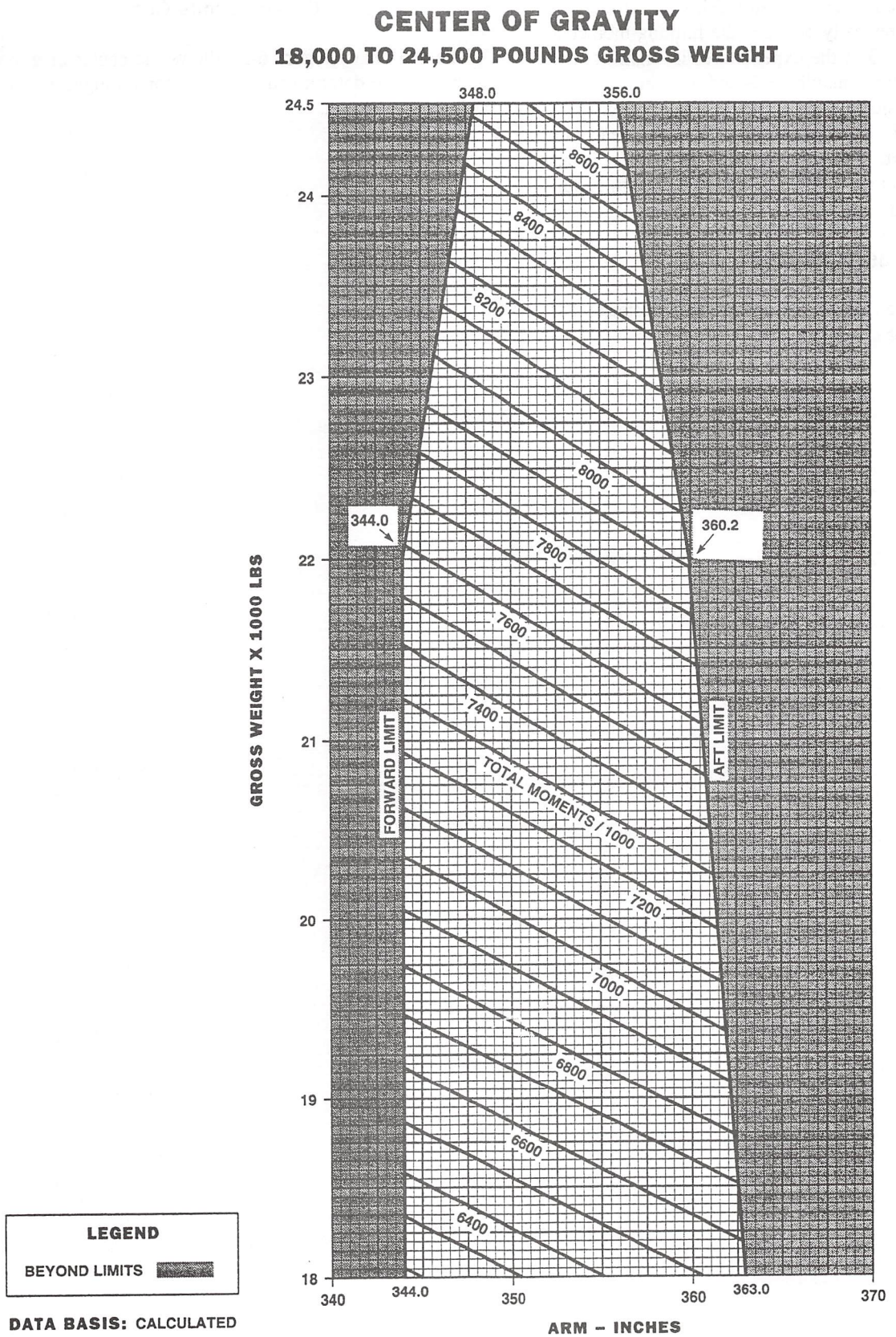

Figure 6-2. Center of Gravity Limits Chart (Sheet 2 of 2)

is loaded within the forward and aft CG limits, the moment figure will fall numerically between the limiting moments. The effect on the CG of the expenditures in flight of such items as fuel and cargo may be checked by subtracting the weights and moments of such items from the takeoff gross weight and moment, and checking the new moment, with the CG limits chart. This check should be made to determine whether or not the CG will remain within limits during the entire flight.

6-16. DD Form 365-4 (Form F).

There are two versions of DD Form 365-4. Refer to TM 55-1500-342-23 for completing the form.

6-17. Center of Gravity Limits Chart.

The CG chart (Figure 6-2) allows the center of gravity (inches) to be determined when the total weight and total moment are known.

Section III FUEL/OIL

6-18. Fuel Moments.

CAUTION

When operating with external tanks, fuel transfer must be made in a manner to prevent the helicopter from exceeding CG limits.

When operating with a light cabin load or no load, it may be necessary to adjust fuel load to remain within aft CG limits.

Fuel moments for the main and external fuel tanks are shown on Figure 6-3 and Table 6-1. Weight of JP4 is 6.5 pounds per gallon, JP5 is 6.8 pounds per gallon, Jet A is 6.75 pounds per gallon, and JP8 is 6.713 pounds per gallon.

6-19. Asymmetric Fuel Loads.

The lateral CG chart (Figure 6-4) identifies the worse case asymmetric fuel loads. The most adverse condition is to have all of the fuel tanks on one side of the aircraft empty and all those on the other side full. As shown in Figure 6-4, the worse condition may result when lateral CG is near the edge of the envelope. This chart is based on an aircraft at maximum gross weight with two external fuel tanks. If the lateral CG envelope is near its limits, the aircraft flying qualities will be degraded and the aircraft may have excessive roll and sideslip angles. Lateral cyclic movement may be near the control stops. Aircraft performance will be degraded due to the presence of the large sideslip angles required to maintain trim. In the event that the cyclic stick encounters the control stops, every effort should be made to bring lateral CG back near the center of the envelope. This could include jettisoning of the external fuel tanks or rearrangement of the equipment and/or personnel within the cabin area. While the aircraft is near the lateral CG envelope, it should be flown very cautiously, and extreme maneuvers must be avoided.

FUEL MOMENTS

EXAMPLE

WANTED

FUEL MOMENT

KNOWN

FUEL QUANTITY
MAIN 1700 POUNDS

METHOD

FOR MAIN TANK ENTER AT 1700 POUNDS AND MOVE RIGHT TO MAIN LINE. MOVE DOWN. READ MOMENT / 1000 = 710

230 GAL. EXTERNAL TANK FUEL ARM TABLE	
FUEL QUANTITY	ARM
1/4 FULL	319.2
1/2 FULL	320.2
3/4 FULL	320.8
FULL	321.2

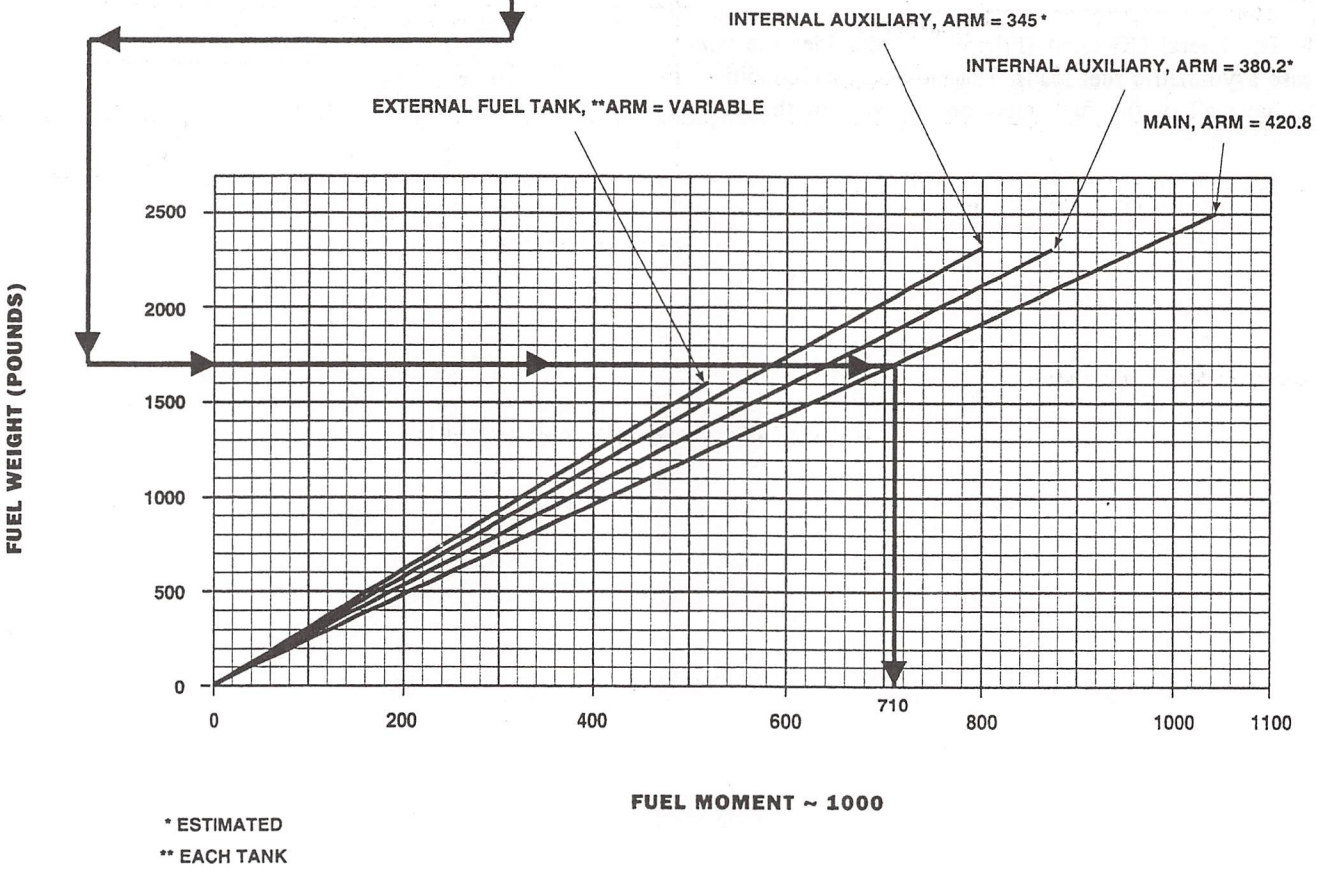

* ESTIMATED

** EACH TANK

AK0040
SA

Figure 6-3. Fuel Moments

LATERAL C. G. ENVELOPE
AS FUEL (IN POUNDS) EMPTIES ON ONE SIDE TOTALLY

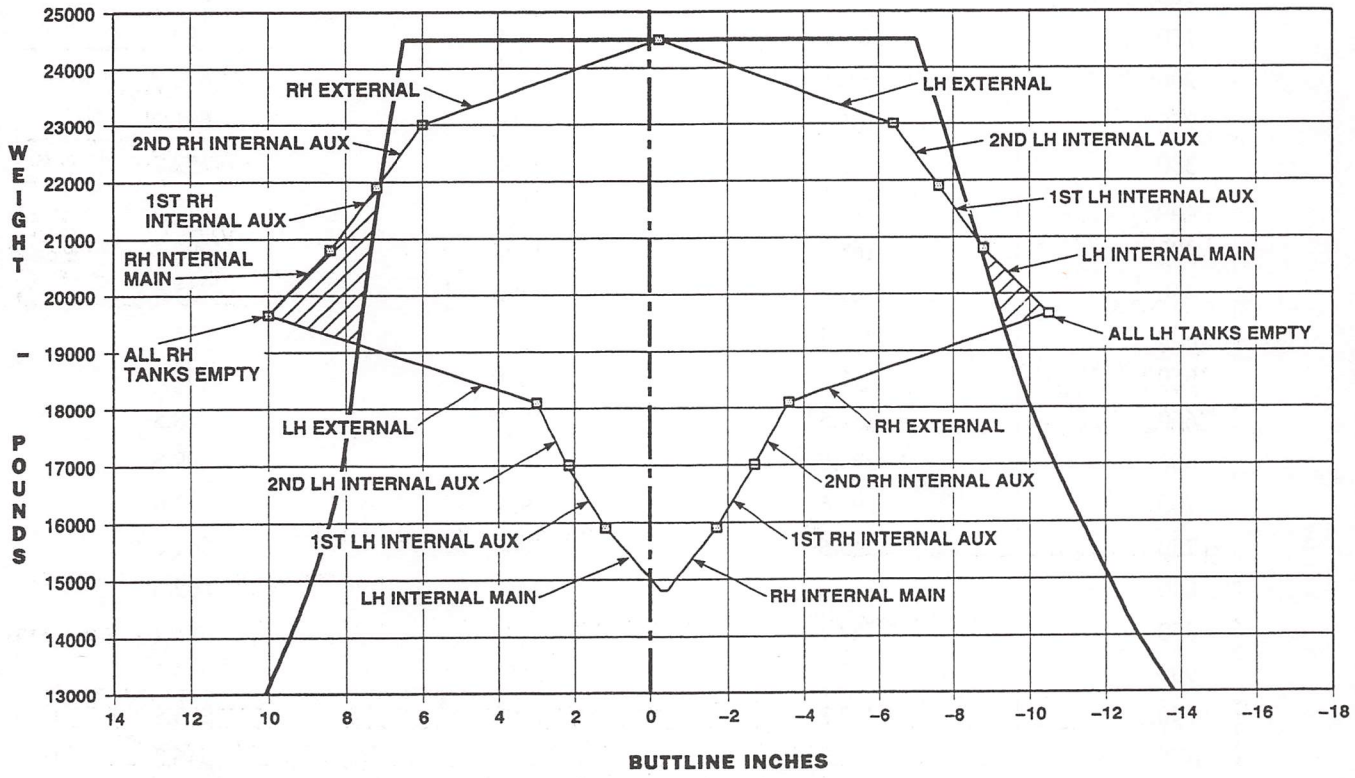

DATA BASIS: CALCULATED

AK1846
SA

Figure 6-4. Asymmetric Fuel Loads

Table 6-1. Fuel Loading Data (Sheet 1 of 5)

MAIN FUEL TANKS 2 TANK SYSTEM ARM = 420.8			
WEIGHT (lbs)	MOMENT/1000	WEIGHT (lbs)	MOMENT/1000
50	21.0	1300	547.0
100	42.1	1350	568.1
150	63.1	1400	589.1
200	84.2	1450	610.2
250	105.2	1500	631.2
300	126.2	1550	652.2
350	147.3	1600	673.3
400	168.3	1650	694.3
450	189.4	1700	715.4
500	210.4	1750	736.4
550	231.4	1800	757.4
600	252.5	1850	778.5
650	273.5	1900	799.5
700	294.6	1950	820.6
750	315.6	2000	841.6
800	336.6	2050	862.6
850	357.7	2100	883.7
900	378.7	2150	904.7
950	399.8	2200	925.8
1000	420.8	2250	946.8
1050	441.8	2300	967.8
1100	462.9	2338*	983.8
1150	483.9	2350	988.9
1200	505.0	2400	1009.9
1250	526.0	2446**	1029.3

NOTES:

1. A single asterisk (*) indicates the approximate weight and moment for full fuel tanks using JP-4 fuel at 6.5 lbs per gallon.
2. A double asterisk (**) indicates the approximate weight and moment for full fuel tanks using JP-5 at 6.8 lbs per gallon.
3. The total usable fuel capacity is 359.7 gallons (179.8) gallons per tank).
4. Total weight of fuel is dependent upon specific gravity and temperature. Slight variations in main fuel tank quantities can be expected on the instrument display page when tanks are full.
5. Automatic fuel transfer is initiated when the fuel level in either main tank is reduced to 887 lbs ±10%, and ceases when the tank fuel level reaches 1050 lbs ±10%.

Table 6-1. Fuel Loading Data (Sheet 2 of 5)

INTERNAL AUXILIARY FUEL SYSTEM			
TANK #4	ARM = 309.5	TANK #3	ARM = 345.0
WEIGHT (lbs)	MOMENT/1000	WEIGHT (lbs)	MOMENT/1000
50	15.5	50	17.3
100	31.0	100	34.5
150	46.4	150	51.8
200	61.9	200	69.0
250	77.4	250	86.3
300	92.9	300	103.5
350	108.3	350	120.8
400	123.8	400	138.0
450	139.3	450	155.3
500	154.8	500	172.5
550	170.2	550	189.8
600	185.7	600	207.0
650	201.2	650	224.3
700	216.7	700	241.5
750	232.1	750	258.8
800	247.6	800	276.0
850	263.1	850	293.3
900	278.6	900	310.5
950	294.0	950	327.8
1000	309.5	1000	345.0
1050	325.0	1050	362.3
1100	340.5	1100	379.5
1105*	342.0	1105*	381.2
1150	355.9	1150	396.8
1156**	357.8	1156**	398.8

NOTES:
1. A single asterisk (*) indicates the approximate weight and moment for full fuel tanks using JP-4 fuel at 6.5 lbs per gallon.
2. A double asterisk (**) indicates the approximate weight and moment for full fuel tanks using JP-5 at 6.8 lbs per gallon.
3. The total usable fuel capacity is 340 gallons (170) gallons per tank).
4. Total weight of fuel is dependent upon specific gravity and temperature. Slight variations in internal auxiliary fuel tank quantities can be expected on the instrument display page when tanks are full.
5. Fuel transfer is performed manually.

Table 6-1. Fuel Loading Data (Sheet 3 of 5)

INTERNAL AUXILIARY FUEL SYSTEM TANKS #1 AND #2		ARM = 380	
WEIGHT (lbs)	MOMENT/1000	WEIGHT (lbs)	MOMENT/1000
50	19.0	1250	475.0
100	38.0	1300	494.0
150	57.0	1350	513.0
200	76.0	1400	532.0
250	95.0	1450	551.0
300	114.0	1500	570.0
350	133.0	1550	589.0
400	152.0	1600	608.0
450	171.0	1650	627.0
500	190.0	1700	646.0
550	209.0	1750	665.0
600	228.0	1800	684.0
650	247.0	1850	703.0
700	266.0	1900	722.0
750	285.0	1950	741.0
800	304.0	2000	760.0
850	323.0	2050	779.0
900	342.0	2100	798.0
950	361.0	2150	817.0
1000	380.0	2200	836.0
1050	399.0	2210*	839.8
1100	418.0	2250	855.0
1150	437.0	2300	874.0
1200	456.0	2312**	878.6

NOTES:
1. A single asterisk (*) indicates the approximate weight and moment for full fuel tanks using JP-4 fuel at 6.5 lbs per gallon.
2. A double asterisk (**) indicates the approximate weight and moment for full fuel tanks using JP-5 at 6.8 lbs per gallon.
3. The total usable fuel capacity is 340 gallons (170) gallons per tank).
4. Total weight of fuel is dependent upon specific gravity and temperature. Slight variations in internal auxiliary fuel tank quantities can be expected on the instrument display page when tanks are full.
5. Fuel transfer is performed manually.

Table 6-1. Fuel Loading Data (Sheet 4 of 5)

EXTERNAL FUEL TANKS

2 TANK SYSTEM ARM = VARIABLE CAPACITY

WEIGHT (lbs)	MOMENT/1000	WEIGHT (lbs)	MOMENT/1000
50	16	900	288
100	31	950	304
150	47	1000	321
200	63	1050	337
250	79	1100	353
300	96	1150	369
350	112	1200	385
400	128	1250	401
450	144	1300	417
500	160	1350	433
550	176	1400	450
600	192	1450	466
650	208	1495*	480
700	224	1500	482
750	240	1550	498
800	256	1564**	502
850	272		

NOTES:

1. A single asterisk (*) indicates the approximate weight and moment for full fuel tanks using JP-4 fuel at 6.5 lbs per gallon.
2. A double asterisk (**) indicates the approximate weight and moment for full fuel tanks using JP-5 at 6.8 lbs per gallon.
3. The total usable fuel capacity is 460 gallons (230) gallons per tank).
4. Total weight of fuel is dependent upon specific gravity and temperature. Slight variations in external fuel tank quantities can be expected on the instrument display page when tanks are full.
5. Fuel transfer is performed automatically or manually. Normal transfer operations should be in the automatic mode.

Table 6-1. Fuel Loading Data (Sheet 5 of 5)

FUEL ARM TABLE - EXTERNAL TANKS

FUEL QUANTITY	ARM
1/4 Full	319.2
1/2 Full	320.2
3/4 Full	320.8
Full	321.2

230 GALLON EXTERNAL FUEL TANK

	WEIGHT (lbs)	CG (STATION) ARM
Empty Tank	160 ±3	324.3
Trapped Fuel	16.9	320.5

REFUELING PROBE

	WEIGHT (lbs)	CG (STATION) ARM
Probe Retracted	195.6	168.5
Probe Extended	195.6	97.6
Probe Removed	140	168.0
Unusable Fuel in Probe	56	170.0
Step Assembly on Probe	2	242.0
Drouge Load Added	50	-27.1

Table 6-2. Armament Loading Data

EXPENDABLES

CHAFF DISPENSED M-130, 30 RDS ARM - 528.0

WEIGHT (lbs)	MOMENT/1000
9.9	5

FLARE DISPENSED M-130, 30 RDS ARM - 523.6

WEIGHT (lbs)	MOMENT/1000
12.9	7

M-134 MINIGUN ARM - 283.9

WEIGHT (lbs)	MOMENT/1000
377.6	107.2

LIVE AMMUNITION WEIGHT PER ROUNDS

7.62MM	NO. ROUNDS
7	100
13	200
20	300
26	400
32	500
39	600
46	700
52	800

GRENADES

WEIGHT M8/M18	QUANTITY
3/2	2
4/5	6
6/7	9
8/10	12
10/12	15
12/14	18

Section IV PERSONNEL

6-20. Personnel Moments.

When aircraft are operated at critical gross weights, the exact weight of each individual occupant plus equipment should be used. Personnel moments data is shown on Figure 6-5. If weighing facilities are not available, or if the tactical situation dictates otherwise, loads shall be computed as follows:

a. Combat equipped soldiers: 240 pounds per individual.

b. Combat equipped paratroopers: 260 pounds per individual.

c. Crew and passengers with no equipment: compute weight according to each individual's estimate (Crew approximately 235 pounds).

PERSONNEL MOMENTS

EXAMPLE

WANTED

PERSONNEL MOMENTS

KNOWN

3 PERSONNEL IN ROW 3
TOTAL WEIGHT 600 POUNDS

METHOD

ENTER WEIGHT AT 600 POUNDS – MOVE RIGHT TO ROW 3. MOVE DOWN. READ MOMENT / 1000 = 192

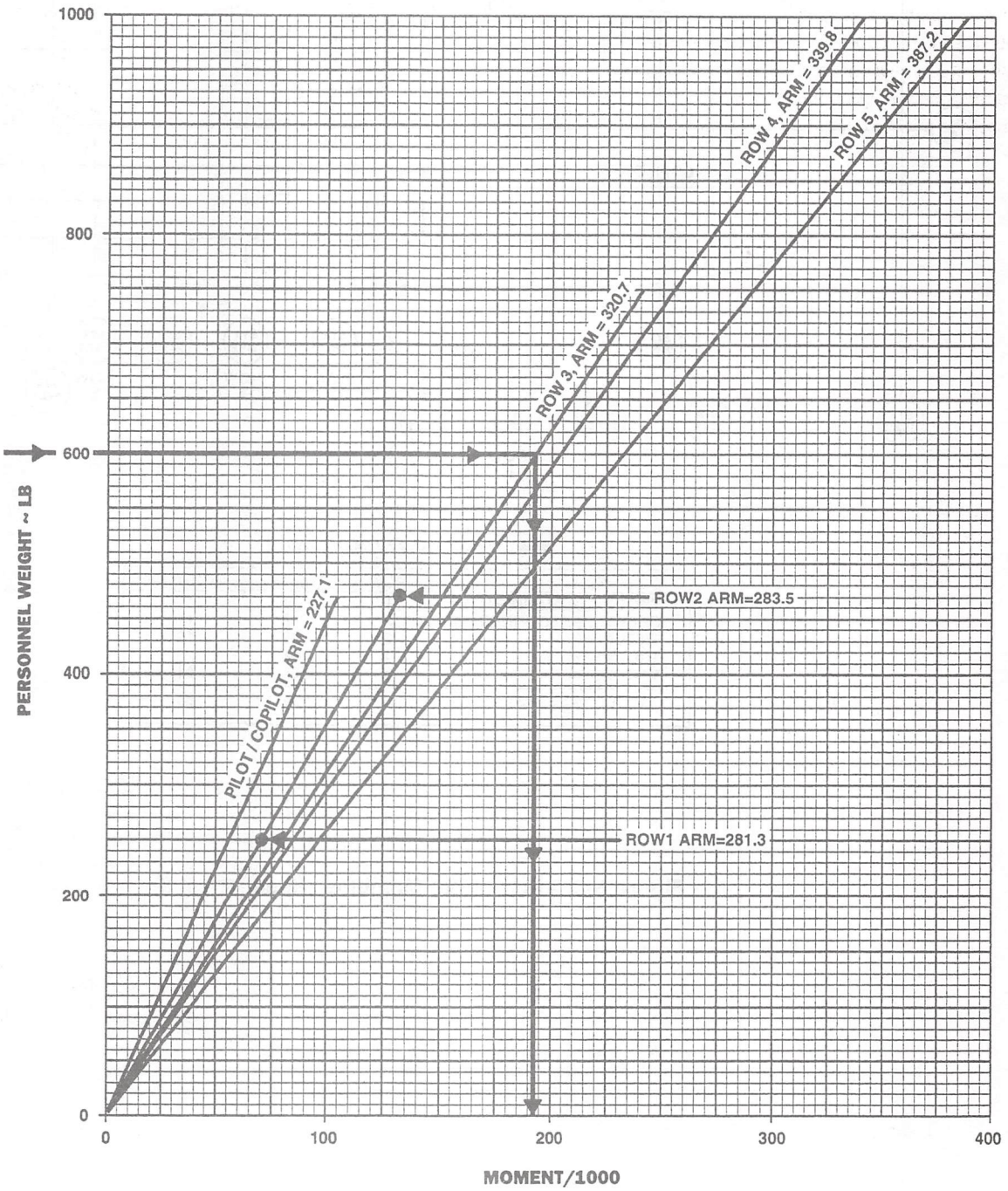

DATA BASIS: CALCULATED

AK0041_1
SA

Figure 6-5. Personnel Moments (Sheet 1 of 2)

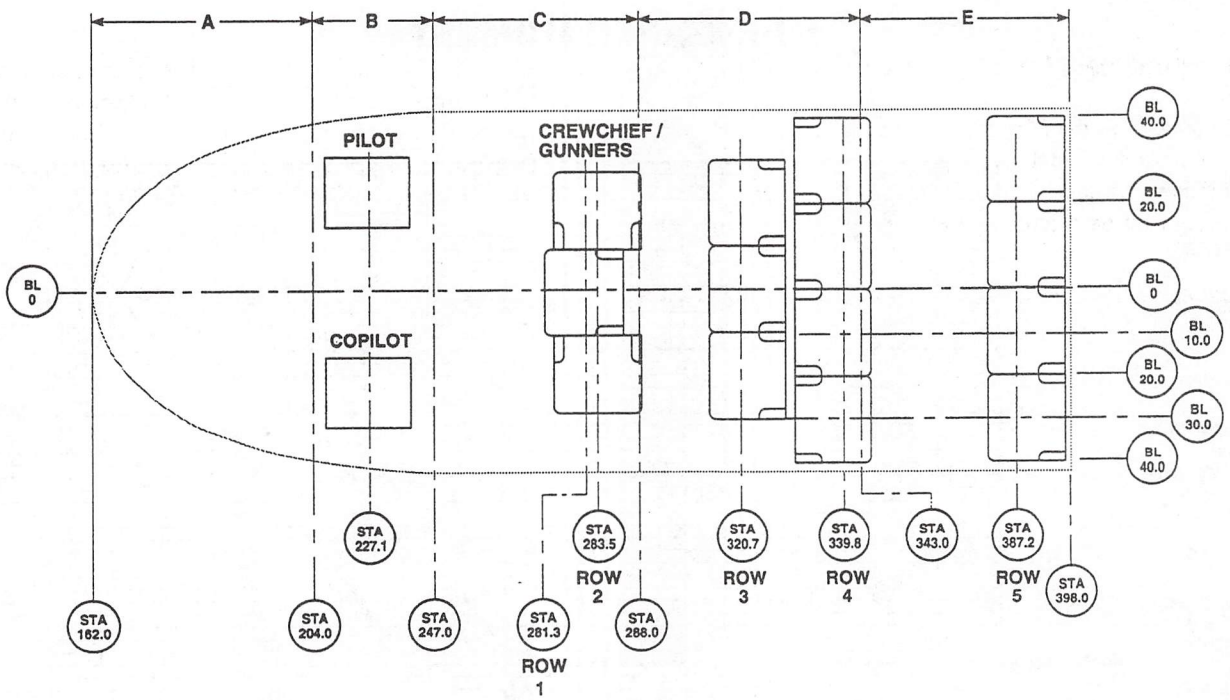

SEAT WEIGHT AND MOMENT TABLE

ITEM	ROW	WIEGHT	MOM/1000
TROOP COMMANDER (1)	1	13	4
CREWCHIEF / GUNNER (2)	2	48	14
TROOPS (3)	3	48	15
TROOPS (4)	4	68	23
TROOPS (4)	5	64	25
TOTAL (14 SEATS)		241	81

AK0041_2 SA

Figure 6-5. Personnel Moments (Sheet 2 of 2)

Section V MISSION EQUIPMENT

6-21. Armament Loading Data Moments.

Armament on the MH-60K consists of two M134 miniguns, ammunition, and grenades. When calculating weight and moment without using the IASS, various loads of ammunition must be calculated using the weight and moment values of the location at which the ammunition is stored. Refer to Figure 6-8, Cargo Tiedown Arrangement, for arm locations within the cabin compartment. When determining the moment for a given weight and arm location, multiply weight times arm divided by 1000 (weight x arm ÷ 1000).

Section VI CARGO LOADING

6-22. Cabin Dimensions.

Refer to Figure 6-6 for dimensions. For loading, and weight and balance purposes, the helicopter fuselage is divided into six compartments, A through F, three of which are in the cabin, C, D, and E. There are 20 tiedown fittings rated at 5,000 pounds each. Cargo carrier restraint rings, rated at a 3500-pound capacity, are at stations 308 and 379, to cover the 71 inches of longitudinal space.

6-23. Cabin Doors.

Cabin doors are at the rear end of the cargo compartment on each side of the fuselage. The door openings are 52 inches high and 63.4 inches wide; maximum package sizes accommodated by the openings are 52 inches high by 62 inches wide and are shown on Table 6-3 and Figure 6-7.

6-24. Maximum Cargo Size Diagram for Loading Through Cabin Doors.

Table 6-3 and Figure 6-7 show the largest size for cargo of various shapes that can be loaded into the cabin through the cabin doors.

6-25. Tiedown Fittings and Restraint Rings.

The 20 tiedown fittings (Figure 6-8) installed on the cargo floor can restrain a 5,000-pound load in any direction. All tiedown fittings incorporate studs that are used to install the troop seats. Eight net restraint rings in the cargo compartment prevent cargo from hitting the bulkhead at station 398, or entering the crew area. Each restraint ring is rated at 3500-pound capacity in any direction.

6-26. Equipment Loading and Unloading.

6-27. Data Prior to Loading.

The following data should be assembled or gathered by the loading crew before loading (Refer to FM 55-450-2, Army Helicopter Internal Load Operations):

a. Weight of the individual items of cargo.

b. Overall dimensions of each item of cargo (in inches).

c. The helicopter's center of gravity.

d. Floor loads for each item of cargo.

e. Any shoring that may be required.

f. When required, the location of the center of gravity of an individual item of cargo.

6-28. Cargo Center of Gravity Planning.

The detail planning procedure consists of four steps, as follows:

a. Determine ALLOWABLE LOAD from LIMITATIONS section of DD Form 365-4.

b. Plan the location in the helicopter for the individual items of cargo. Since the CG of the load is determined by the station method, then specific locations must be assigned to each item of cargo.

c. Determine the CG of the cargo load as planned. Regardless of the quantity, type, or size of cargo, use the station method.

d. Determine the CG of the fully-loaded helicopter from Figure 6-2, and if the CG of the helicopter falls within allowable limits. If it does, the cargo can be loaded. If not, the planned location of the individual items must be changed until an acceptable loading plan is obtained. The results obtained using the Cargo Planning Placement Charts are normally satisfactory for final cargo placement. When cargo loads consists of more than one item, the heavier items of cargo should be placed so that their CG is about in the center of the cabin, and the lighter items of cargo are forward and rear of them.

6-29. Cargo Hook Moments.

Moments for cargo suspended from the cargo hook are shown in Figure 6-9 and Table 6-4.

6-30. Rescue Hoist Moments.

a. Moments (forward and aft) for objects suspended from the rescue hoist are shown in Figure 6-10 and Table 6-5.

b. Lateral CG limits will not be exceeded when helicopter is loaded symmetrically, and hoist load limits are not exceeded.

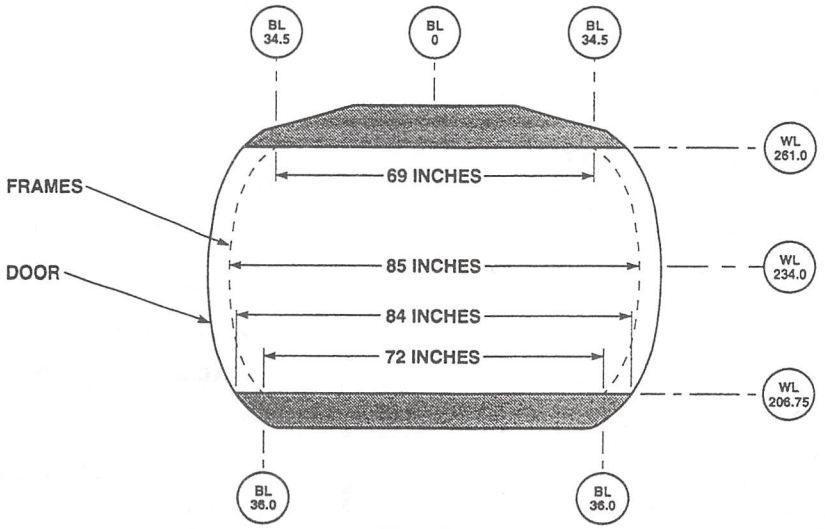

STA 279.0
LOOKING TO THE REAR

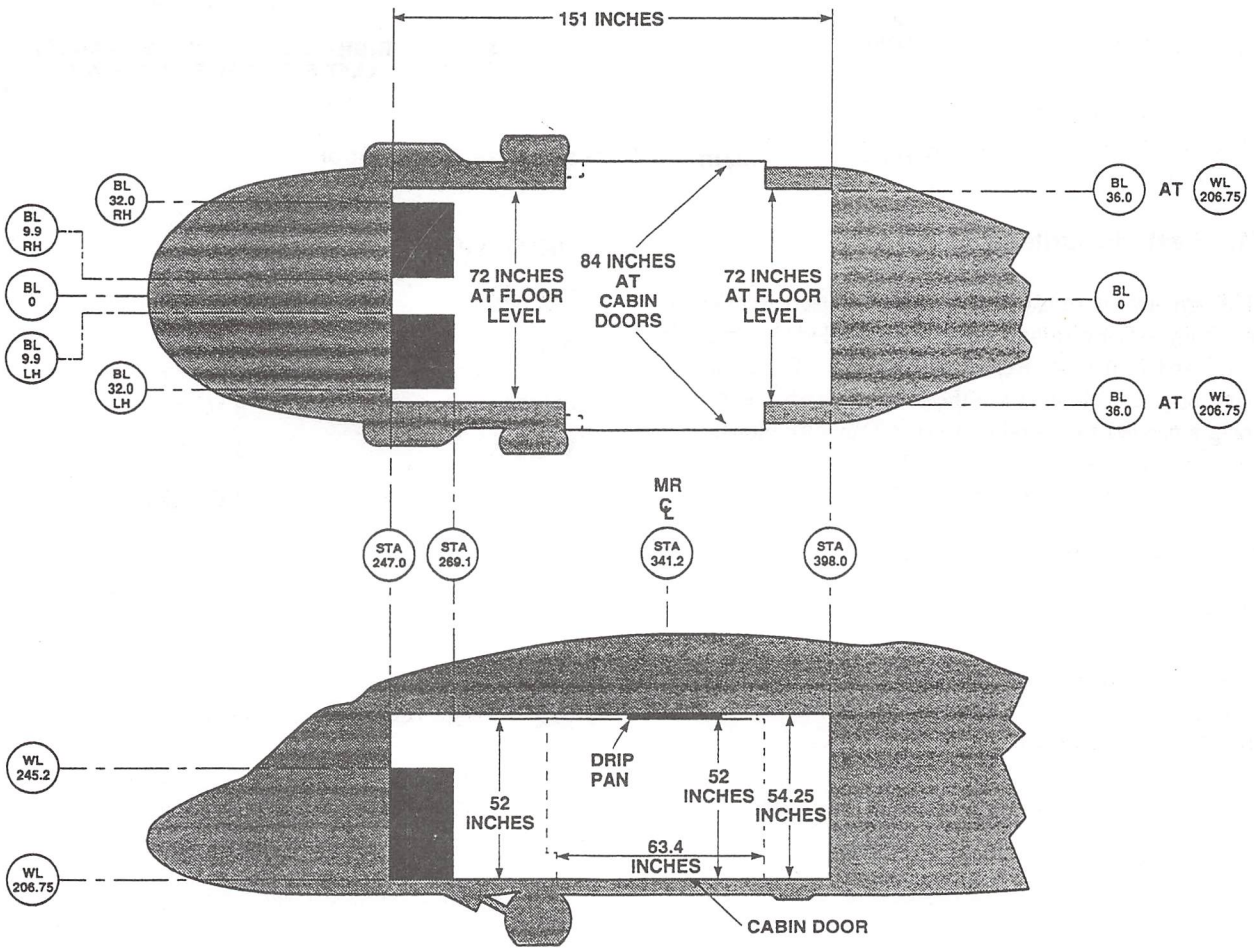

CABIN AND DOOR DIMENSIONS

AK0036
SA

Figure 6-6. Cabin Dimensions

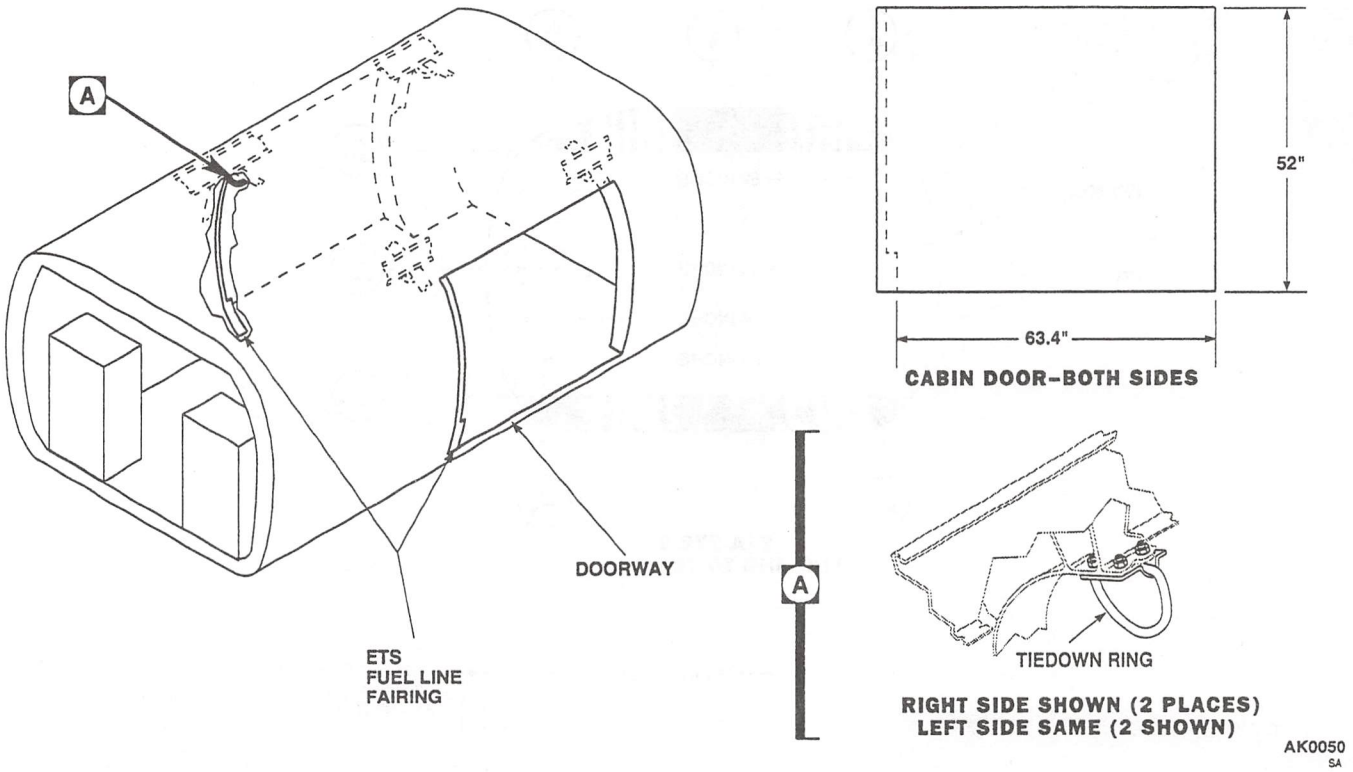

Figure 6-7. Maximum Package Size/Cargo Doors

6-31. Restraint Criteria.

The amount of restraint that must be used to keep the cargo from moving in any direction is called the "restraint criteria" and is usually expressed in units of the force of gravity, or g's. Following are the units of the force of gravity or g's needed to restrain cargo in four directions:

DIRECTION	Gs
Forward	12 Gs
Rear	3 Gs
Lateral	8 Gs
Vertical	3 Gs (Up)
	3 Gs (Down)

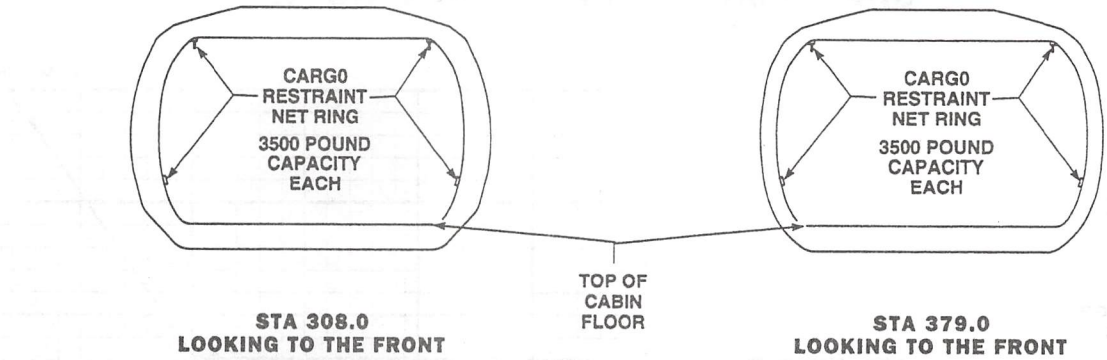

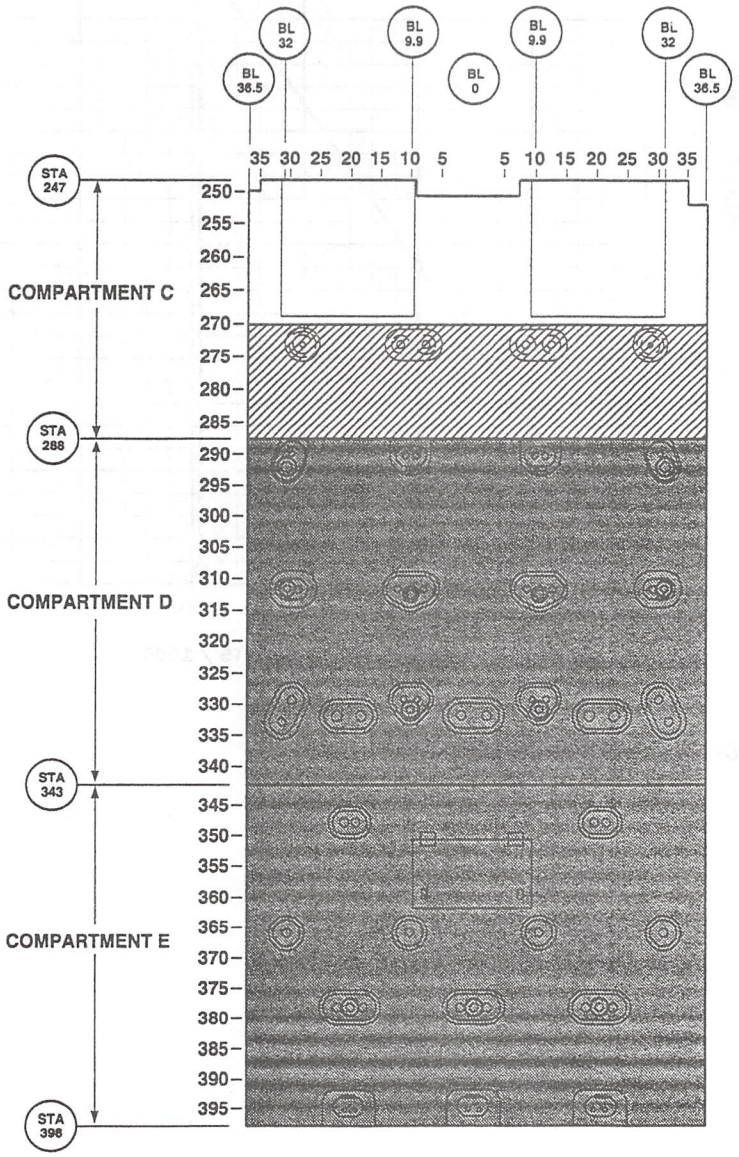

◎ TIEDOWN FITTING
5000 POUNDS CAPACITY

	MAXIMUM COMPARTMENT CAPACITY IN POUNDS	FLOOR CAPACITY POUNDS PER SQUARE FOOT
	2700	300
	8370	300
	8370	300

AK0044
SA

Figure 6-8. Cargo Tiedown Arrangement

CARGO MOMENTS – CARGO HOOK

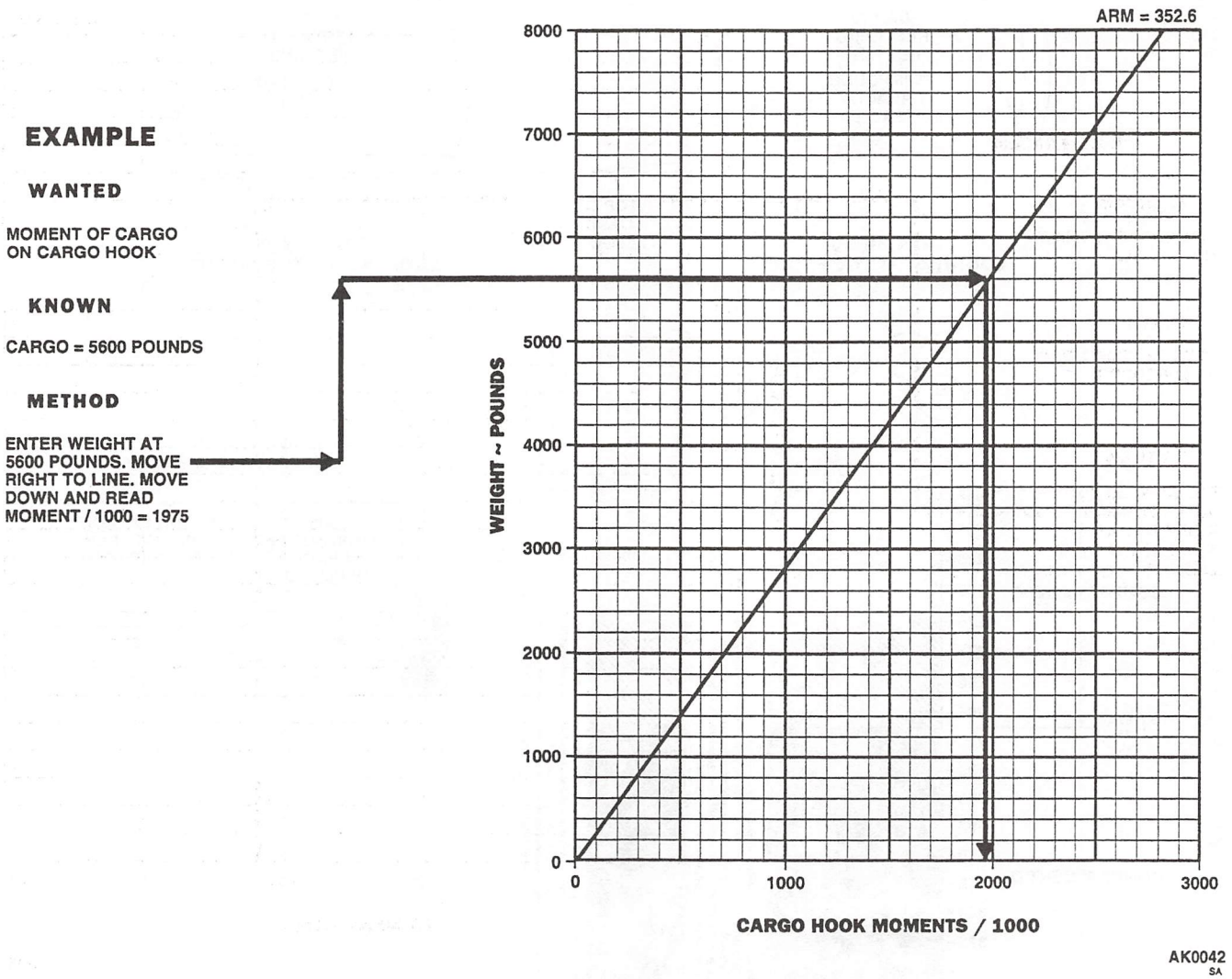

Figure 6-9. Cargo Hook Moments

RESCUE HOIST MOMENTS

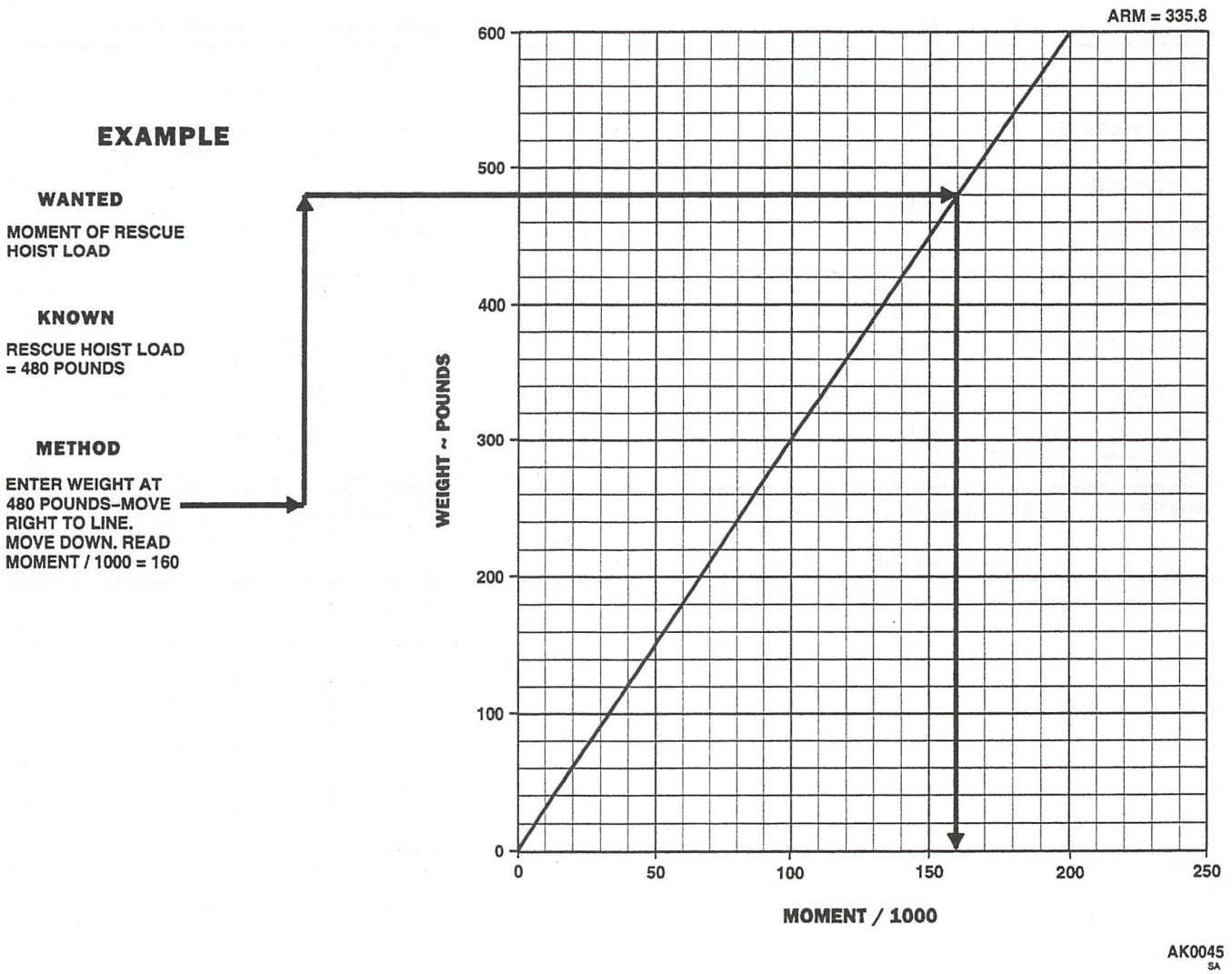

Figure 6-10. Rescue Hoist Moments

Table 6-3. Maximum Package Size Table for Cargo Doors

HEIGHT IN INCHES (52 OR LESS)	
WIDTH IN INCHES	MAXIMUM LENGTH IN INCHES
46	98
48	97
50	96
52	95
54	94
56	93
58	92
60	91
62	90

NOTES:
1. If gunners area is not used, lengths are approximately 90% of table values.
2. Internal auxiliary fuel tanks are not installed.

Table 6-4. Cargo Hook Moments

CARGO HOOK LOAD ARM = 353.0*			
WEIGHT (lbs)	MOMENT/1000	WEIGHT (lbs)	MOMENT/1000
5	2	2800	988
10	4	3000	1059
20	7	3200	1130
30	11	3400	1200
40	14	3600	1271
50	18	3800	1341
60	21	4000	1412
70	25	4200	1483
80	28	4400	1553
90	32	4600	1624
100	35	4800	1694
200	71	5000	1765
300	106	5200	1836
400	141	5400	1906
500	177	5600	1977
600	212	5800	2047
700	247	6000	2118
800	282	6200	2189
900	318	6400	2259
1000	353	6600	2330
1200	424	6800	2400
1400	494	7000	2471
1600	565	7200	2542
1800	635	7400	2612
2000	706	7600	2683
2200	777	7800	2753
2400	847	8000	2824
2600	918		

NOTES: (*) Inches from reference datum

Table 6-5. Rescue Hoist Moments

RESCUE HOIST LOAD ARM = 335.8			
WEIGHT (lbs)	MOMENT/1000	WEIGHT (lbs)	MOMENT/1000
5	2	260	87
10	3	280	94
20	7	300	101
30	10	320	107
40	13	340	114
50	17	360	121
60	20	380	128
70	24	400	134
80	27	420	141
90	30	440	148
100	34	460	154
120	40	480	161
140	47	500	168
160	54	520	175
180	60	540	181
200	67	560	188
220	74	580	195
240	81	600	201

NOTES: (*) Inches from reference datum

CHAPTER 7
PERFORMANCE DATA

Section I INTRODUCTION

7-1. Purpose.

The purpose of this chapter is to provide the best available performance data for the helicopter. Regular use of this information will enable you to receive maximum safe utilization of the helicopter. The information is primarily intended for mission planning and is most useful when planning operations in unfamiliar areas or at extreme conditions. The data may also be used in flight, to establish unit or area standard operating procedures, and to inform ground commanders of performance/risk tradeoffs. Although maximum performance is not always required, regular use of this chapter is recommended for these reasons:

a. Knowledge of your performance margin will allow you to make better decisions when unexpected conditions or alternate missions are encountered.

b. Situations requiring maximum performance will be more readily recognized.

c. Familiarity with the data will allow performance to be computed more easily and quickly.

d. Experience will be gained in accurately estimating the effects of variables for which data are not presented.

7-2. Chapter 7 Index.

The following index contains a list of the sections, titles, figure numbers, subjects and page numbers of each performance data chart contained in this chapter.

Section and Figure Numbers	Title	Page
I	INTRODUCTION	7-1
7-1	Temperature Conversion Chart	7-4
II	TORQUE AVAILABLE	7-5
7-2	Aircraft Torque Factor (ATF)	7-6
7-3	Torque Conversion Chart	7-7
7-4	Maximum Torque Available	7-8
III	HOVER	7-11
7-5	Hover	7-12
7-6	Maximum Gross Weight to Hover OGE	7-15
7-7	Maximum Gross Weight to Hover IGE	7-19
IV	TAKEOFF	7-21
7-8	Takeoff	7-22
V	CRUISE	7-23
7-9	Sample Cruise Chart	7-25
7-10	Cruise - Pressure Altitude Sea Level - Clean	7-26
7-11	Cruise - Pressure Altitude Sea Level - ETS Installed	7-32
7-12	Cruise - Pressure Altitude 2000 Feet - Clean	7-38
7-13	Cruise - Pressure Altitude 2000 Feet - ETS Installed	7-44
7-14	Cruise - Pressure Altitude 4000 Feet - Clean	7-50
7-15	Cruise - Pressure Altitude 4000 Feet - ETS Installed	7-56
7-16	Cruise - Pressure Altitude 6000 Feet - Clean	7-62
7-17	Cruise - Pressure Altitude 6000 Feet - ETS Installed	7-68

Section and Figure Numbers	Title	Page
7-18	Cruise - Pressure Altitude 8000 Feet - Clean	7-74
7-19	Cruise - Pressure Altitude 8000 Feet - ETS Installed	7-79
7-20	Cruise - Pressure Altitude 10,000 Feet - Clean	7-84
7-21	Cruise - Pressure Altitude 10,000 Feet - ETS Installed	7-89
7-22	Cruise - Pressure Altitude 12,000 Feet - Clean	7-94
7-23	Cruise - Pressure Altitude 12,000 Feet - ETS Installed	7-99
7-24	Cruise - Pressure Altitude 14,000 Feet - Clean	7-104
7-25	Cruise - Pressure Altitude 14,000 Feet - ETS Installed	7-108
7-26	Cruise - Pressure Altitude 16,000 Feet - Clean	7-112
7-27	Cruise - Pressure Altitude 16,000 Feet - ETS Installed	7-116
7-28	Cruise - Pressure Altitude 18,000 Feet - Clean	7-120
7-29	Cruise - Pressure Altitude 18,000 Feet - ETS Installed	7-124
7-30	Cruise - Pressure Altitude 20,000 Feet - Clean	7-128
7-31	Cruise - Pressure Altitude 20,000 Feet - ETS Installed	7-131
VI	OPTIMUM CRUISE	7-134
7-32	Optimum Altitude For Maximum Range	7-135
VII	DRAG	7-137
7-33	External Load Drag	7-138
VIII	CLIMB/DESCENT	7-139
7-34	Climb - 2 Engine, ATF = 0.9	7-140
7-35	Climb/Descent	7-143
IX	FUEL FLOW	7-145
7-36	Single/Dual Engine Fuel Flow	7-146
X	AIRSPEED SYSTEM CHARACTERISTICS	7-147
7-37	Airspeed Correction Chart	7-148
XI	AERIAL REFUELING	7-150
7-38	Refueling Envelope	7-151
XII	SINGLE ENGINE SERVICE CEILING	7-156
7-39	Single Engine Service Ceiling ATF=1.0	7-157

7-3. General.

The data presented covers the maximum range of conditions and performance that can reasonably be expected. In each area of performance, the effects of altitude, temperature, gross weight, and other parameters relating to that phase of flight are presented. In addition to the presented data, your judgment and experience will be necessary to accurately obtain performance under a given set of circumstances. The conditions for the data are listed under the title of each chart. The effects of different conditions are discussed in the text accompanying each phase of performance. Where practical, data are presented at conservative conditions. However, NO GENERAL CONSERVATISM HAS BEEN APPLIED. All performance data presented are within the applicable limits of the helicopter.

7-4. Limits.

CAUTION

Exceeding operating limits can cause permanent damage to critical components. Over limit operations can decrease performance, cause early failure, or failure on a subsequent flight.

Applicable limits are shown on the charts. Performance generally deteriorates rapidly beyond limits. If limits are exceeded, minimize the amount and time. Enter the maximum value and time above limits on DA Form 2408-13-1, so proper maintenance action can be taken.

7-5. Use of Charts.

7-6. Dashed Line Data.

Identifies the mid point when normal line intervals are too far apart, a limit, or a second example line.

7-7. Data Basis.

The type of data used is indicated at the bottom of each performance chart under DATA BASIS. The data provided generally is based on one of three categories:

a. Flight test data. Data obtained by flight test of the helicopter by experienced flight test personnel at precise conditions using sensitive calibrated instruments.

b. Calculated data. Data based on tests, but not on flight test of the complete helicopter.

c. Estimated data. Data based on estimates using aerodynamic theory or other means but not verified by flight test.

7-8. Specific Conditions.

The data presented is accurate only for specific conditions listed under the title of each chart. Variables for which data are not presented, but which may affect that phase of performance, are discussed in the text. Where data are available or reasonable estimates can be made, the amount that each variable affects performance will be given.

7-9. Performance Discrepancies.

Regular use of this chapter will allow you to monitor instrument and other helicopter systems for malfunction, by comparing actual performance with planned performance. Knowledge will also be gained concerning the effects of variables for which data are not provided, thereby increasing the accuracy of performance predictions.

7-10. Free Air Temperatures.

A temperature conversion chart (Figure 7-1) is included for the purposes of converting between Fahrenheit and Celsius temperatures.

7-11. Performance Data Basis.

NOTE

The baseline external configuration for the aircraft includes communication antennas, navigation antennas, ASE antennas, fuel probe, multimode radar pod, FLIR TFU, rescue hoist, wire strike protection system, chaff/flare dispensers, IR jammers, and rotor deice system.

a. Clean Configuration. The data presented in the performance charts is primarily derived for a clean aircraft configuration with hard point mounting brackets for the external tanks system (ETS) and is based on limited test data. The clean configuration assumes all doors and windows are closed and includes the following external configuration:

NOTE

Aircraft which have an external configuration which differs from the clean configuration may be corrected for drag differences on cruise performance as discussed in Section VII DRAG.

b. ETS Installed Configuration. The data presented in the ETS installed performance charts are primarily derived for this helicopter with ETS installed, to include two 230-gallon tanks. The ETS installed configuration assumes all doors and windows are closed and includes the following external configuration:

NOTE

Aircraft which have an external configuration which differs from the ETS installed configuration may be corrected for drag differences on cruise performance as discussed in Section VII DRAG.

TEMPERATURE CONVERSION

EXAMPLE

WANTED:

FREE AIR TEMPERATURE IN DEGREES CELSIUS

KNOWN:

FREE AIR TEMPERATURE = 32°F

METHOD:

ENTER FREE AIR TEMPERATURE HERE
MOVE RIGHT TO DIAGONAL LINE
MOVE DOWN TO DEGREES CELSIUS SCALE
READ FREE AIR TEMPERATURE = 0°C

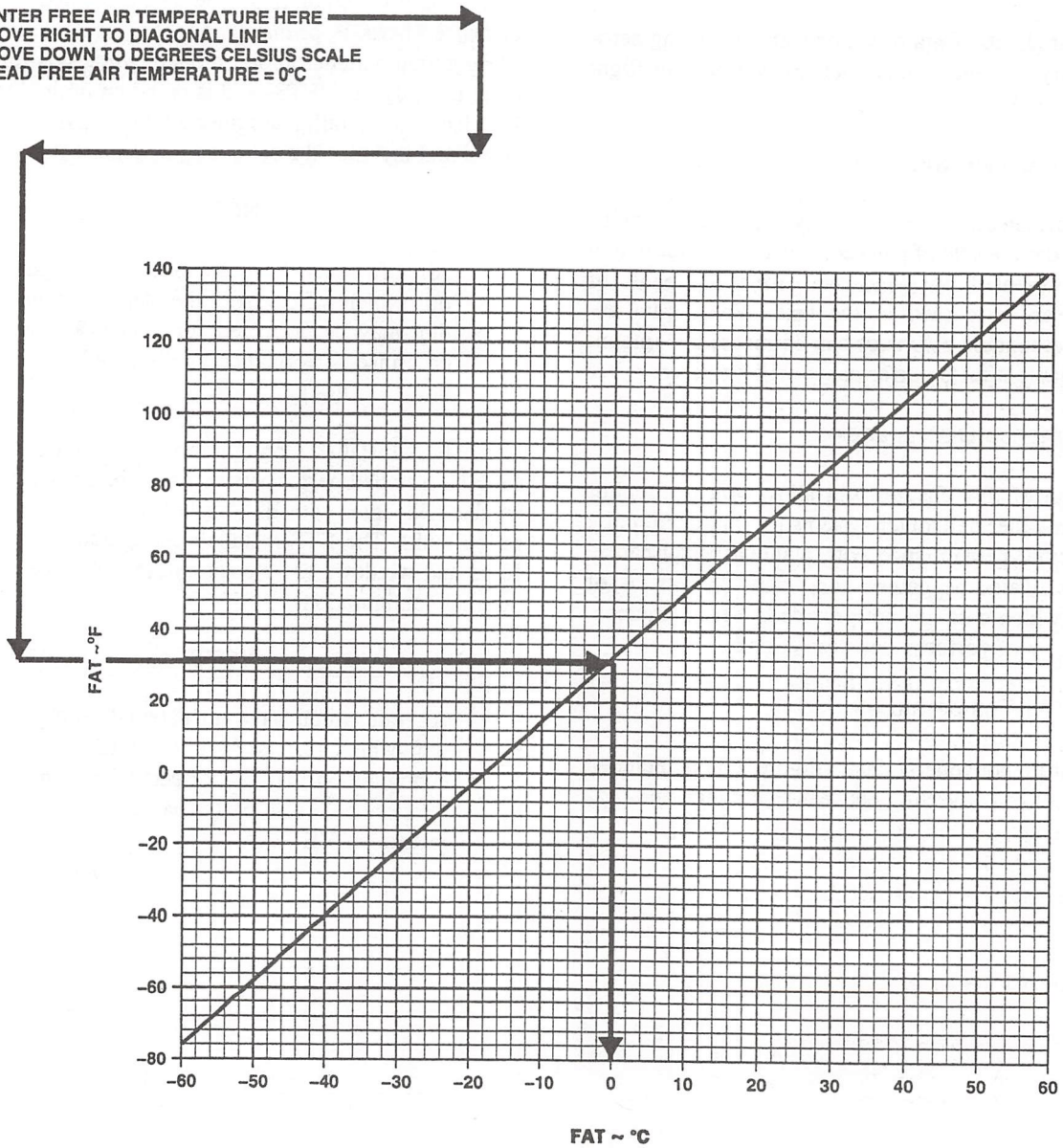

DATA BASIS: CALCULATED

AK0779
SA

Figure 7-1. Temperature Conversion Chart

Section II TORQUE AVAILABLE

7-12. Torque Factor Method.

The torque factor method provides an accurate indication of available power by incorporating ambient temperature effects on degraded engine performance. This section presents the procedure to determine the maximum single or dual engine torque available. Specification power is defined for a newly delivered low time engine. The aircraft HIT log forms for each engine provide the engine and aircraft torque factors which are obtained from the maximum power check and recorded to be used in calculating maximum torque available.

7-13. Torque Factor Terms.

The following terms are used when determining the maximum torque available for an individual aircraft:

a. Torque Ratio (TR). The ratio of torque available to specification torque at the desired ambient temperature.

b. Engine Torque Factor (ETF). The ratio of an individual engine torque available to specification torque at reference temperature of 35°C. The ETF is allowed to range from 0.90 to 1.0.

c. Aircraft Torque Factor (ATF). The ratio of an individual aircraft power available to specification power at a reference temperature of 35°C. The ATF is the average of the ETF's of both engines and its value is allowed to range from 0.9 to 1.0.

7-14. Torque Factor Procedure.

The use of the ATF or ETF to obtain the TR from Figure 7-2 for ambient temperatures between -15°C and 35°C is shown by the example. The ATF and ETF values for an individual aircraft are found on the engine HIT Log. The TR always equals 1.0 for ambient temperatures of -15°C and below, and the TR equals the ATF or ETF for temperatures of 35°C and above.

7-15. Torque Available.

CAUTION

Do not exceed the DUAL ENGINE TORQUE LIMITS in Chapter 5.

This section presents the maximum dual engine torque available for the 10-minute, 30-minute, and maximum continuous limits at zero airspeed and 100% NR for the operational range of pressure altitude and FAT. The single and dual engine transmission limits for continuous operation are also shown and should not be exceeded. When the TR equals 1.0, the torque available may be read directly from the torque available per engine scales. When TR is less than 1.0, the actual torque available is determined by multiplying the specification torque available by the TR (example for TR = 0.98: 90% TQ x 0.98 = 88.2% TQ). The torque conversion chart (Figure 7-3) is provided to convert specification data to actual torque available.

7-16. Torque Available - 10 Minutes.

Figure 7-4 presents the specification torque available per engine for the 10-minute limit. This is the maximum dual engine torque available and is set by the engine temperature limiter in dual engine operation. For one engine operation, the pilot must manually maintain the 10-minute ENG TEMP limit.

7-17. Torque Available - 30 Minutes.

Figure 7-4 presents the specification torque available per engine for the 30-minute limit. The pilot must manually maintain the 30-minute ENG TEMP limit.

7-18. Maximum Continuous Torque Available.

Figure 7-4 presents the maximum specification torque available per engine for continuous operation. The pilot must manually maintain the maximum continuous ENG TEMP limit.

7-19. Engine Bleed Air.

With engine bleed air on, the available torque per engine is reduced as follows:

a. Engine anti-ice on: -18% TQ

(example: 90% TQ -18% TQ = 72% TQ).

b. Cockpit heater on: -4% TQ.

c. Both on: -22% TQ.

TORQUE FACTOR

100% NR

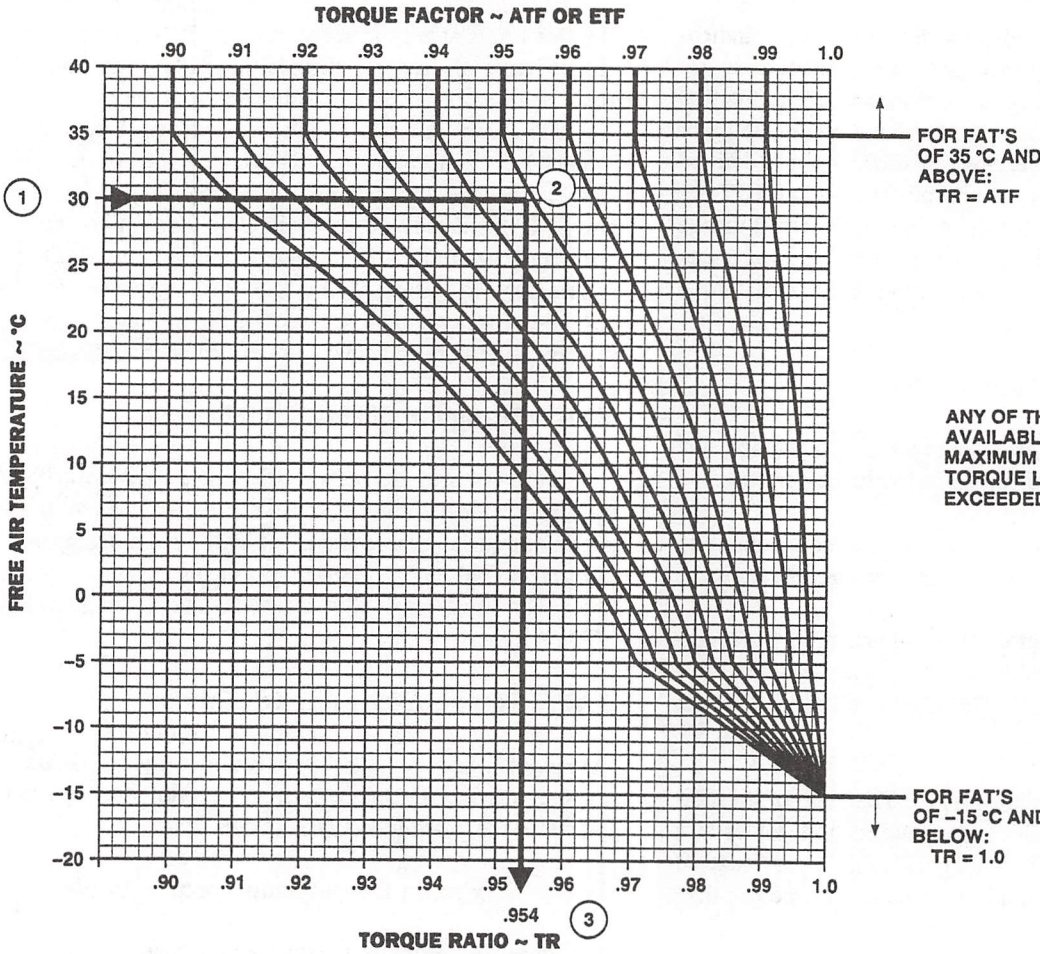

NOTE

ANY OF THE THREE TORQUE AVAILABLE CHARTS MAY BE USED. MAXIMUM ALLOWABLE DUAL ENGINE TORQUE LIMITS SHALL NOT BE EXCEEDED.

EXAMPLE

WANTED:

TORQUE RATIO AND MAXIMUM TORQUE AVAILABLE – 10 MINUTE LIMIT

KNOWN:

ATF = 0.95
PRESSURE ALTITUDE = 6000 FT.
FAT = 30 °C

METHOD:

TO OBTAIN TORQUE RATIO:

(1) ENTER TORQUE FACTOR CHART AT KNOWN FAT.

(2) MOVE RIGHT TO THE ATF VALUE.

(3) MOVE DOWN, READ TORQUE RATIO = 0.954.

TO DETERMINE SPECIFICATION TORQUE AVAILABLE – 10 MINUTE LIMITS:

(4) ENTER MAXIMUM TORQUE AVAILABLE CHART AT KNOWN FAT (FIGURE 7–4).

(5) MOVE RIGHT TO KNOWN PRESSURE ALTITUDE.

(6) MOVE DOWN , MOVE SPECIFICATION TORQUE = 98%.

TO OBTAIN ACTUAL TORQUE VALVE AVAILABLE FROM THE TORQUE CONVERSION CHART:

(7) ENTER TORQUE CONVERSION CHART FIGURE 7–3 AT % TORQUE OBTAINED FROM FIGURE 7–4.

(8) MOVE UP TO TORQUE RATIO OBTAINED FROM FIGURE 7–2.

(9) MOVE LEFT, READ MAXIMUM TORQUE AVAILABLE – 10 MINUTE LIMIT = 93%.

DATA BASE: CALCULATED

AK0780
SA

Figure 7-2. Aircraft Torque Factor

TORQUE CONVERSION

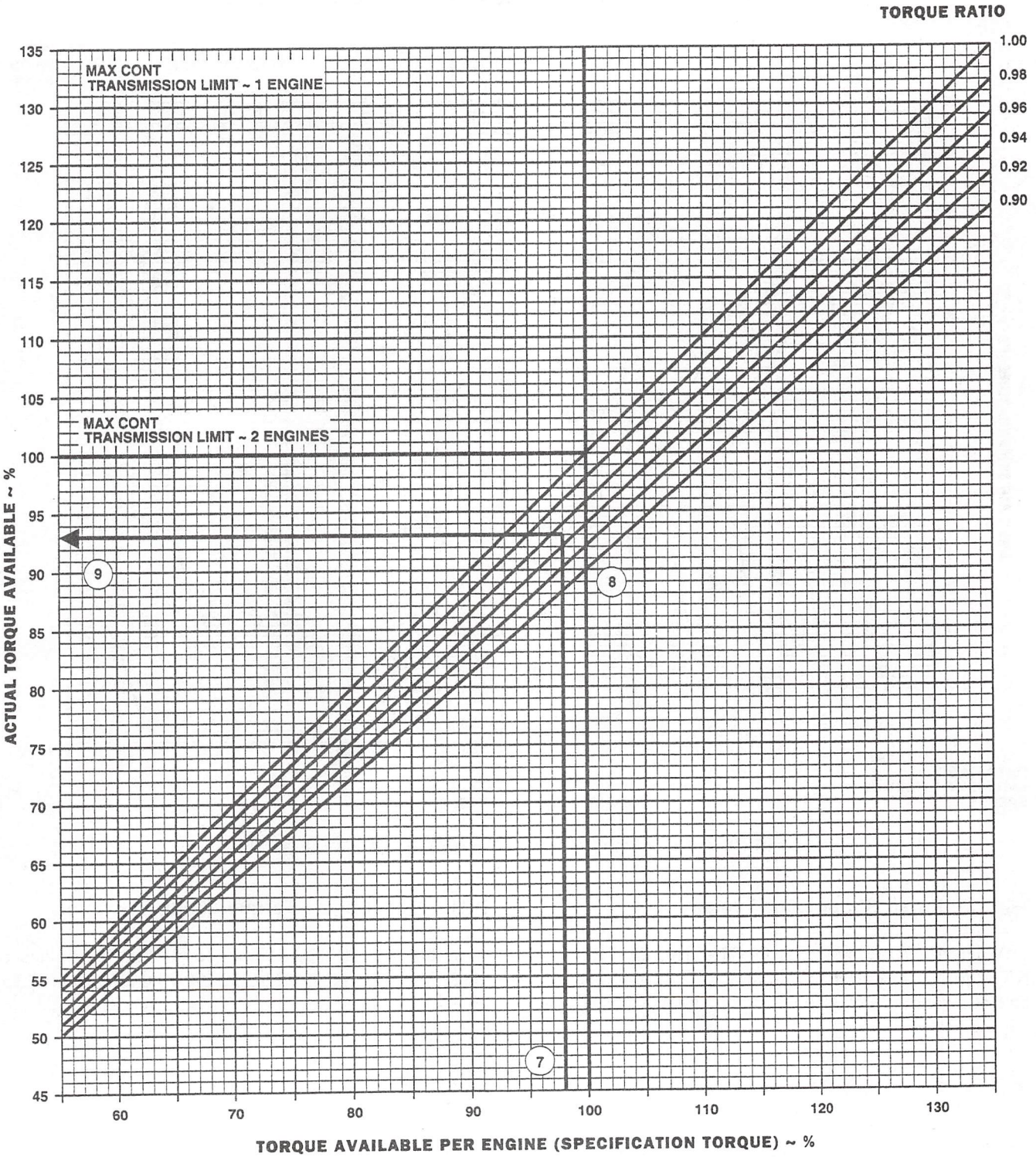

DATA BASIS: CALCULATED

AK5101
SA

Figure 7-3. Torque Conversion Chart

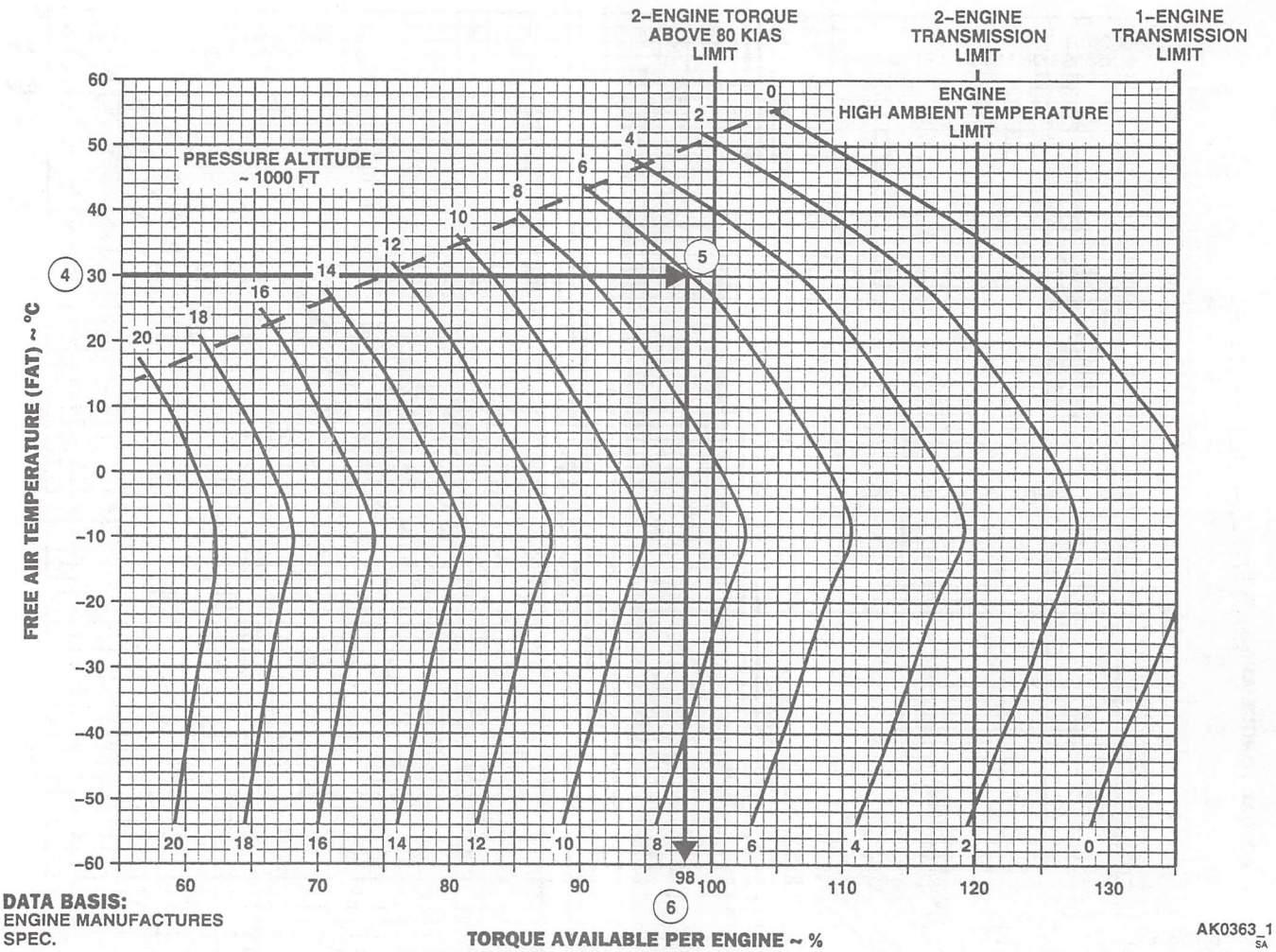

Figure 7-4. Maximum Torque Available (Sheet 1 of 3)

7-20. Infrared Suppressor System.

When the IR suppressor is OPERATING IN THE BENIGN MODE (exhaust baffles removed) the torque available at a constant ENG TEMP is increased about 1% TQ.

7-21. Dual Engine Torque Limits.

Sustained dual engine power levels shall be limited to the DUAL ENGINE TORQUE LIMITS presented in Chapter 5.

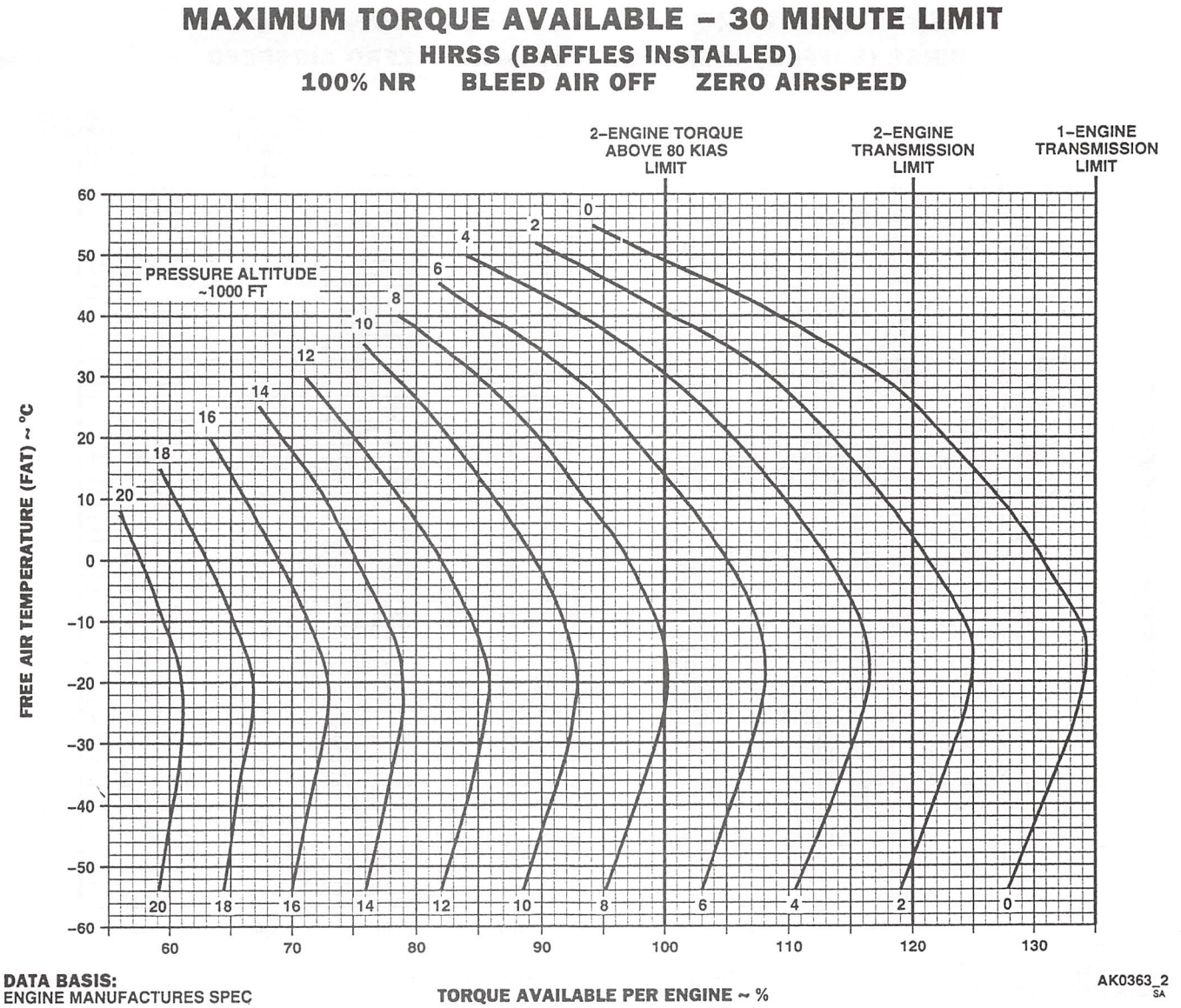

Figure 7-4. Maximum Torque Available (Sheet 2 of 3)

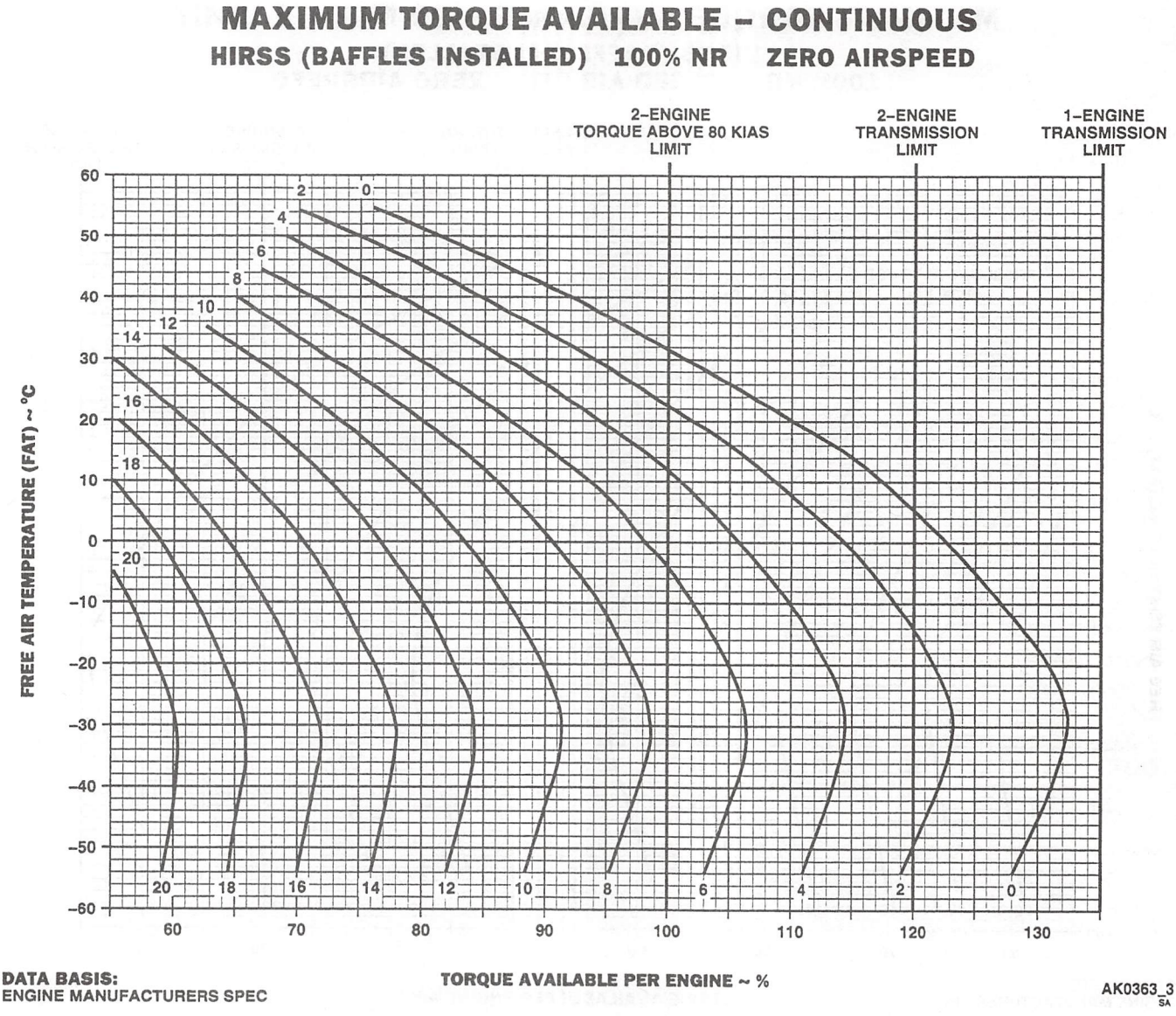

Figure 7-4. Maximum Torque Available (Sheet 3 of 3)

Section III HOVER

7-22. Hover Charts.

These charts (Figure 7-5) provides the torque required to hover at various altitudes, FAT, and gross weight conditions. Single and dual engine torque requirements at various wheel heights both in ground effect and out-of-ground effect may be determined from this chart. Maximum transmission limits for single and dual engine operation are also shown. After determining torque required to hover, refer to the desired maximum torque available chart to determine that enough torque is available under the given conditions. If the torque available is less than torque required to hover, the gross weight must be reduced. The maximum hover capability occurs when the torque required to hover and the maximum torque available are equal. To determine maximum hover capability, follow the same procedure for determining torque required to hover. To determine maximum gross weight, enter the indicated torque scale on the hover chart at the determined maximum torque available and move across to intersect the vertical trace previously determined. The intersection is the maximum gross weight for hovering at the maximum power limit.

7-23. Maximum Gross Weight to Hover Chart OGE.

The maximum gross weight for hover charts (Figure 7-6) provides a means of finding the maximum gross weight at which the helicopter can be hovered OGE in zero wind for combinations of pressure altitude with FAT. The maximum gross weight for the clean configuration may be determined from Figure 7-6, sheets 1 and 2, ATF values 1.0 and 0.9 respectively. The ETS configuration is obtained from Figure 7-6, sheets 3 and 4, for ATF values 1.0 and 0.9 respectively. FATs of -15°C and below provide the same gross weight capability. Aircraft with ATF values between 1.0 and 0.9 require interpolation to obtain the maximum gross weight to hover as shown on Figure 7-6 and the example below.

Example calculation for maximum gross weight when ATF is between 1.0 and 0.9:

ATF 1.0 maximum gross weight - (ATF 1.0 maximum gross weight - ATF 0.9 maximum gross weight)(ATF 1.0 - current ATF value)(10) = maximum gross weight

20500 - (20500 - 19400)(1.0 - .96)(10) =

20500 - (1100)(0.04)(10) =

20500 - (1100)(0.4) =

20500 - 440 = 20060

Maximum gross weight for ATF 0.96 is 20060 pounds.

7-24. Maximum Gross Weight to Hover Chart IGE.

The maximum gross weight for hover charts (Figure 7-7) may be used to determine the maximum gross weight to hover at various wheel heights once the OGE gross weight is known for either the clean (Figure 7-7, sheet 1) or ETS installed configuration (Figure 7-7, sheet 2), respectively.

EXAMPLE

WANTED:

A. TORQUE REQUIRED TO HOVER OGE AND AT A WHEEL HEIGHT OF 10 FEET

B. MAXIMUM GROSS WEIGHT TO HOVER OGE

KNOWN:

A. FAT = 30°C
PRESSURE ALTITUDE = 3,000 FEET
GROSS WEIGHT = 19,500 POUNDS

B. ATF = 1.0
FAT = 20°C
PRESSURE ALTITUDE = 5,000 FEET
MAXIMUM TORQUE AVAILABLE = 107%

METHOD:

A. ENTER HOVER CHART AT KNOWN FAT (30°C)..... (A) TO 3,000 FEET PRESSURE ALTITUDE, MOVE DOWN THROUGH GROSS WEIGHT LINES TO DESIRED GROSS WEIGHT (19,5000 POUNDS). MOVE LEFT TO INDICATED TORQUE/ENGINE % (OGE) SCALE AND READ OGE HOVER TORQUE (97%). MOVE DOWN FROM INTERSECTION OF 10 FEET HOVER LINE AND HORIZONTAL LINE TO READ TORQUE REQUIRED TO HOVER 10 FEET (80%).

B. ENTER INDICATED TORQUE/ENGINE (IGE)..... (B) SCALE AT MAXIMUM TORQUE AVAILABLE (107%), MOVE UP TO OGE LINE. ENTER CHART AT KNOWN FAT (20°C)..... (C) , MOVE RIGHT TO PRESSURE ALTITUDE LINE (5,000 FT). MOVE DOWN FROM PRESSURE ALTITUDE LINE AND MOVE RIGHT FROM OGE LINE. WHERE LINES INTERSECT, READ MAXIMUM GROSS WEIGHT TO HOVER OGE (20,300 POUNDS).

Figure 7-5. Hover (Sheet 1 of 3)

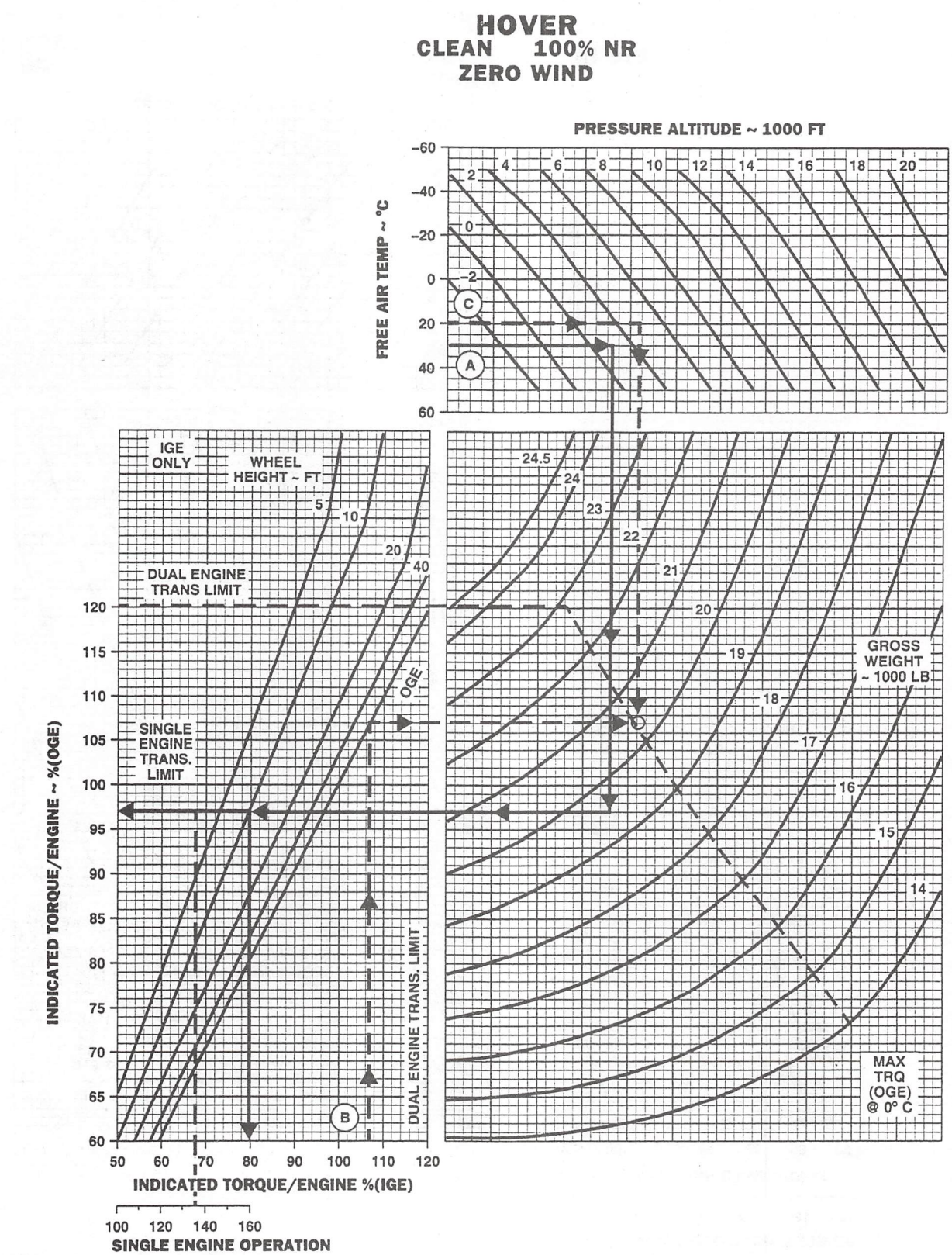

DATA BASE: FLIGHT TEST

AK0364_1
SA

Figure 7-5. Hover (Sheet 2 of 3)

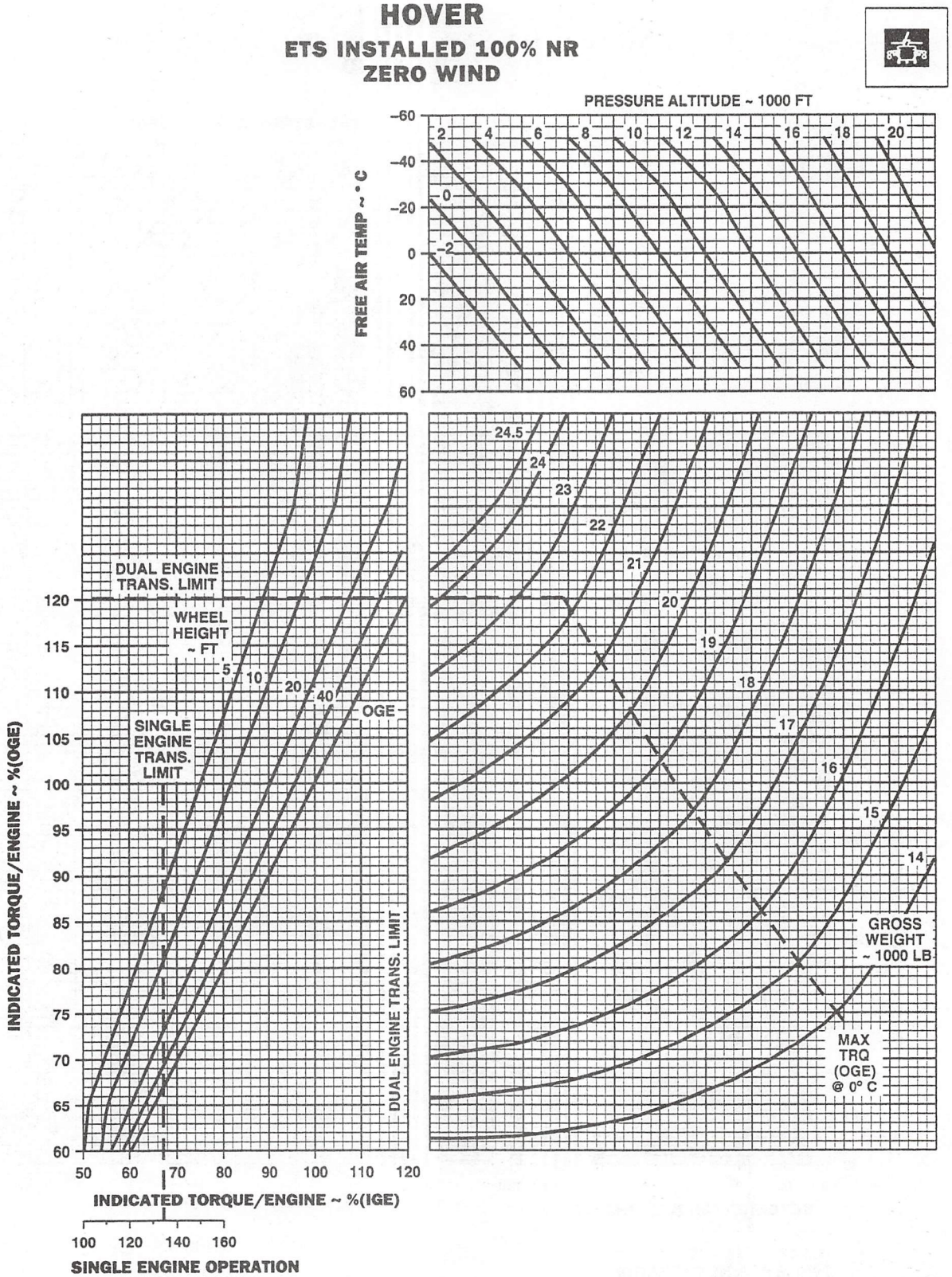

DATA BASIS: FLIGHT TEST

AK0364_2
SA

Figure 7-5. Hover (Sheet 3 of 3)

MAXIMUM GROSS WEIGHT TO HOVER OGE

HIRSS (BAFFLES INSTALLED) CLEAN CONFIGURATION
MAXIMUM POWER (10 MIN LIMIT) OR 120% TRANSMISSION LIMIT
ATF = 1.0 100% NR

EXAMPLE

WANTED:

MAXIMUM GROSS WEIGHT TO HOVER OGE.

KNOWN:

A. FAT = 30 °C
B. PRESSURE ALTITUDE = 4,000 FT
   A. AFT = 1.0 CLEAN CONFIGURATION
   B. ATF = 9.6

METHOD:

A. ENTER HOVER CHART AT KNOWN PRESSURE ALTITUDE (4,000 FT), MOVE RIGHT TO FAT LINE (30 °C), MOVE DOWN TO READ MAXIMUM GROSS WEIGHT (20,500) FOR ATF = 1.0.

B. FOR ATFs BETWEEN 0.9 AND 1.0, ENTER SHEET 2 AT KNOWN PRESSURE ALTITUDE (4000), MOVE RIGHT TO FAT LINE (30°C), MOVE DOWN TO READ MAXIMUM GROSS WEIGHT (19400) FOR ATF = 0.9
CALCULATE GROSS WEIGHT FOR ATF = 0.96 AS FOLLOWS:

(20500) – (20500–19400)(1.0–.96)(10) =
20500 – (1100)(.04)(10) =
20500 – (1100)(0.4) =
20500 – 440 = 20060 LBS

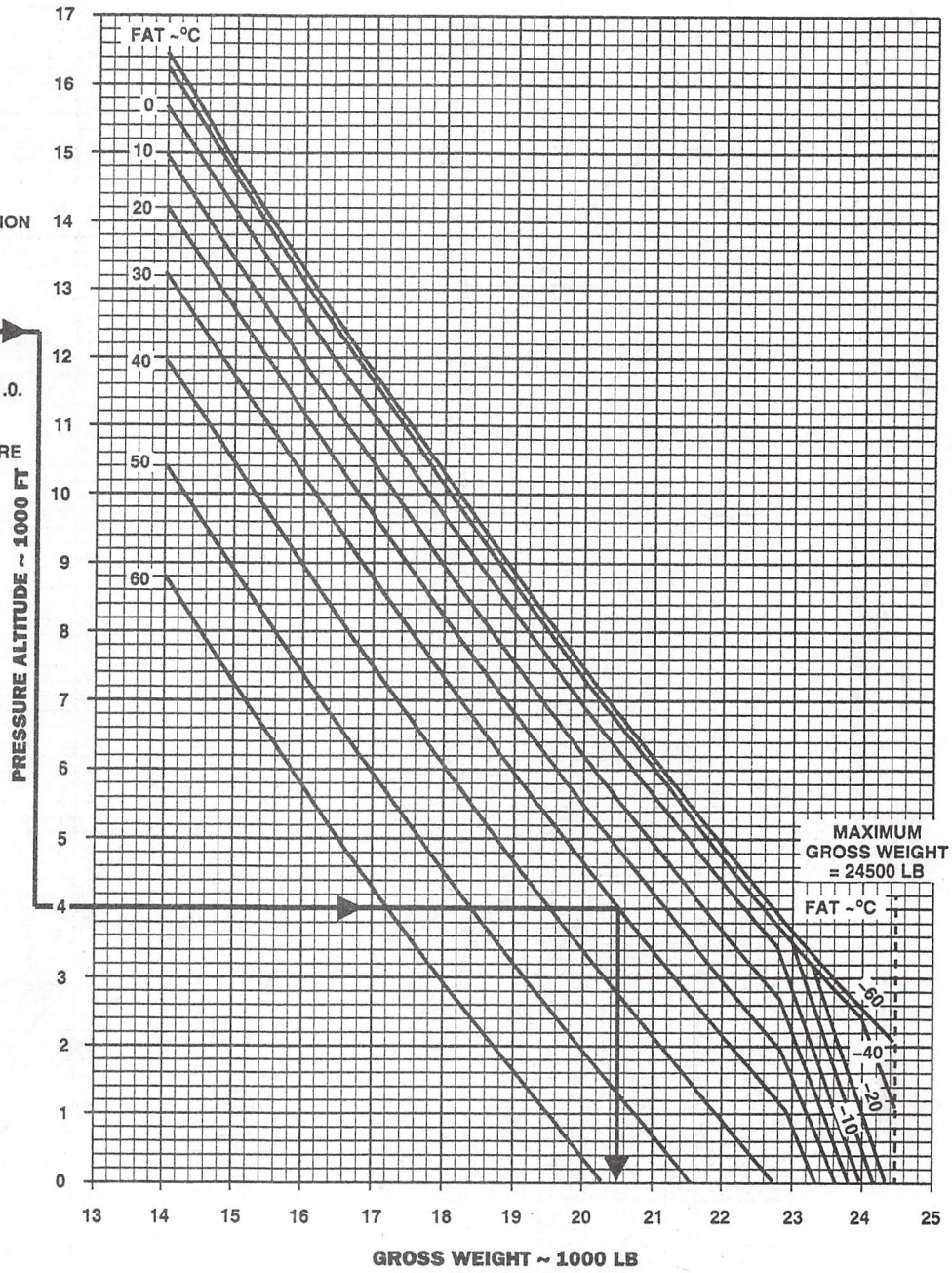

AK0286_1
SA

Figure 7-6. Maximum Gross Weight to Hover OGE (Sheet 1 of 4)

MAXIMUM GROSS WEIGHT TO HOVER OGE

HIRSS (BAFFLES INSTALLED) CLEAN CONFIGURATION
MAXIMUM POWER (10 MIN LIMIT) OR 120% TRANSMISSION LIMIT
ATF = 0.9 100% NR

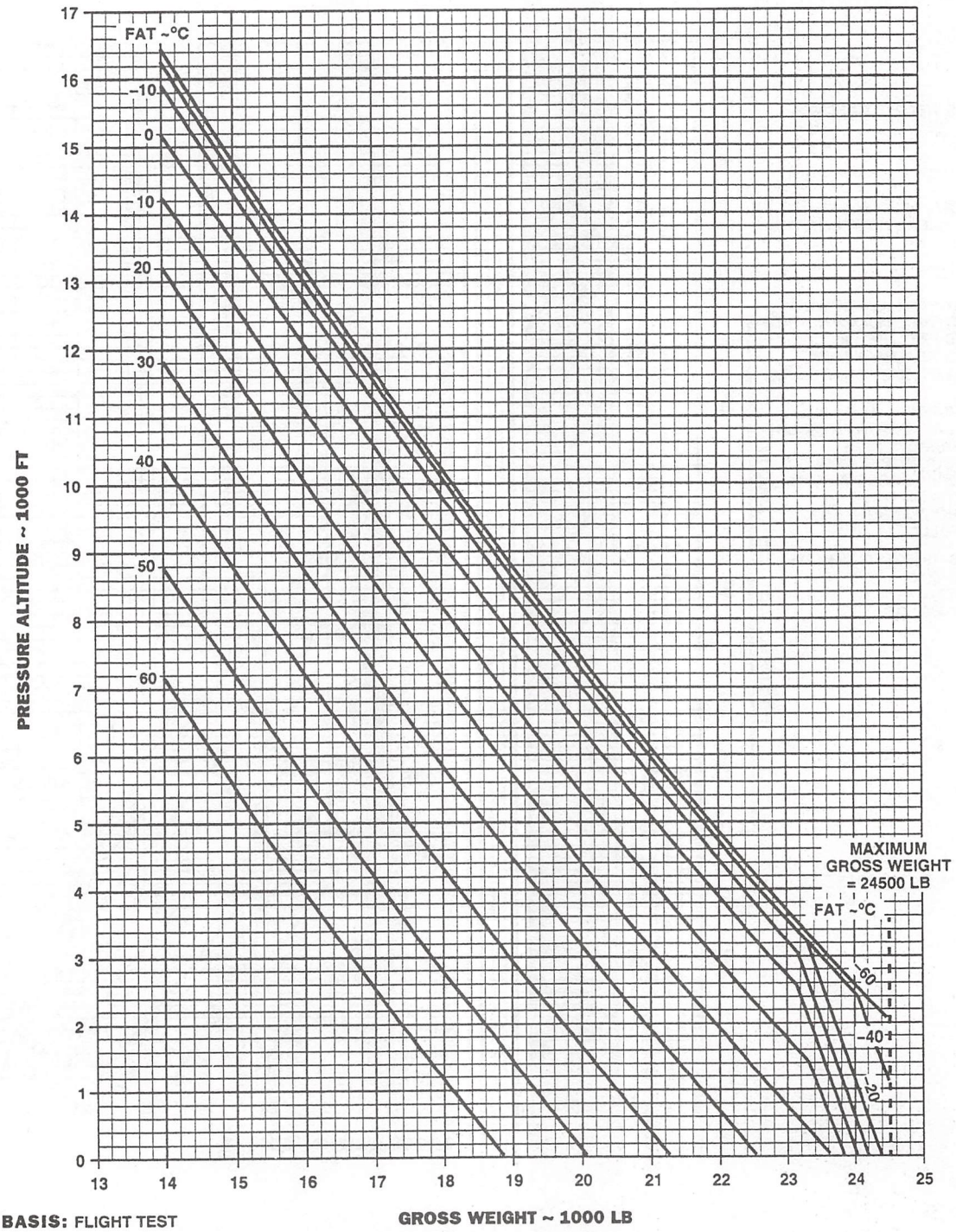

DATA BASIS: FLIGHT TEST

AK0286_2
SA

Figure 7-6. Maximum Gross Weight to Hover OGE (Sheet 2 of 4)

MAXIMUM GROSS WEIGHT TO HOVER OGE

HIRSS (BAFFLES INSTALLED) ETS INSTALLED
MAXIMUM POWER (10 MIN LIMIT) OR 120% TRANSMISSION LIMIT
ATF = 1.0 100% NR

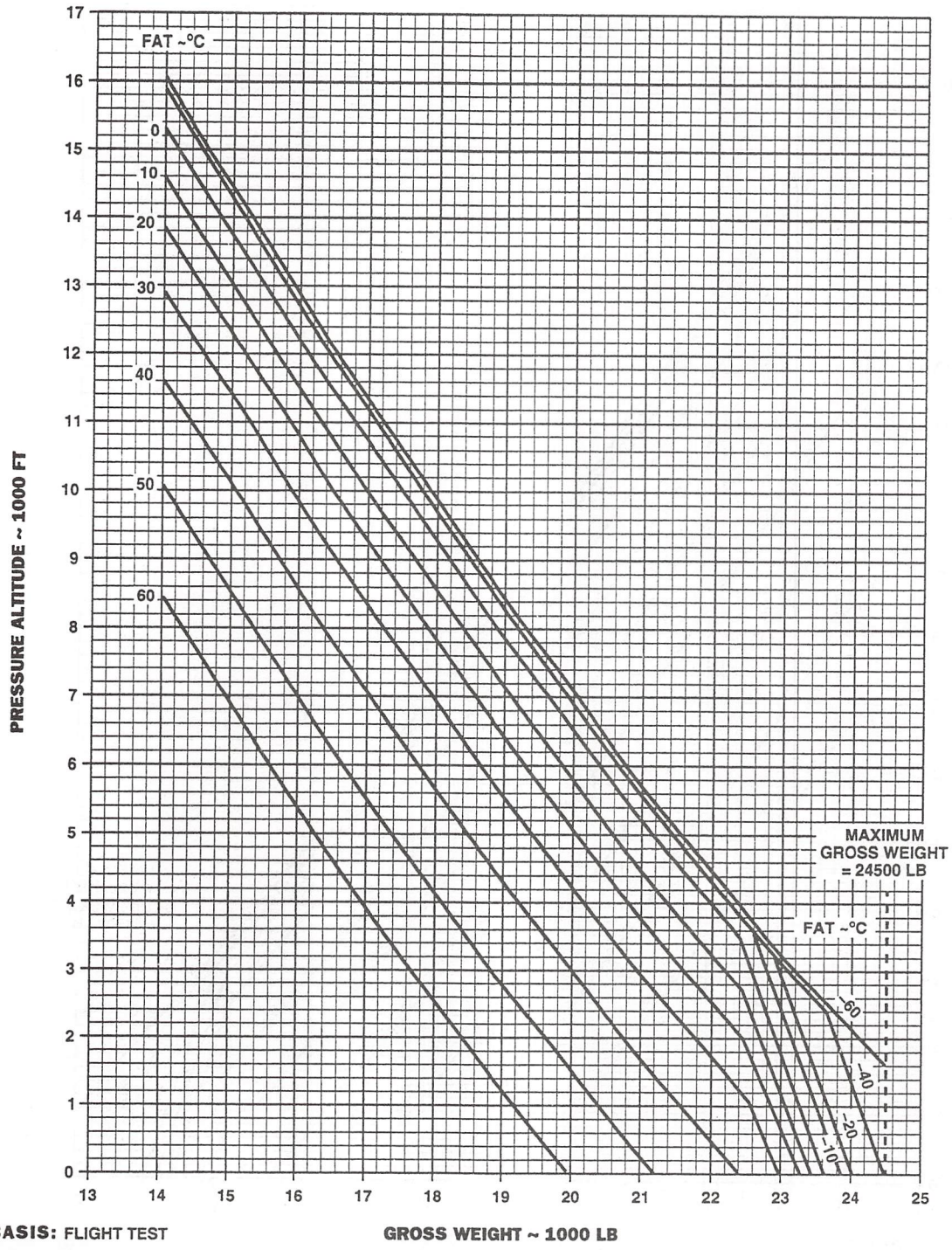

DATA BASIS: FLIGHT TEST

AK0286_3 SA

Figure 7-6. Maximum Gross Weight to Hover OGE (Sheet 3 of 4)

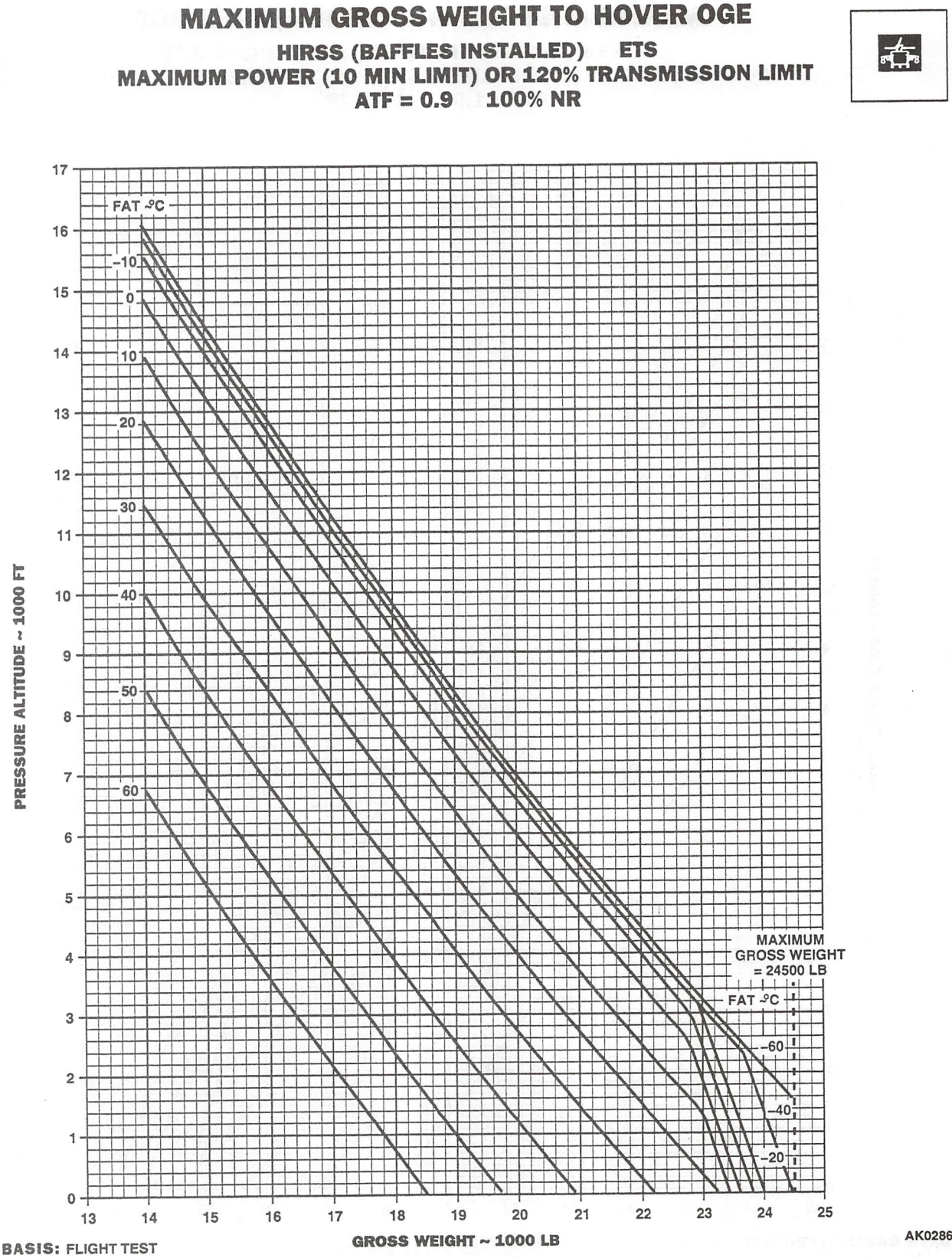

Figure 7-6. Maximum Gross Weight to Hover OGE (Sheet 4 of 4)

MAXIMUM GROSS WEIGHT TO HOVER IN GROUND EFFECT

CLEAN CONFIGURATION 100% NR

EXAMPLE

WANTED:

MAXIMUM GROSS WEIGHT
TO HOVER AT 20 FEET
WHEEL HEIGHT

KNOWN:

MAXIMUM OGE GROSS WEIGHT
AT 4000 FT / ~ 20°C WAS 21200 LB
FROM FIGURE 7-6

METHOD:

ENTER CHART ON OGE GROSS WEIGHT SCALE AT 21200 LB. MOVE RIGHT UP TO 20 FT WHEEL HEIGHT LINE. MOVE DOWN READ IGE GROSS WEIGHT = 22560 LB.

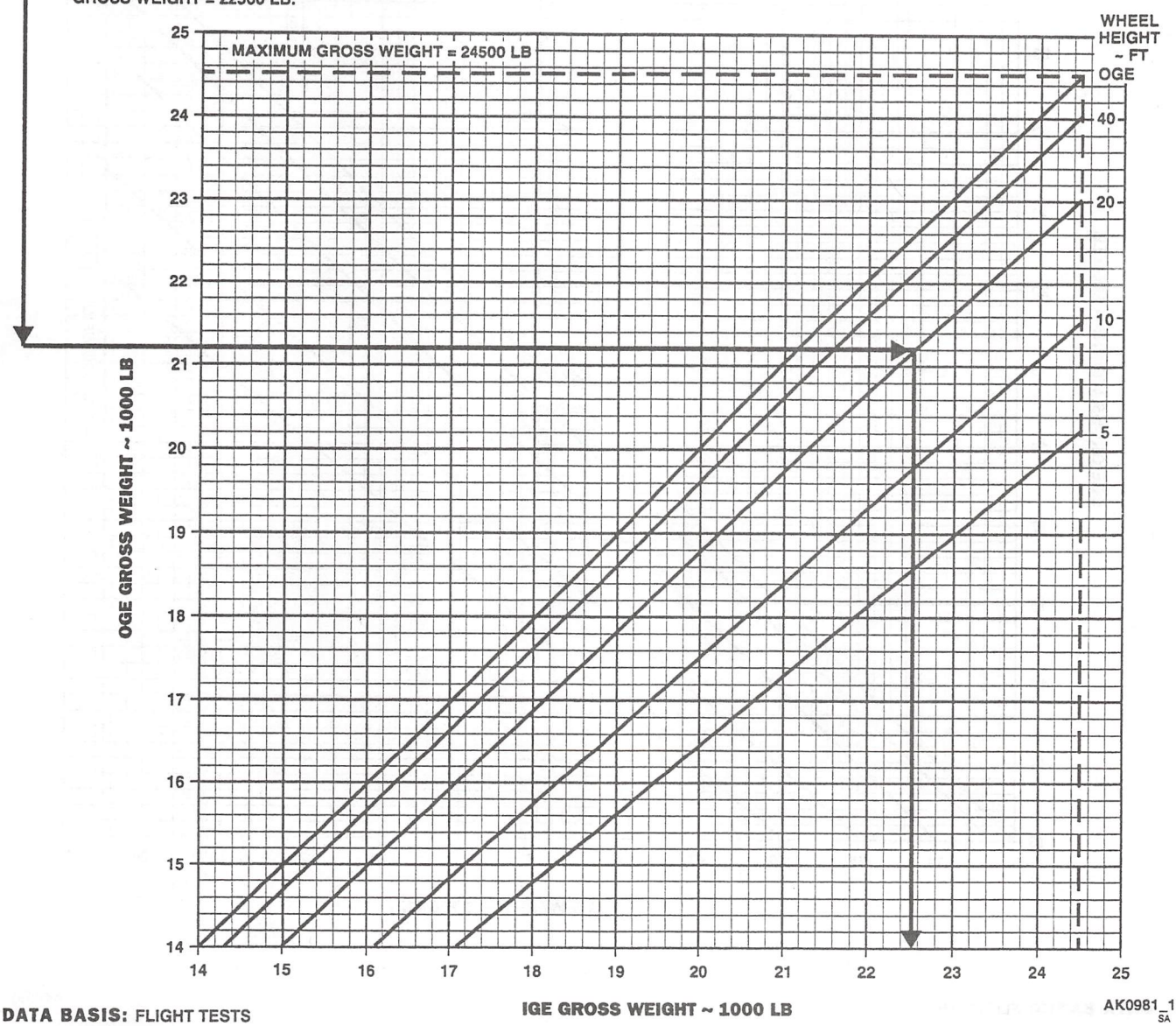

DATA BASIS: FLIGHT TESTS

AK0981_1 SA

Figure 7-7. Maximum Gross Weight to Hover IGE (Sheet 1 of 2)

MAXIMUM GROSS WEIGHT TO HOVER IN GROUND EFFECT

ETS INSTALLED 100% NR

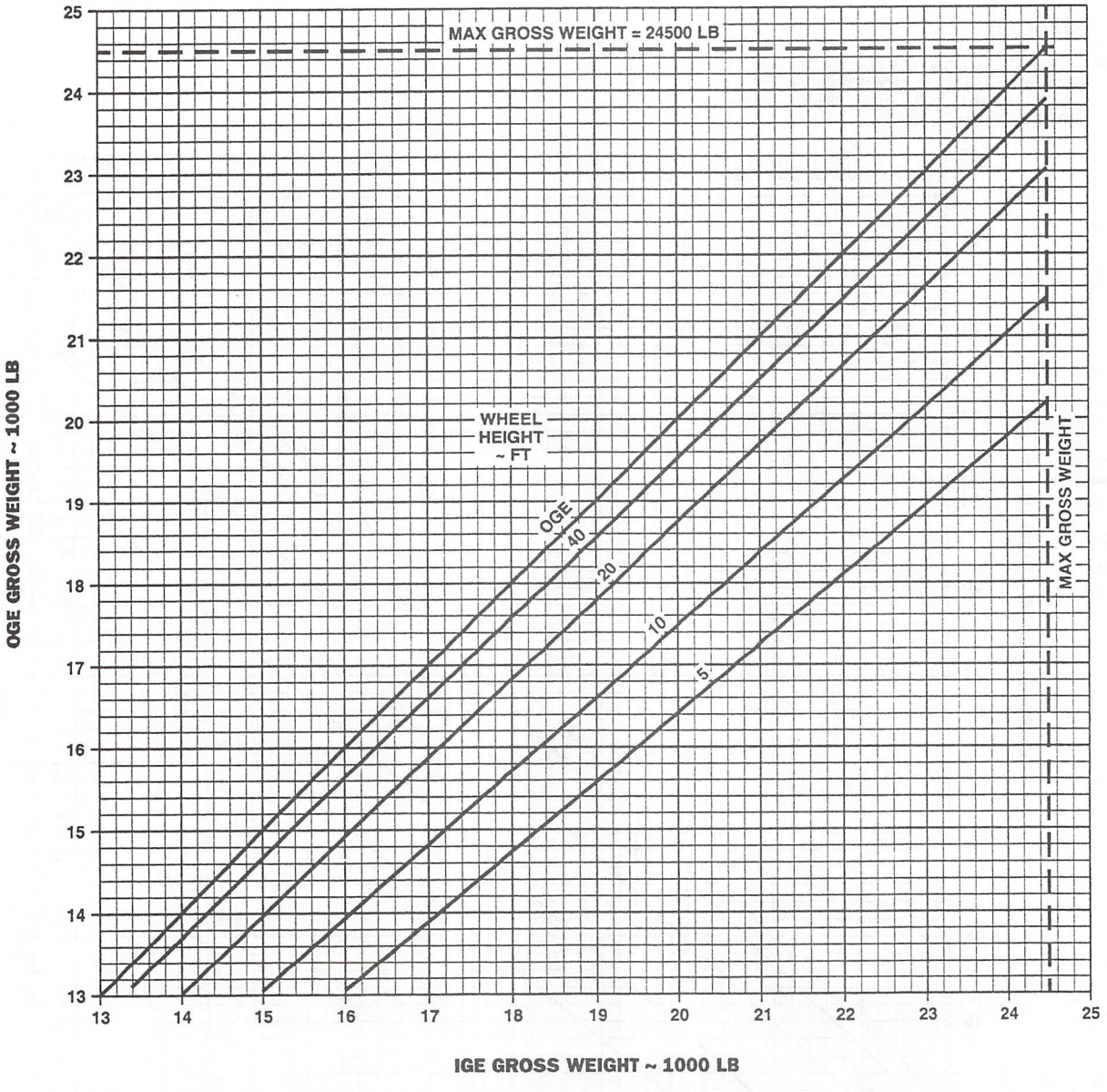

DATA BASIS: FLIGHT TEST

AK0981_2
SA

Figure 7-7. Maximum Gross Weight to Hover IGE (Sheet 2 of 2)

Section IV TAKEOFF

7-25. Description.

The takeoff chart (Figure 7-8) provides the distances required to clear a 50-foot obstacle, based upon maximum hover wheel height capabilities determined from gross weights, pressure altitude and FAT conditions, and torque available or placard limits. Distances are contingent on the use of a takeoff technique as follows: The takeoff profile shown on Figure 7-8 is started with a level flight acceleration from a 5-foot hover, with rotation to climbout attitude initiated at 5 knots below climbout airspeed.

NOTE

The maximum hover heights shown are only a measure of the helicopter's climb capability and do not imply that a hover height greater than 5 feet should be used during actual takeoff.

7-26. Use of Chart.

The primary use of the chart is illustrated by the example.

a. To determine the distance required to clear a 50-foot obstacle it is necessary to know maximum hover height and climbout true airspeed. Calculation of maximum hover height is described in Section III, Hover. Select a climbout indicated airspeed of 40 KIAS or greater and determine corresponding true airspeed from applicable cruise chart in Section V.

NOTE

Indicated airspeeds below 40 KIAS are unreliable. Airspeed conversion data KIAS to KTAS for speeds above 40 KIAS are provided in Section V Cruise.

b. Before takeoff a hover check may be made to verify the hover capability. If winds are present, the hover check may disclose that the helicopter can actually hover at a greater wheel height than the calculated value, since the hover chart is based upon calm wind conditions. However, the calculated value should be used to determine the takeoff distance required.

7-27. Conditions.

a. The takeoff chart is based on calm wind conditions. Since the surface wind velocity and direction cannot be accurately predicted, all takeoff planning should be based on calm wind conditions. Takeoff into the wind will improve takeoff performance.

b. Takeoff performance data can be obtained based on the use of maximum torque available chart.

TAKEOFF

AT MAXIMUM HOVER CAPABILITY
LEVEL ACCELERATION/CLIMB TECHNIQUE
ZERO WIND MAXIMUM TORQUE AVAILABLE 100% NR

EXAMPLE

WANTED:

DISTANCE TO CLEAR 50–FT OBSTACLE

KNOWN:

MAXIMUM HOVER HEIGHT AS DETERMINED FROM THE HOVER CHART = 12 FT

METHOD:

ENTER CHART MAXIMUM HOVER HEIGHT MOVE RIGHT TO CLIMB OUT TRUE AIRSPEED 50 KIAS. MOVE DOWN TO READ DISTANCE TO CLEAR 50–FOOT OBSTACLE = 852 FEET WHEN INITIATING NORMAL TAKEOFF TECHNIQUE FROM 5–FOOT HOVER

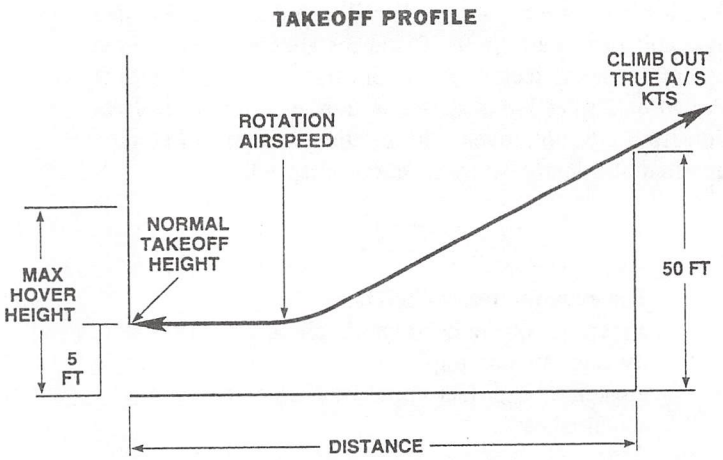

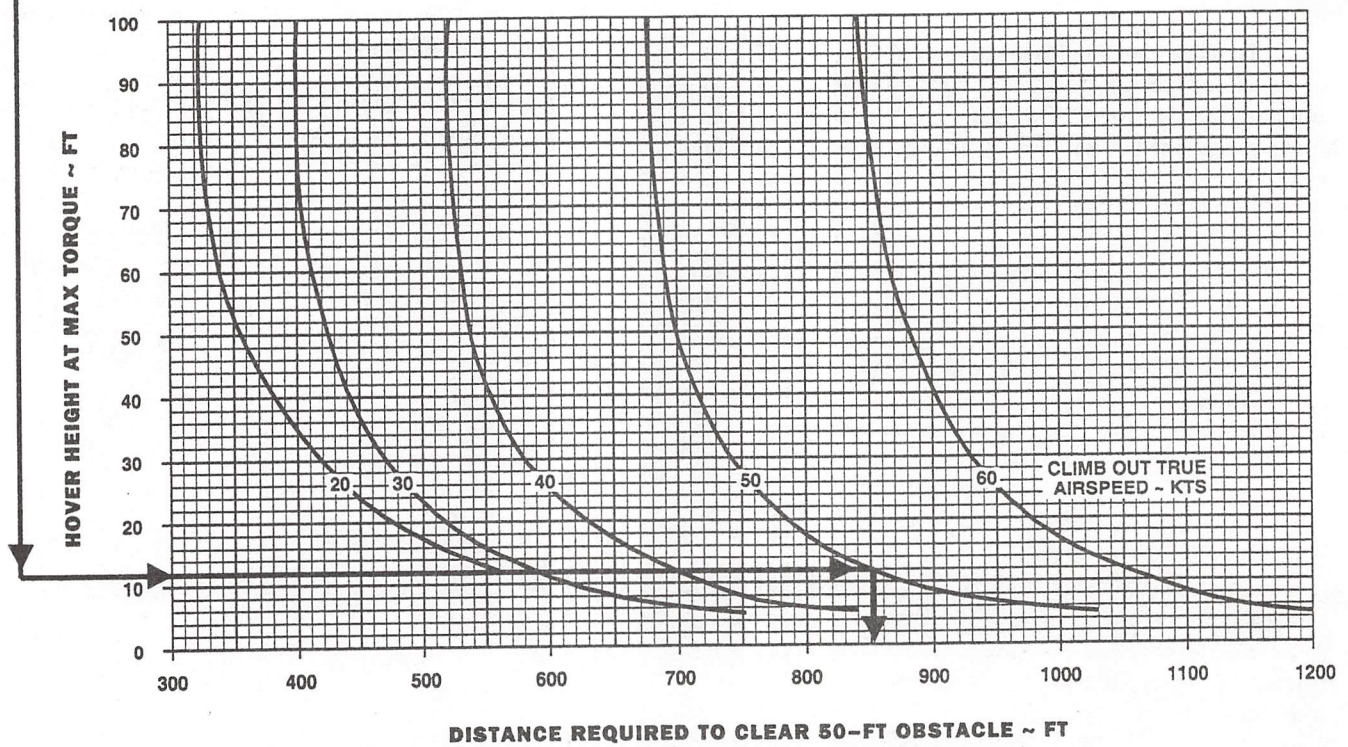

AK0782
SA

DATA BASIS: CALCULATED

Figure 7-8. Takeoff

Section V CRUISE

7-28. Description.

The cruise charts (Figures 7-9 through 7-31) present torque required and total fuel flow as a function of airspeed, altitude, temperature, and gross weight at 100% rotor speed. Scales for both true airspeed and indicated airspeed are presented. The baseline aircraft configuration for these charts was the clean and ETS installed configurations as defined in Section I. Each cruise chart also presents the change in torque (Δ TQ) required for 10 square feet of additional flat plate drag with a dashed line on a separate scale. This line is utilized to correct torque required for external loads as discussed in Section VII Drag. Maximum level flight airspeed (Vh) is obtained at the intersection of gross weight arc and torque available - 10 minutes or the 100% torque limit, whichever is lower. Airspeeds that will produce maximum range, maximum endurance, and maximum rate of climb are also shown. Cruise charts are provided from sea level to 20,000 feet pressure altitude in units of 2,000 feet. Each figure number represents a different altitude. The charts provide cruise data for free air temperatures from -50°C to 60°C, in units of 10°. Charts with FATs that exceed the engine ambient temperature limits by more than 10°C are deleted.

7-29. Use of Charts.

The primary uses of the charts are illustrated by the examples of Figure 7-9. To use the charts, it is usually necessary to know the planned pressure altitude, estimated free air temperature, planned cruise speed, true airspeed, and gross weight. First, select the proper chart on the basis of pressure altitude and FAT. Enter the chart at the cruise indicated airspeed, move right and read true airspeed, move left to the gross weight, move down and read torque required, and then move up and read associated fuel flow. Maximum performance conditions are determined by entering the chart where the maximum range line or the maximum endurance and rate of climb line intersects the gross weight line; then read airspeed, fuel flow, and torque required. Normally, sufficient accuracy can be obtained by selecting the chart nearest the planned cruising altitude and FAT, or more conservatively by selecting the chart with the next higher altitude and FAT. If greater accuracy is required, interpolation between altitudes and/or temperatures is permissible. To be conservative, use the gross weight at the beginning of the cruise flight. For greater accuracy on long flights, it is preferable to determine cruise information for several flight segments to allow for the decreasing gross weight.

a. Airspeed. True and indicated airspeeds are presented at opposite sides of each chart. On any chart, indicated airspeed can be directly converted to true airspeed (or vice versa) by reading directly across the chart without regard for the other chart information. The level flight airspeed calibration for the clean and ETS installed configuration were used to convert indicated airspeed to true airspeed for the two configurations, respectively. The airspeed correction chart may be used to obtain indicated airspeed in a climb and an autorotation.

b. Torque. Since pressure altitude and temperature are fixed for each chart, torque required varies according to gross weight and airspeed. The torque and torque limits shown on these charts are for dual engine operation. The maximum torque available is presented on each chart as either the transmission torque limit, 100% limit above 80 KIAS or torque available - 10 minutes for both ATF 1.0 and 0.9 values. The maximum torque available for aircraft with an ATF value between these must be interpolated. The continuous torque available values shown represent the minimum torque available for ATF of 0.95 or greater. For ATFs less than 0.95 maximum continuous torque available may be obtained from Figure 7-4, Sheet 3 of 3. An increase or decrease in torque required because of a drag area change is calculated by adding or subtracting the change in torque from the torque on the curve, and then reading the new fuel flow total.

c. Fuel Flow. Fuel flow scales are provided opposite the torque scales. On any chart, torque may be converted directly to fuel flow without regard to other chart information. Data shown in this section is for two-engine operation. For single engine fuel flow, refer to Section IX Fuel Flow. When bleed-air is being extracted, fuel flow increases as follows:

(1) ENG ANTI-ICE ON - About 100 pounds per hour. (Example: 760 pounds per hour + 100 pounds per hour = 860 pounds per hour.)

(2) HEATER ON - About 12 pounds per hour.

(3) Both on - About 112 pounds per hour.

(4) When the hover infrared suppressor system (HIRSS) is installed and operating in the benign mode (exhaust baffles removed), the dual-engine fuel flow will decrease about 14 pounds per hour.

d. Maximum Range. The maximum range lines (MAX RANGE) indicate the combinations of gross weight and airspeed that will produce the greatest flight range per pound of fuel under zero wind conditions. When maximum range airspeed line is above the maximum torque available, the resulting maximum airspeed should be used for maximum range. A method of estimating maximum range speed in winds is to increase indicated airspeed by 2.5 knots per each 10 knots of effective headwind (which reduces flight time and minimizes loss in range) and decrease indicated airspeed by 2.5 knots per 10 knots of effective tailwind for economy.

e. Maximum Endurance and Rate of Climb. The maximum endurance and rate of climb lines (MAX END and R/C) indicate the combinations of gross weight and airspeed that will produce the maximum endurance and the maximum rate of climb. The torque required for level flight at this condition is a minimum, providing a minimum fuel flow (maximum endurance) and a maximum torque change available for climb (maximum rate of climb).

f. Change in Frontal Area. Since cruise information is given for clean and ETS installed configurations, adjustments to torque should be made when operating with external sling loads or aircraft external configuration changes that are different from the baseline configuration. To determine the change in torque, first obtain the appropriate multiplying factor from the drag load chart (Figure 7-33), then enter the cruise chart at the planned cruise true airspeed, move right to the broken Δ TQ line, and move up and read Δ TQ. Multiply Δ TQ by the multiplying factor to obtain change in torque, then add or subtract change in torque from torque required for the primary mission configuration. Enter the cruise chart at resulting torque required, move up, and read fuel flow. If the resulting torque required exceeds the governing torque limit, the torque required must be reduced to the limit. The resulting reduction in airspeed may be found by subtracting the change in torque from the torque limit; then enter the cruise chart at the reduced torque, and move up to the gross weight. Move left or right to read true airspeed or indicated airspeed. The engine torque setting for maximum range obtained from the clean configuration cruise chart will generally result in cruise at best range airspeed for the higher drag configuration. To determine the approximate airspeed for maximum range for alternative or external load configurations, reduce the value from the cruise chart by 6 knots for each 10 square feet increase in drag area, Δ F. For example, if both cabin doors are open, the Δ F increases 6 ft^2 and the maximum range airspeed would be reduced by approximately 4 knots (6 Kts/10 ft^2 x 6 ft^2 = 3.6 Kts).

g. Additional Uses. The low speed end of the cruise chart (below 40 knots) is shown primarily to familiarize you with the low speed power requirements of the helicopter. It shows the power margin available for climb or acceleration during maneuvers, such as NOE flight. At zero airspeed, the torque represents the torque required to hover out of ground effect. In general, mission planning for low speed flight should be based on hover out of ground effect.

7-30. Single Engine.

The minimum or maximum single engine speeds can be determined from the torque available one engine inoperative (OEI) 2.5-minute line as shown on each cruise chart. The actual indicated torque on the operating engine will be 2 times the value shown on the dual engine torque per engine scale. An ATF value of 0.9 is utilized for conservatism. Single engine capability for other power rating may be determined by using a combination of the torque available and cruise charts. To calculate single engine speeds, first determine the torque available from Section II at the ENG TEMP limit desired and divide by 2. (Example: 90% TQ ÷ 2 = 45% TQ.) Select the appropriate cruise chart for the desired flight condition and enter the torque scale with the torque value derived above. Move up to the intersection of torque available and the mission gross weight arc, and read across for minimum single engine airspeed. Move up to the second intersection of torque and weight, and read across to determine the maximum single engine speed. If no intersections occur, there is no single engine level flight capability for the conditions. Single engine fuel flow at the desired 10-minute, 30-minute, and continuous conditions may be obtained by doubling the torque required from the cruise chart and referring to Figure 7-36.

CRUISE EXAMPLE

CLEAN CONFIGURATION
100% NR

30°C

EXAMPLE

WANTED

A. CRUISE CONDITIONS FOR MAXIMUM RANGE
B. CONDITIONS FOR MAXIMUM ENDURANCE
C. MAXIMUM AIRSPEED IN LEVEL FLIGHT
D. DETERMINE TORQUE AND FUEL FLOW REQUIRED TO CRUISE WITH CARGO DOORS OPEN
E. MAXIMUM CROSS WEIGHT – OEI

KNOWN

FAT = +30°C
PRESSURE ALTITUDE = 6000 FT
GW = 21000 LBS
ATF = 0.95

METHOD

A. TURN TO CRUISE CHARTS NEAREST KNOWN FLIGHT CONDITIONS, AT INTERSECTION OF MAX RANGE LINE AND KNOWN VALUE OF GROSS WEIGHT:
MOVE LEFT, READ TAS = 119 KTS
MOVE RIGHT, READ IAS = 104 KTS
MOVE DOWN, READ TORQUE = 75% TQ
MOVE UP, READ TOTAL FUEL FLOW = 1090 LBS / HR

B. AT INTERSECTION OF MAX END AND R / C LINE AND KNOWN VALUE OF GROSS WEIGHT:
MOVE LEFT, READ TAS = 83 KTS
MOVE RIGHT, READ IAS = 68 KTS
MOVE DOWN, READ TORQUE = 56% TQ
MOVE UP, READ TOTAL FUEL FLOW = 890 LBS / HR

C. AT THE INTERSECTION OF GROSS WEIGHT AND TORQUE AVAILABLE ~ 10 MINUTES (ATF = .95)
MOVE LEFT, READ MAXIMUM TAS = 132 KTS
MOVE RIGHT, READ MAXIMUM IAS = 117 KTS
MOVE DOWN, READ MAXIMUM TORQUE = 97% TQ
MOVE UP, READ TOTAL FUEL FLOW = 1345 LBS / HR

D. ENTER △TQ% PER 10 SQ FT SCALE AT 119 KTAS
MOVE UP, READ △TQ = 5.3%
TURN TO DRAG TABLE IN SECTION VII
NOTE CARGO DOORS OPEN = 6.0 SQ FT△F
AND HAS A DRAG MULTIPLYING FACTOR VALUE OF 0.60, CALCULATE TOTAL TORQUE REQUIRED USING THE CONDITIONS OF EXAMPLE A:
75% + (0.6 X 5.3%) = 78.18 ≈ 78.2%
READ FUEL FLOW AT TOTAL TORQUE = 1125 LBS / HR

E. THE MAXIMUM GROSS WEIGHT TO MAINTAIN OEI LEVEL FLIGHT AT INTERSECTION OF MAX END AND OEI ~ 2.5 MINUTES TORQUE AVAILABLE LINE,
READ MAX GROSS WIEGHT = 18600 LB
MOVE DOWN READ OEI TORQUE = 47
(47% x 2) = 94%

DATA BASIS: FLIGHT TEST

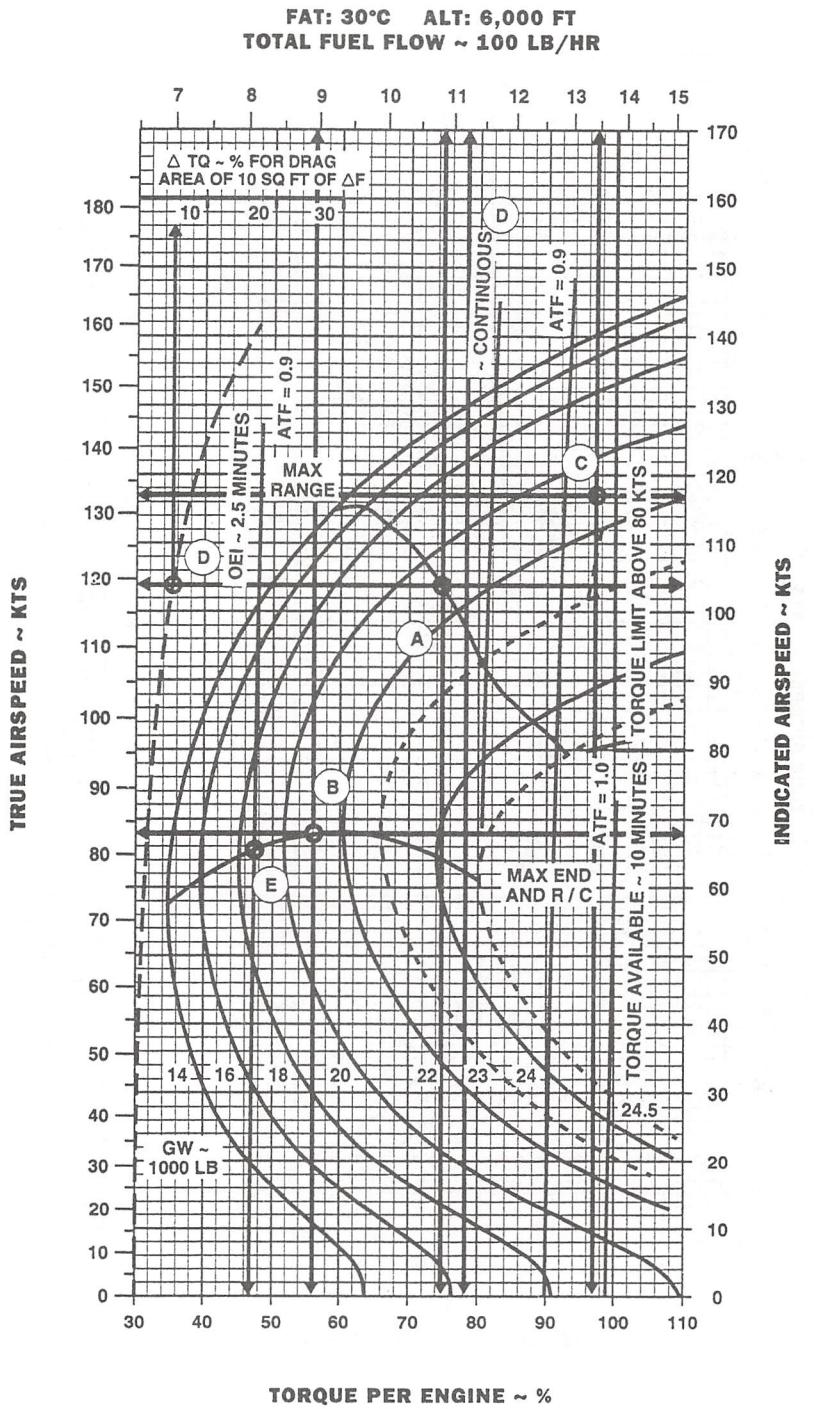

AK0365
SA

Figure 7-9. Sample Cruise Chart

CRUISE

CLEAN CONFIGURATION
PRESS ALT: 0 FT

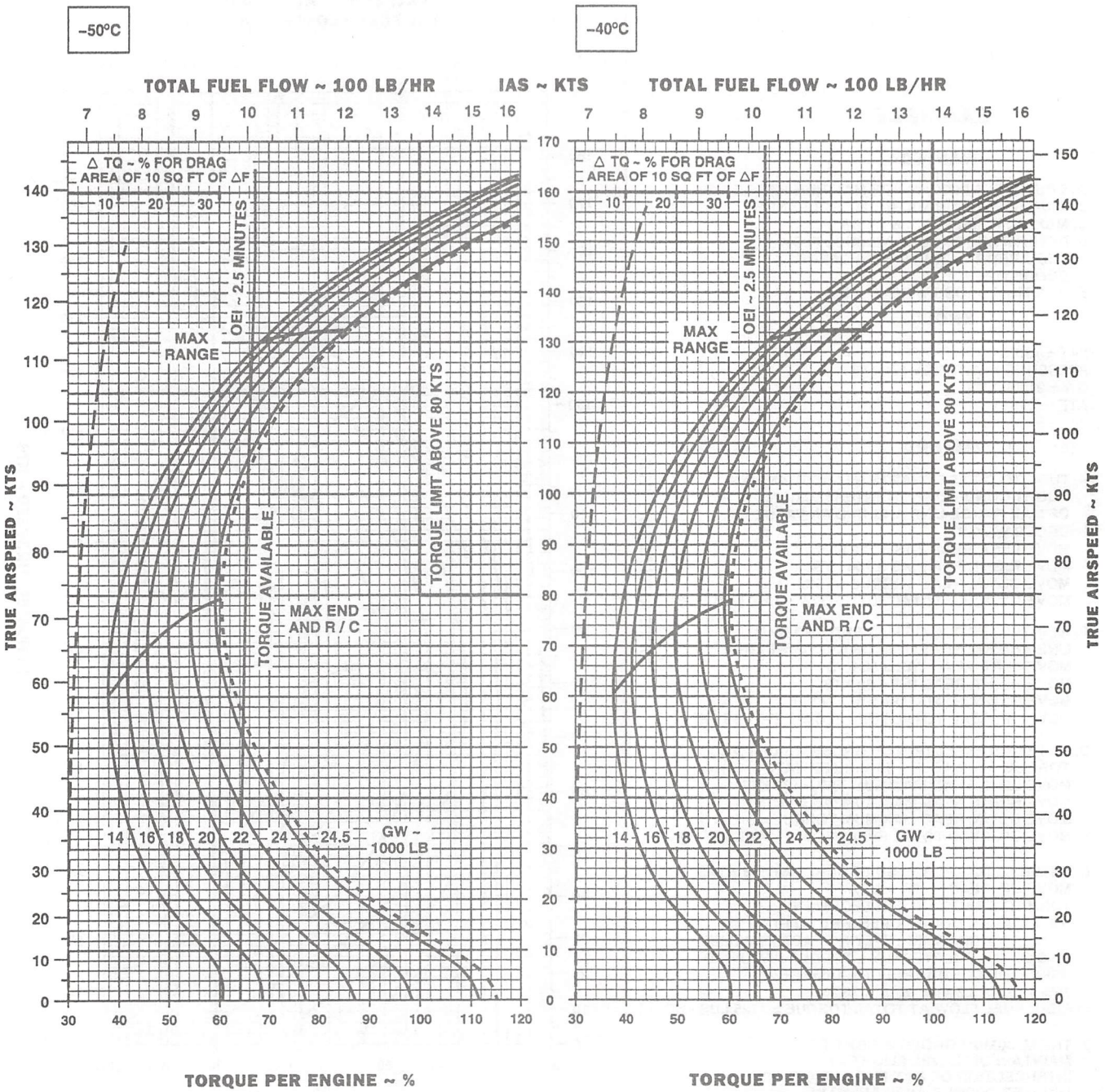

DATA BASIS: FLIGHT TEST

AK0288_1
SA

Figure 7-10. Cruise - Pressure Altitude Sea Level - Clean (Sheet 1 of 6)

CRUISE

CLEAN CONFIGURATION
PRESS ALT: 0 FT

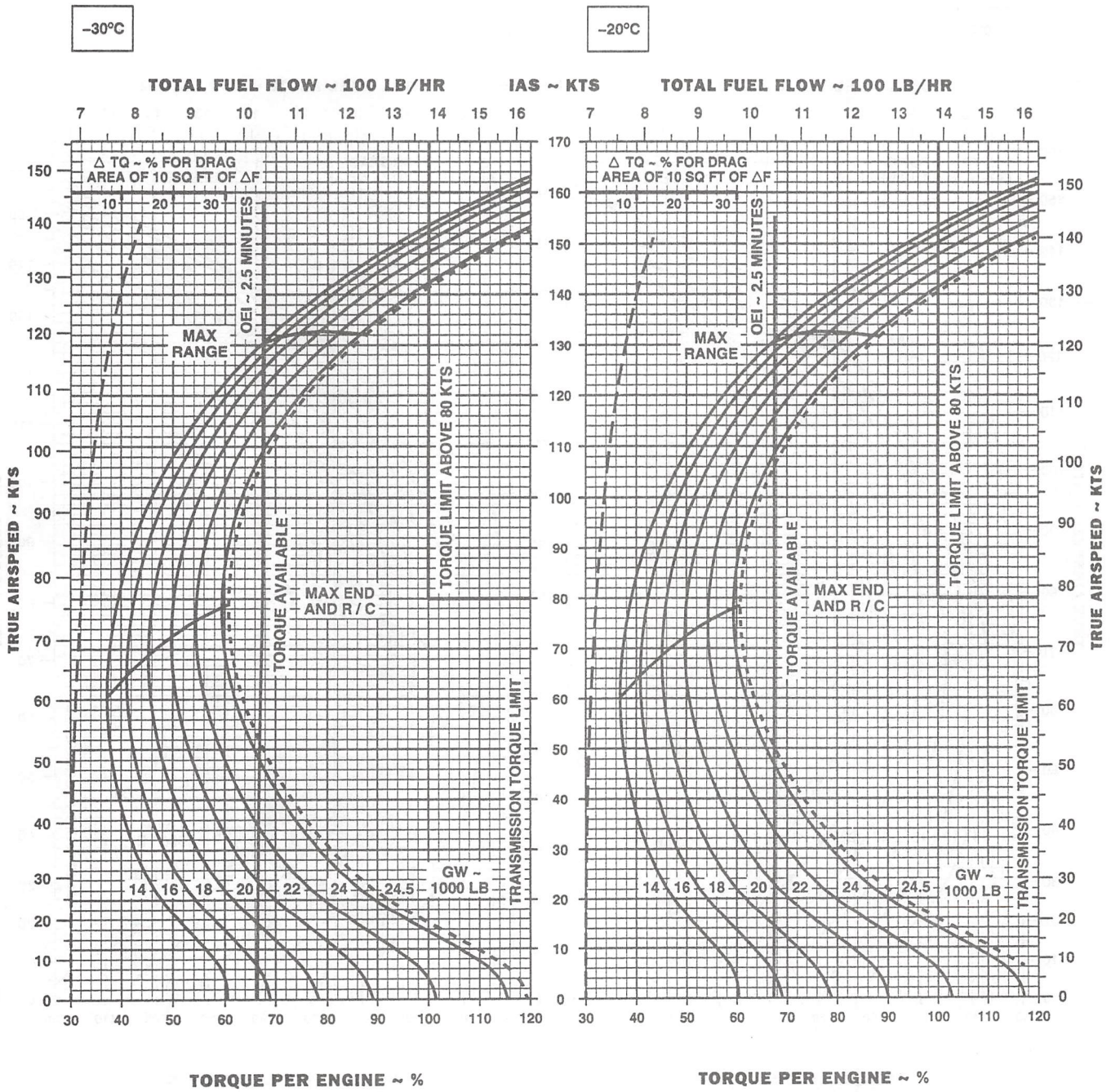

DATA BASIS: FLIGHT TEST

AK0288_2
SA

Figure 7-10. Cruise - Pressure Altitude Sea Level - Clean (Sheet 2 of 6)

CRUISE

CLEAN CONFIGURATION
PRESS ALT: 0 FT

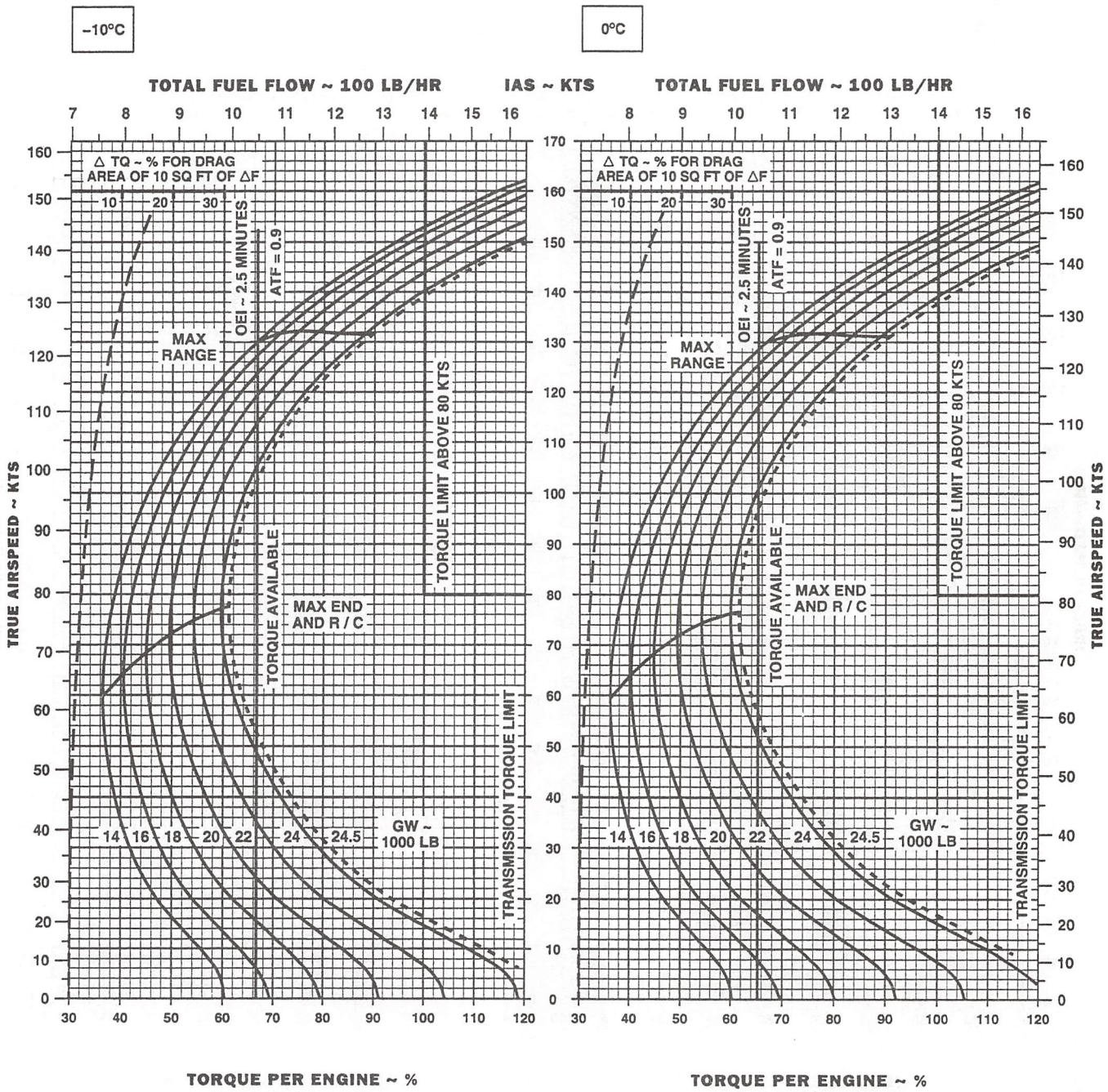

DATA BASIS: FLIGHT TEST

AK0288_3
SA

Figure 7-10. Cruise - Pressure Altitude Sea Level - Clean (Sheet 3 of 6)

CRUISE

CLEAN CONFIGURATION
PRESS ALT: 0 FT

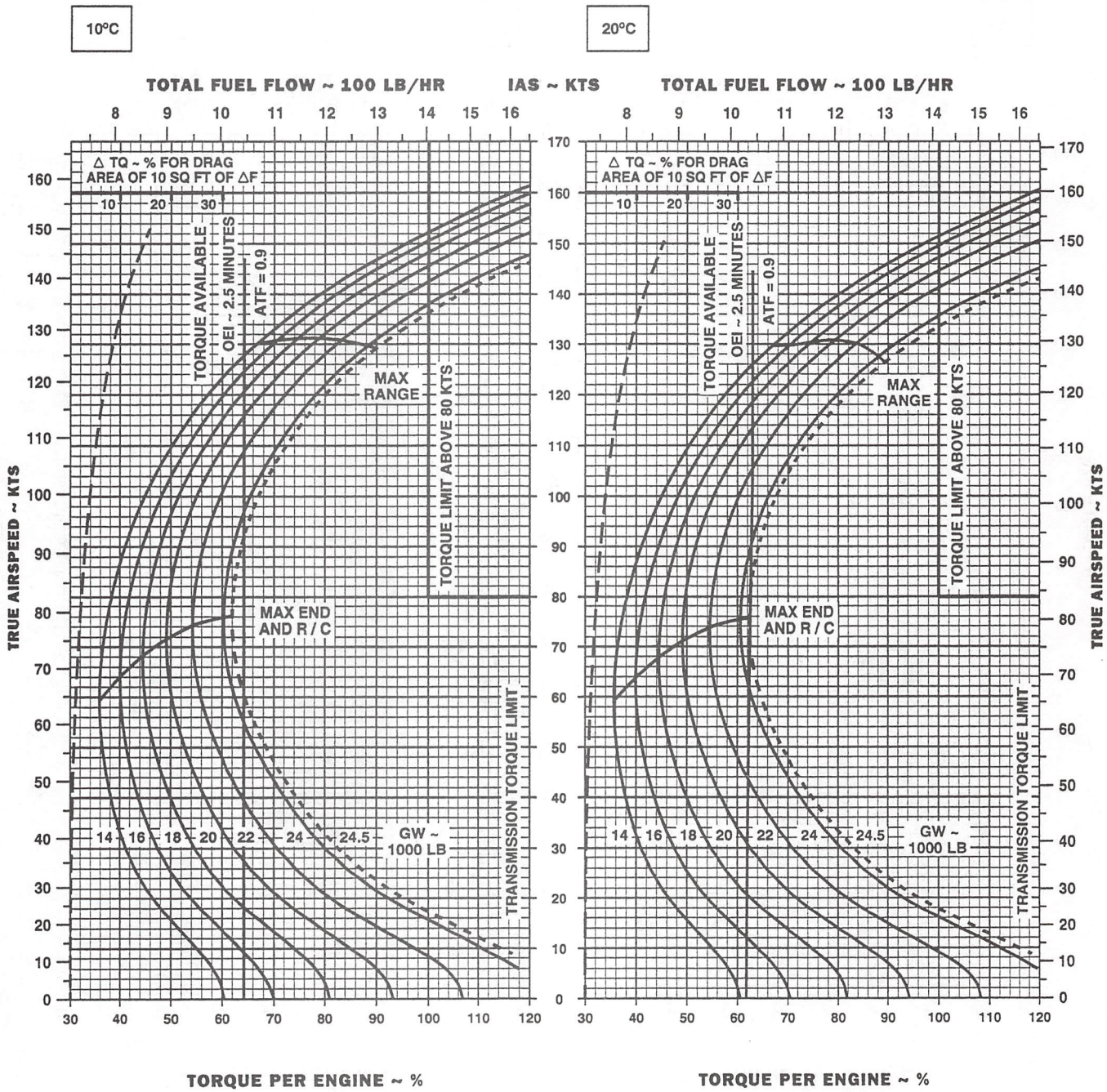

DATA BASIS: FLIGHT TEST

AK0288_4 SA

Figure 7-10. Cruise - Pressure Altitude Sea Level - Clean (Sheet 4 of 6)

CRUISE

CLEAN CONFIGURATION
PRESS ALT: 0 FT

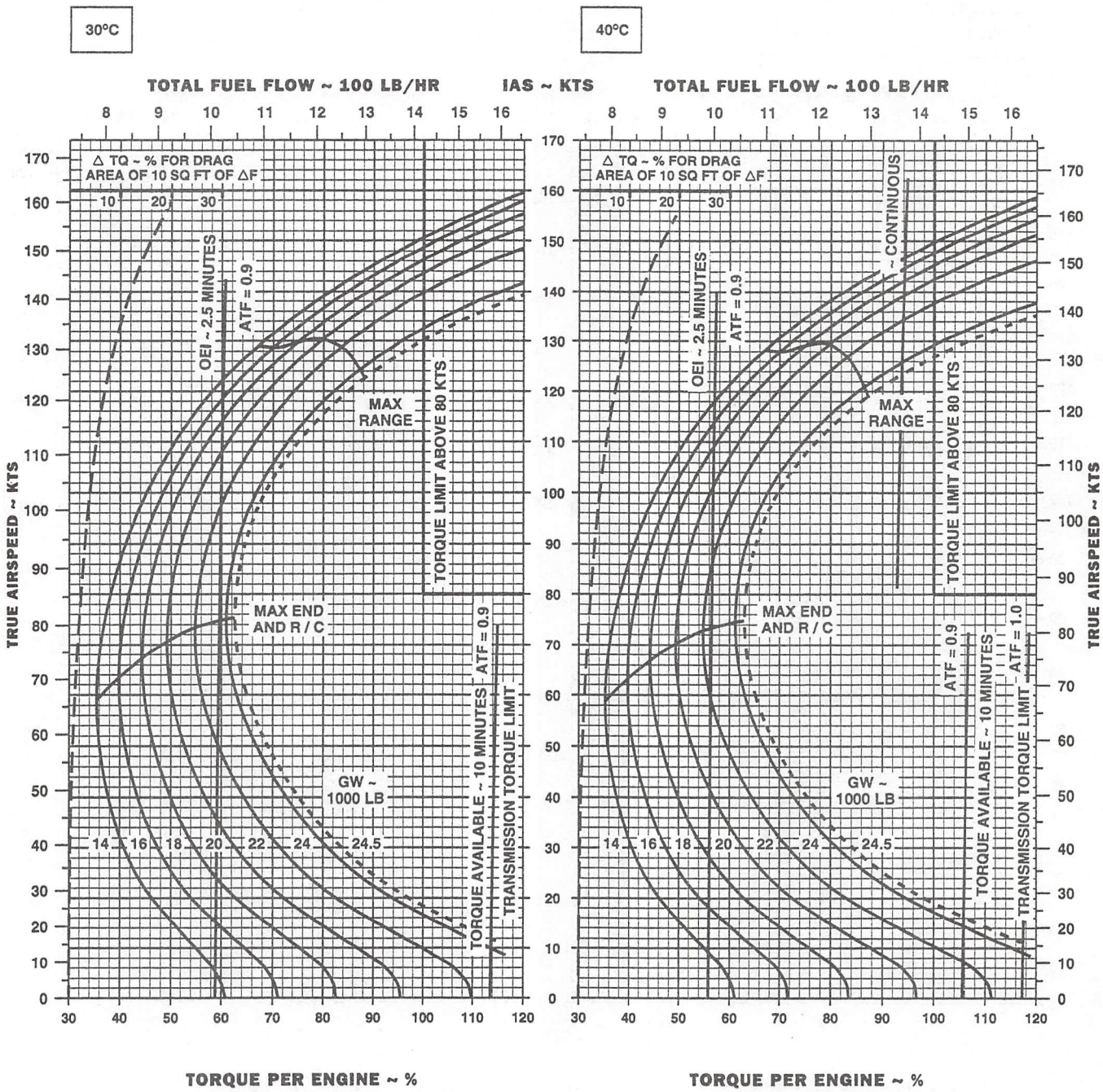

DATA BASIS: FLIGHT TEST

AK0288_5
SA

Figure 7-10. Cruise - Pressure Altitude Sea Level - Clean (Sheet 5 of 6)

CRUISE

CLEAN CONFIGURATION
PRESS ALT: 0 FT

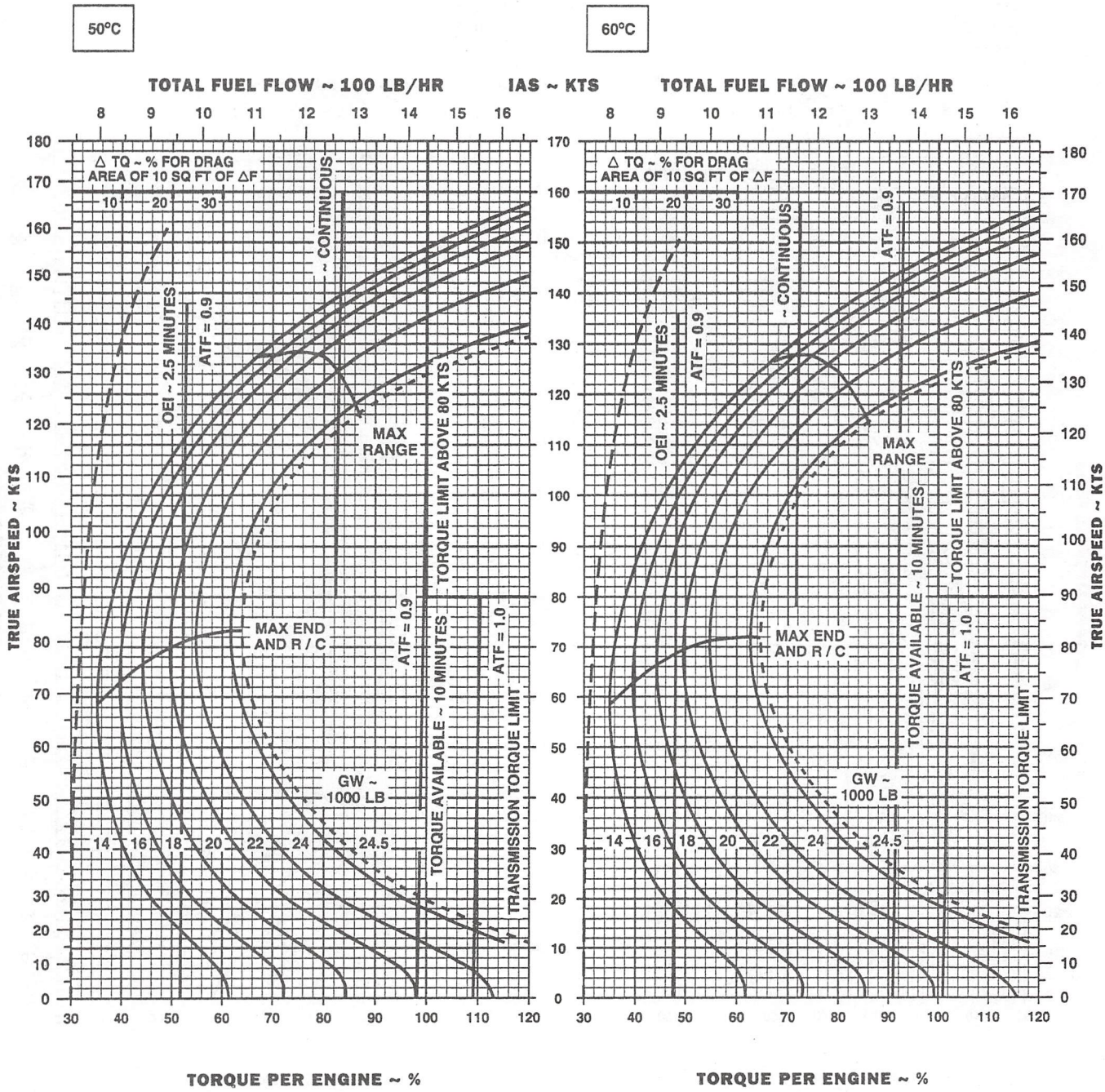

DATA BASIS: FLIGHT TEST

AK0288_6
SA

Figure 7-10. Cruise - Pressure Altitude Sea Level - Clean (Sheet 6 of 6)

CRUISE

ETS INSTALLED
PRESS ALT: 0 FT

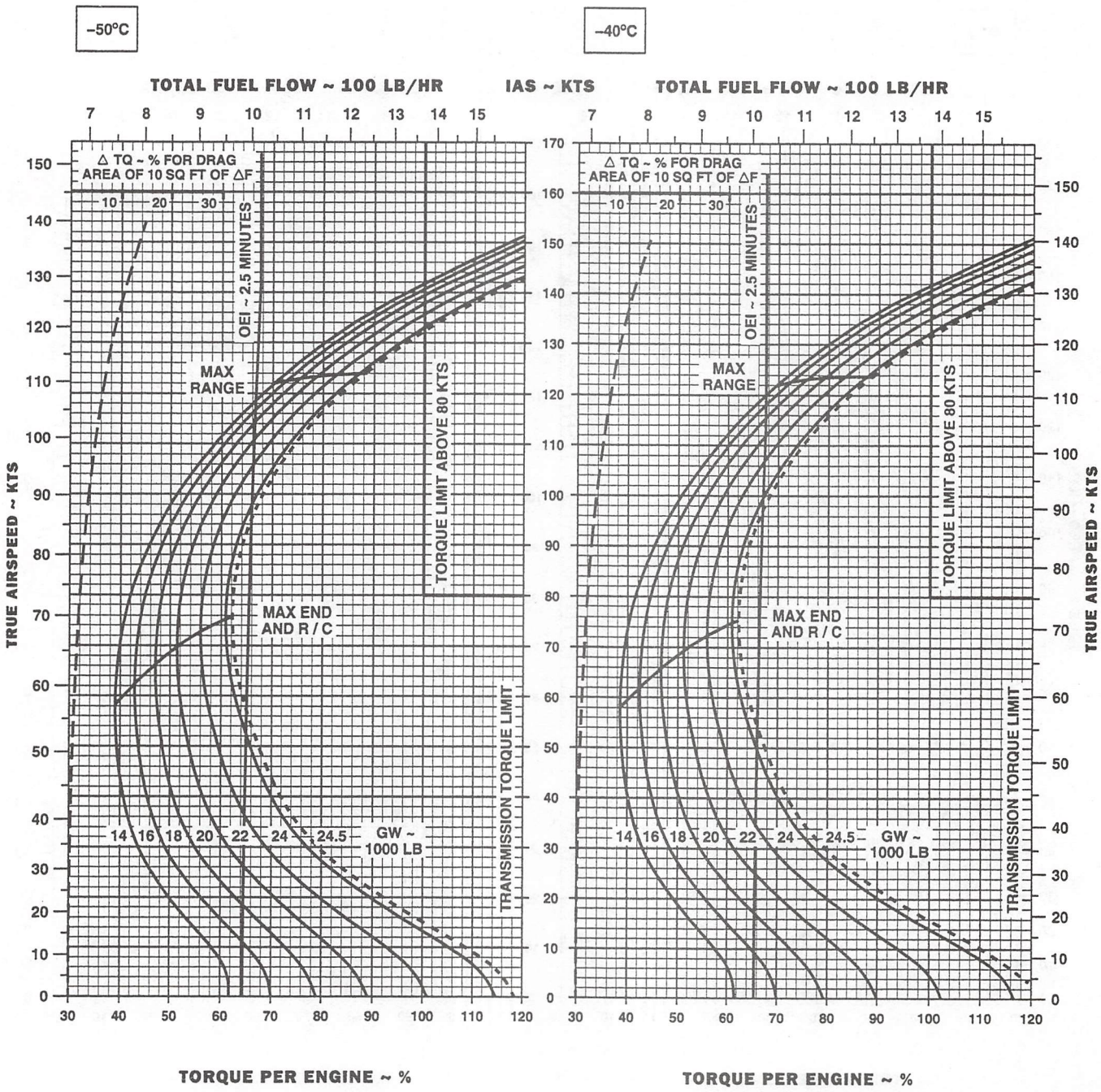

DATA BASIS: FLIGHT TEST

AK0926_1
SA

Figure 7-11. Cruise - Pressure Altitude Sea Level - ETS Installed (Sheet 1 of 6)

CRUISE

ETS INSTALLED
PRESS ALT: 0 FT

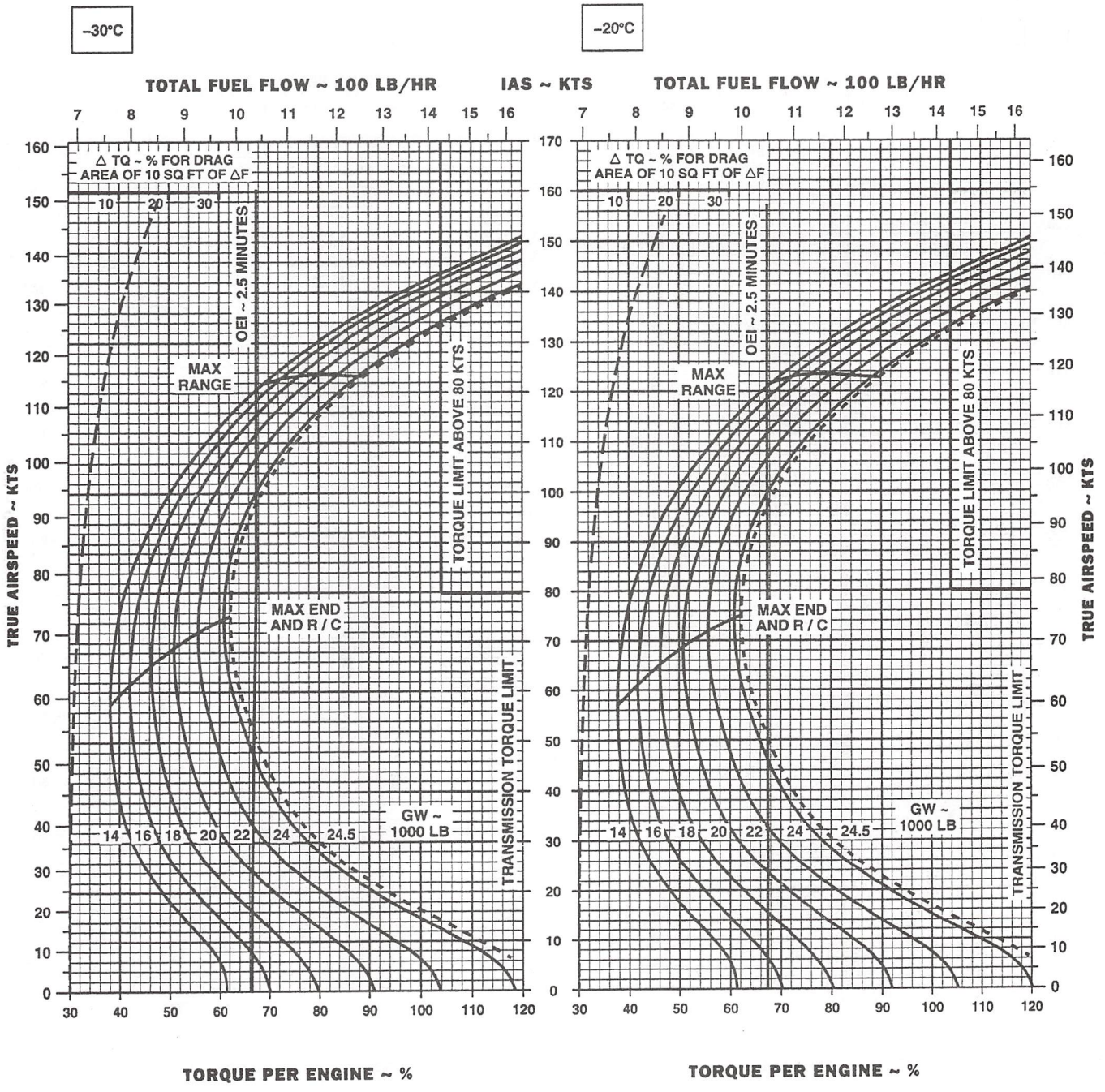

DATA BASIS: FLIGHT TEST

AK0926_2
SA

Figure 7-11. Cruise - Pressure Altitude Sea Level - ETS Installed (Sheet 2 of 6)

CRUISE
ETS INSTALLED
PRESS ALT: 0 FT

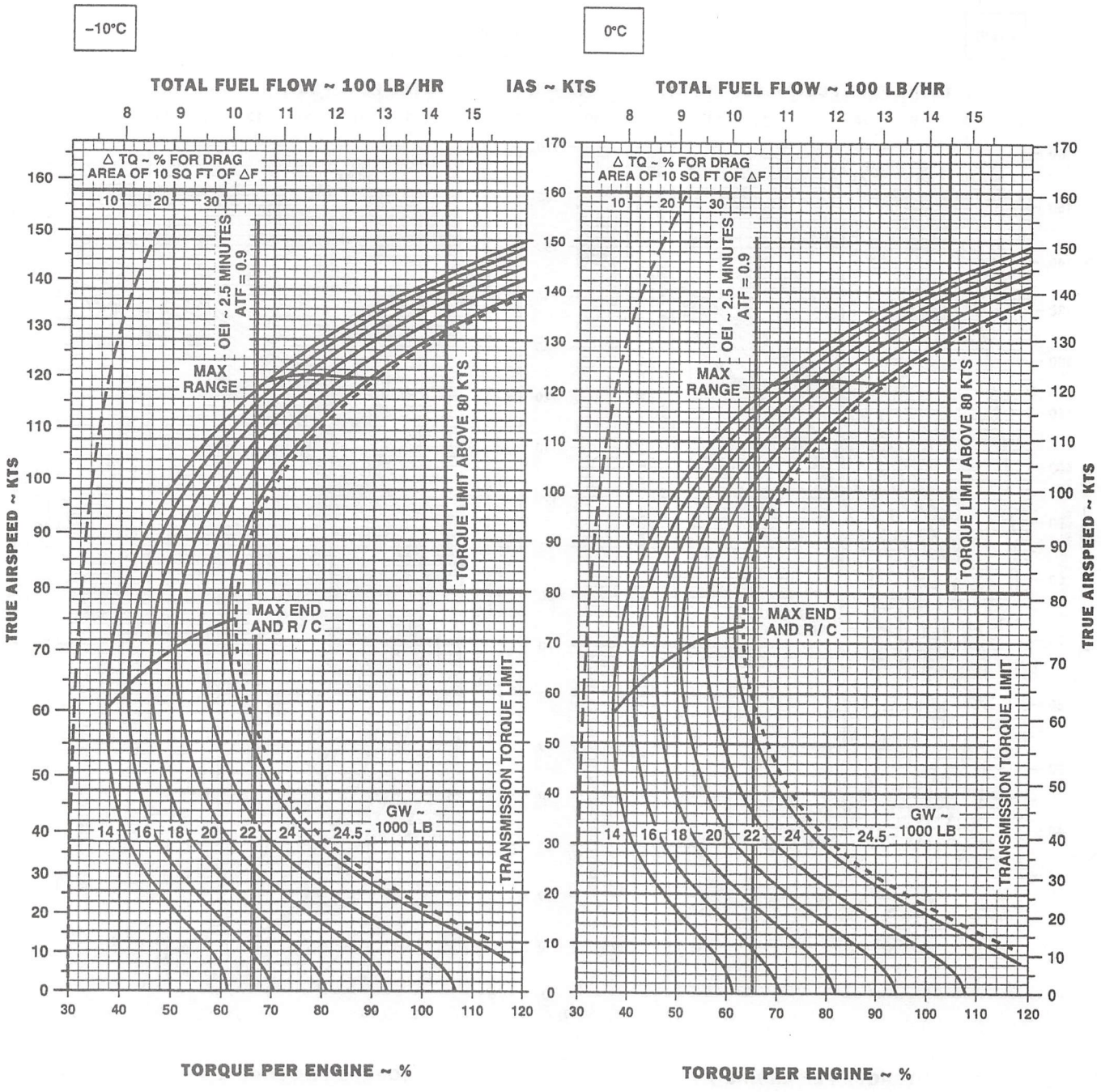

DATA BASIS: FLIGHT TEST

AK0926_3
SA

Figure 7-11. Cruise - Pressure Altitude Sea Level - ETS Installed (Sheet 3 of 6)

CRUISE

ETS INSTALLED
PRESS ALT: 0 FT

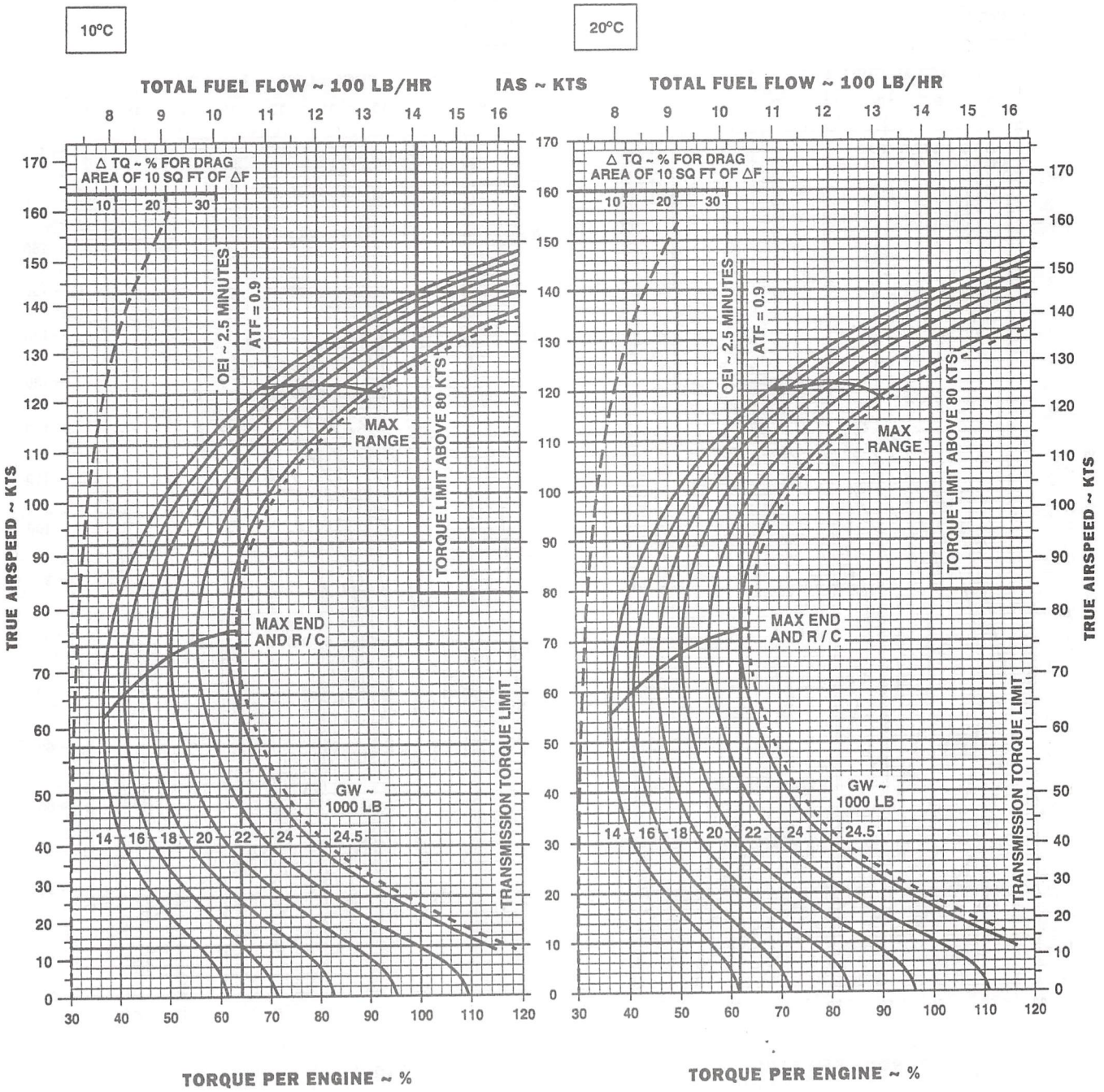

AK0926_4
SA

DATA BASIS: FLIGHT TEST

Figure 7-11. Cruise - Pressure Altitude Sea Level - ETS Installed (Sheet 4 of 6)

CRUISE
ETS INSTALLED
PRESS ALT: 0 FT

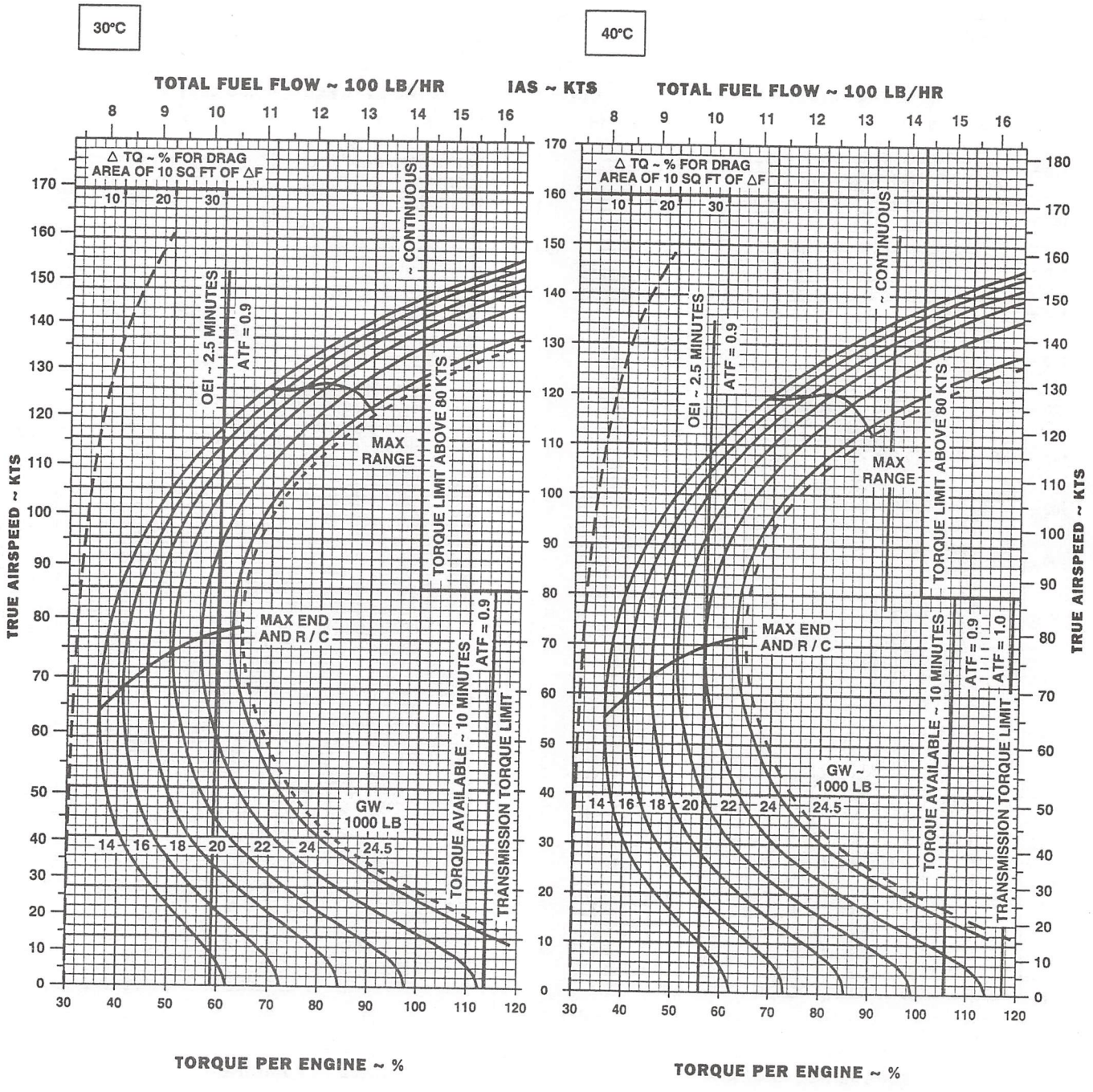

DATA BASIS: FLIGHT TEST

AK0926_5
SA

Figure 7-11. Cruise - Pressure Altitude Sea Level - ETS Installed (Sheet 5 of 6)

CRUISE

ETS INSTALLED
PRESS ALT: 0 FT

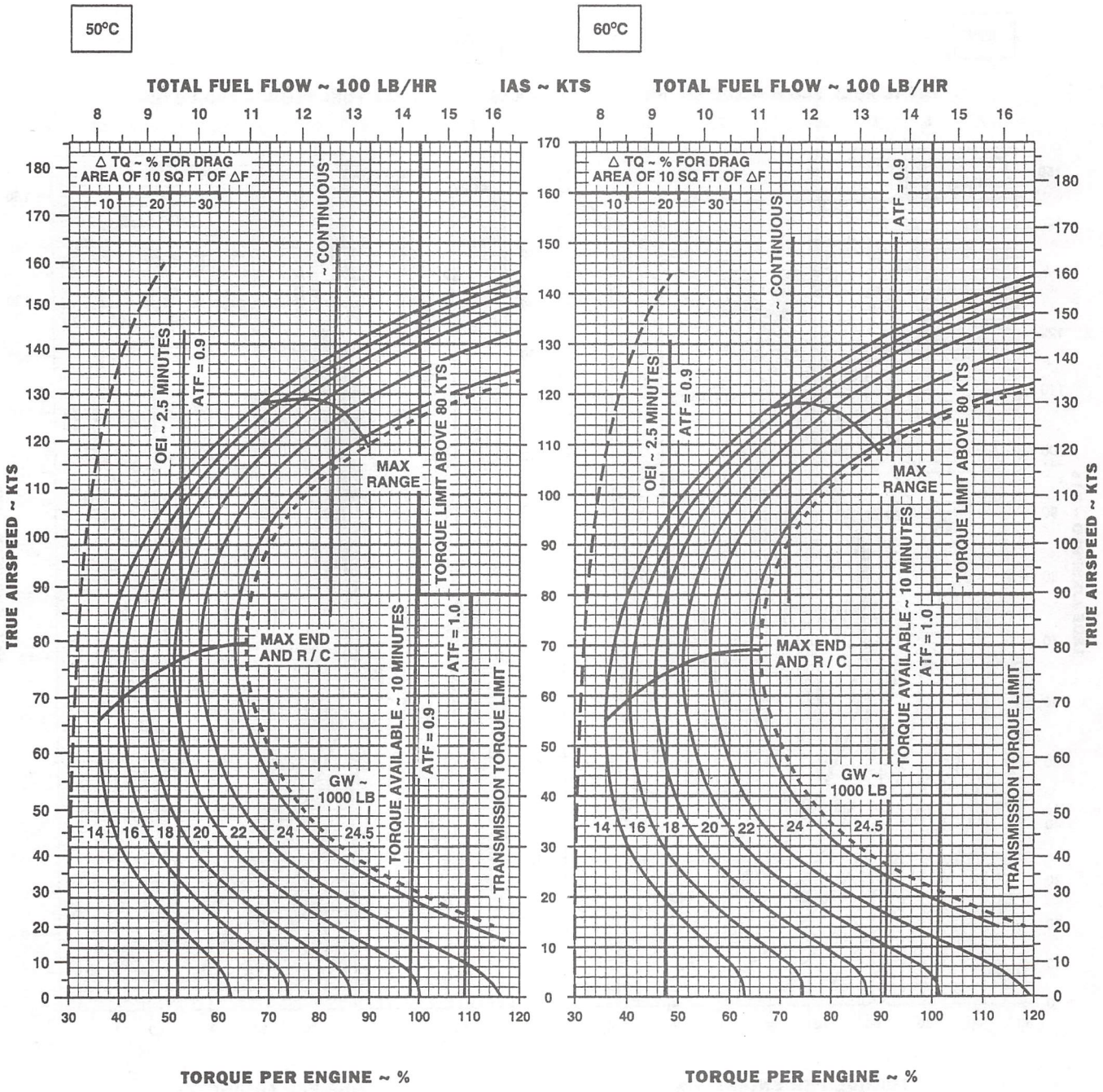

DATA BASIS: FLIGHT TEST

AK0926_6
SA

Figure 7-11. Cruise - Pressure Altitude Sea Level - ETS Installed (Sheet 6 of 6)

CRUISE

CLEAN CONFIGURATION
PRESS ALT: 2000 FT

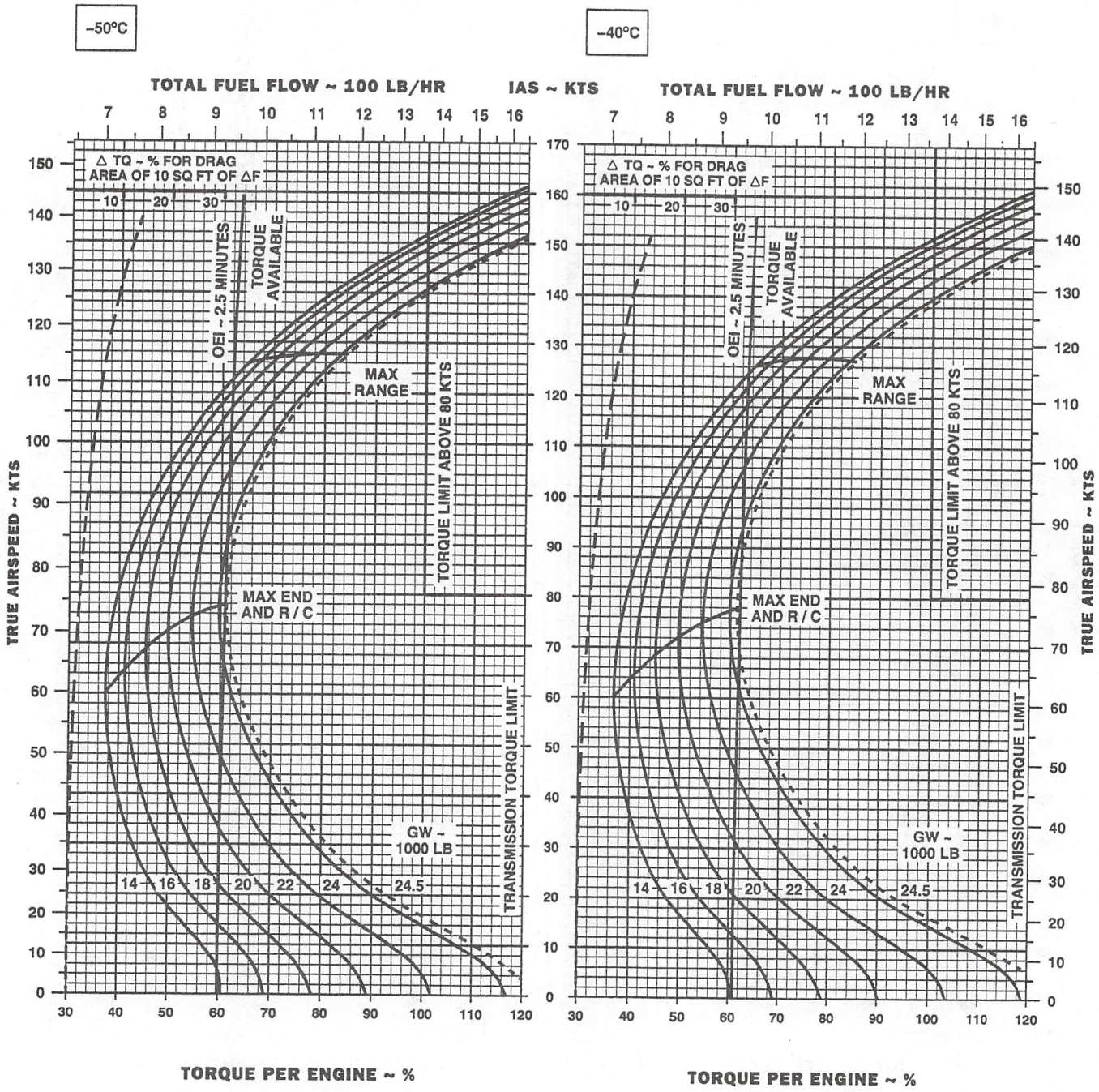

DATA BASIS: FLIGHT TEST

AK0289_1
SA

Figure 7-12. Cruise - Pressure Altitude 2,000 Feet - Clean (Sheet 1 of 6)

CRUISE

CLEAN CONFIGURATION
PRESS ALT: 2000 FT

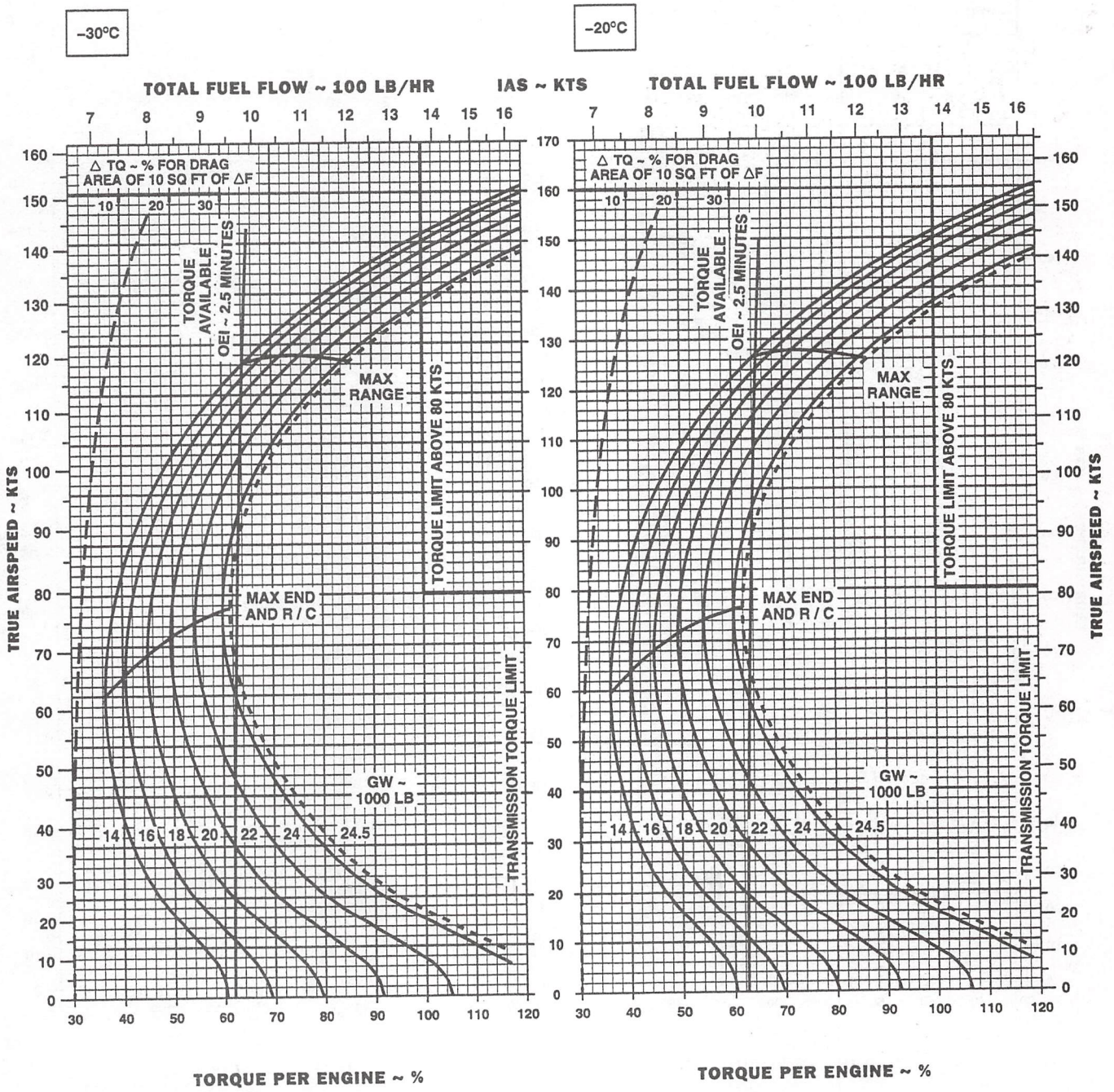

AK0289_2
SA

DATA BASIS: FLIGHT TEST

Figure 7-12. Cruise - Pressure Altitude 2,000 Feet - Clean (Sheet 2 of 6)

CRUISE

CLEAN CONFIGURATION
PRESS ALT: 2000 FT

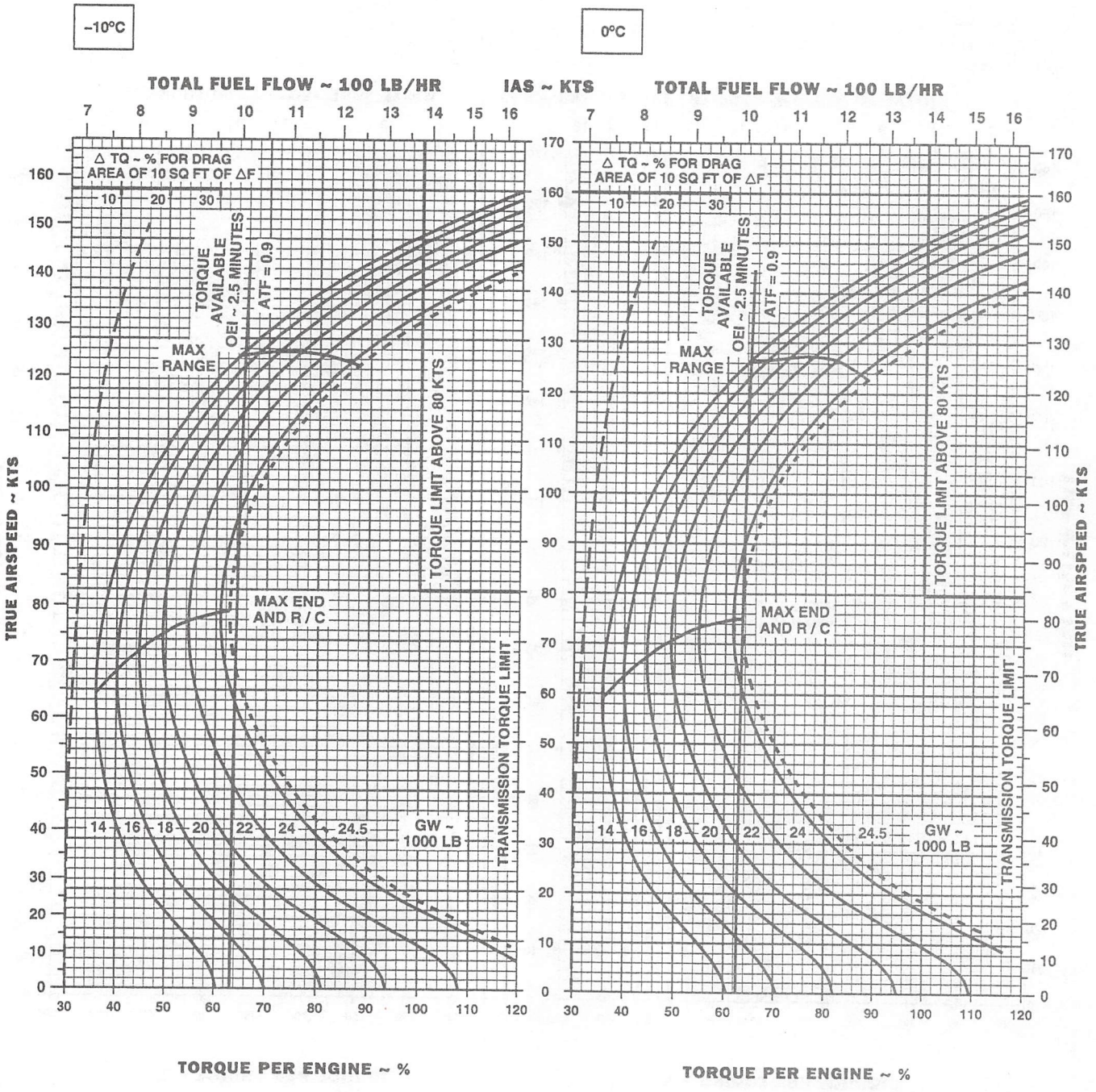

DATA BASIS: FLIGHT TEST

AK0289_3
SA

Figure 7-12. Cruise - Pressure Altitude 2,000 Feet - Clean (Sheet 3 of 6)

CRUISE

CLEAN CONFIGURATION
PRESS ALT: 2000 FT

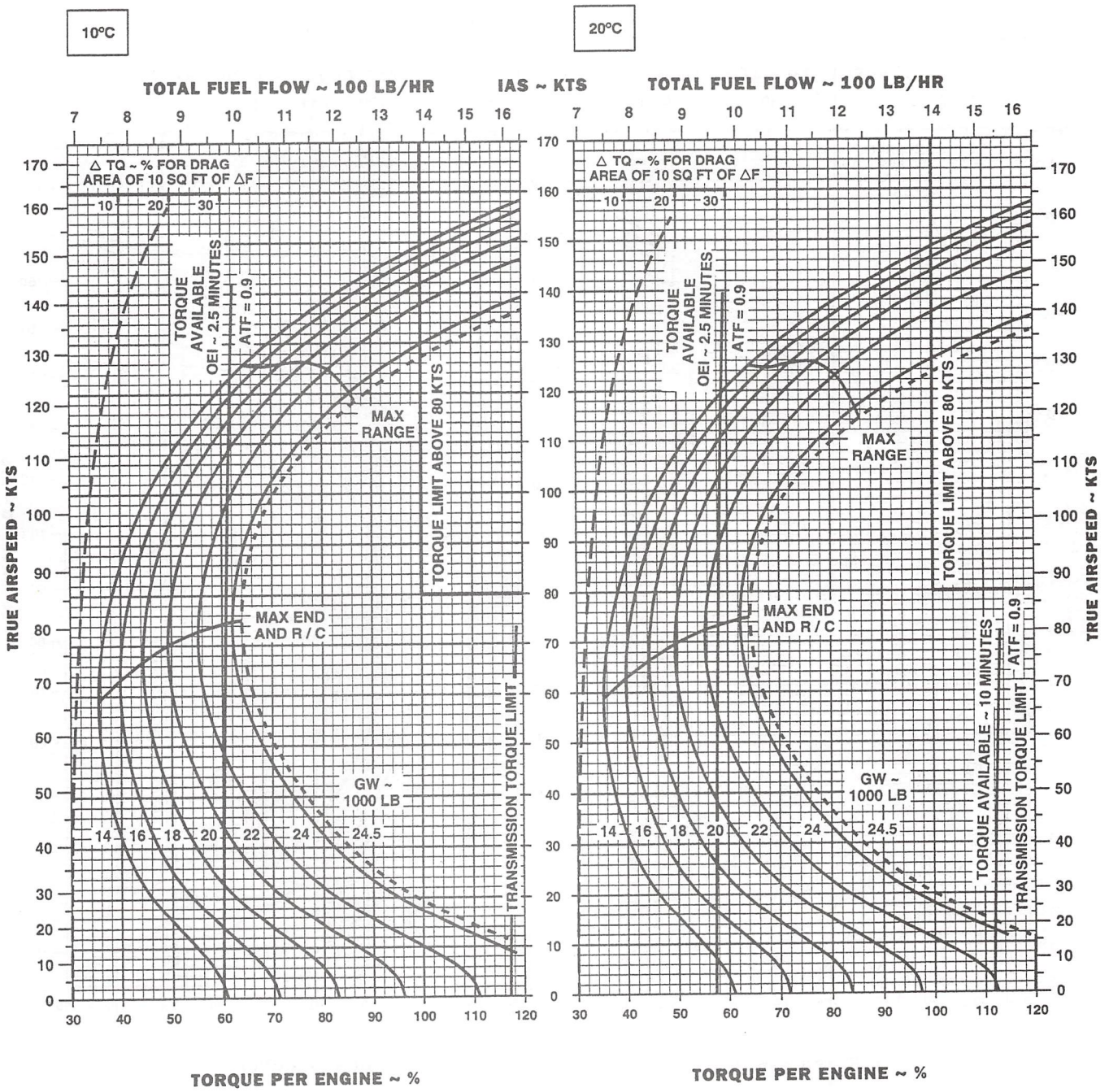

AK0289_4
SA

DATA BASIS: FLIGHT TEST

Figure 7-12. Cruise - Pressure Altitude 2,000 Feet - Clean (Sheet 4 of 6)

CRUISE

CLEAN CONFIGURATION
PRESS ALT: 2000 FT

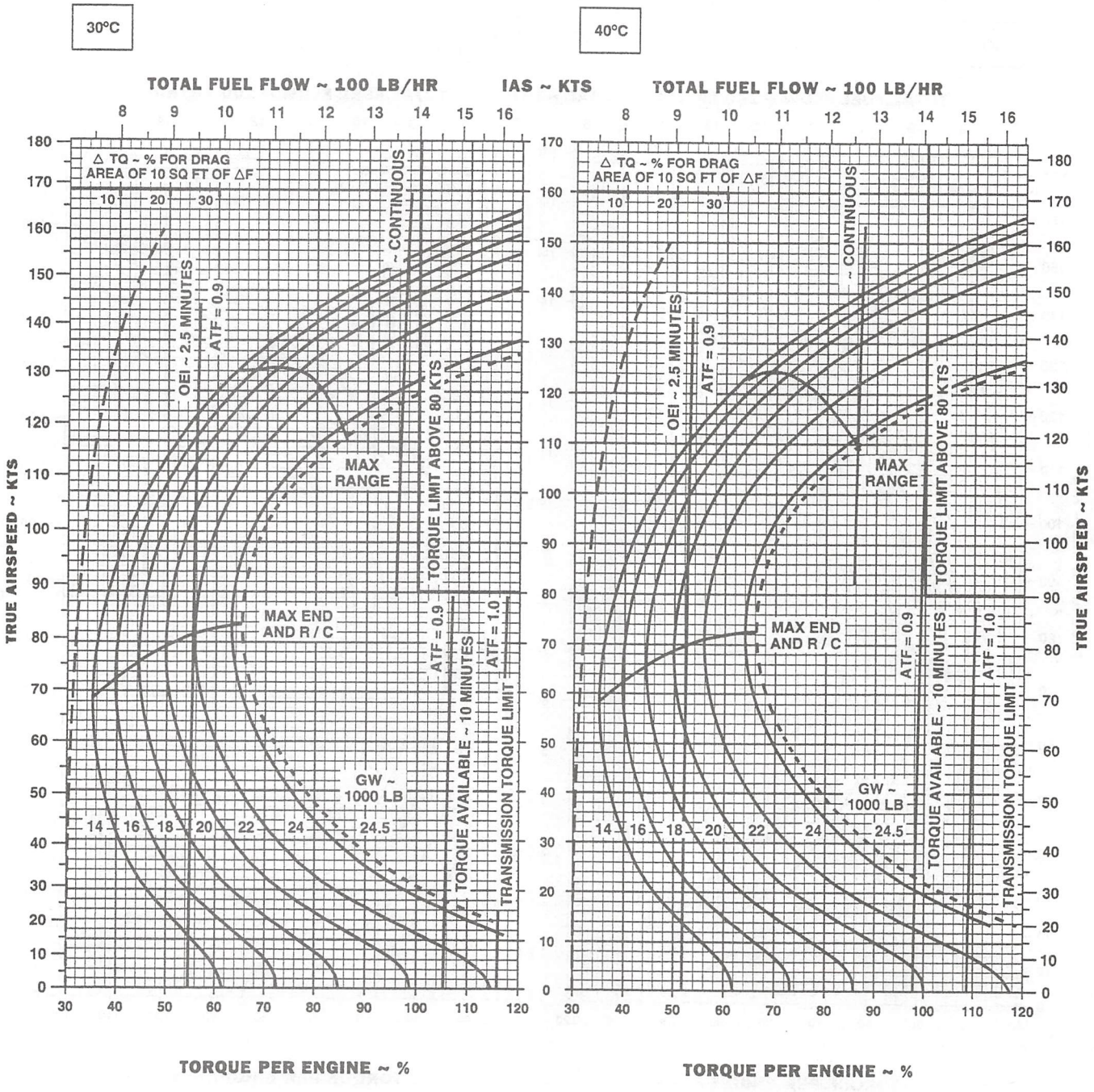

DATA BASIS: FLIGHT TEST

AK0289_5
SA

Figure 7-12. Cruise - Pressure Altitude 2,000 Feet - Clean (Sheet 5 of 6)

CRUISE

CLEAN CONFIGURATION
PRESS ALT: 2000 FT

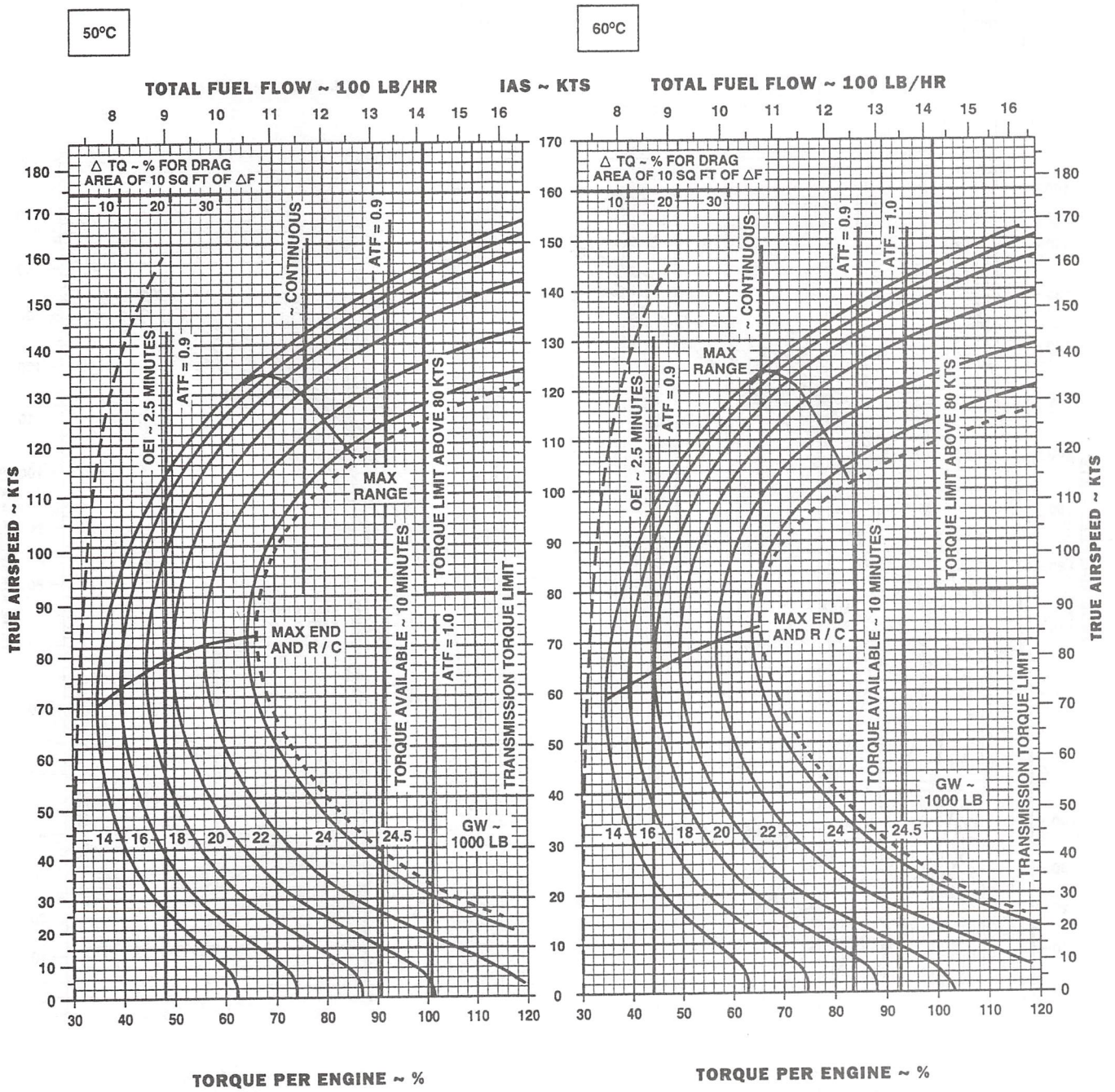

AK0289_6
SA

DATA BASIS: FLIGHT TEST

Figure 7-12. Cruise - Pressure Altitude 2,000 Feet - Clean (Sheet 6 of 6)

CRUISE

ETS INSTALLED
PRESS ALT: 2000 FT

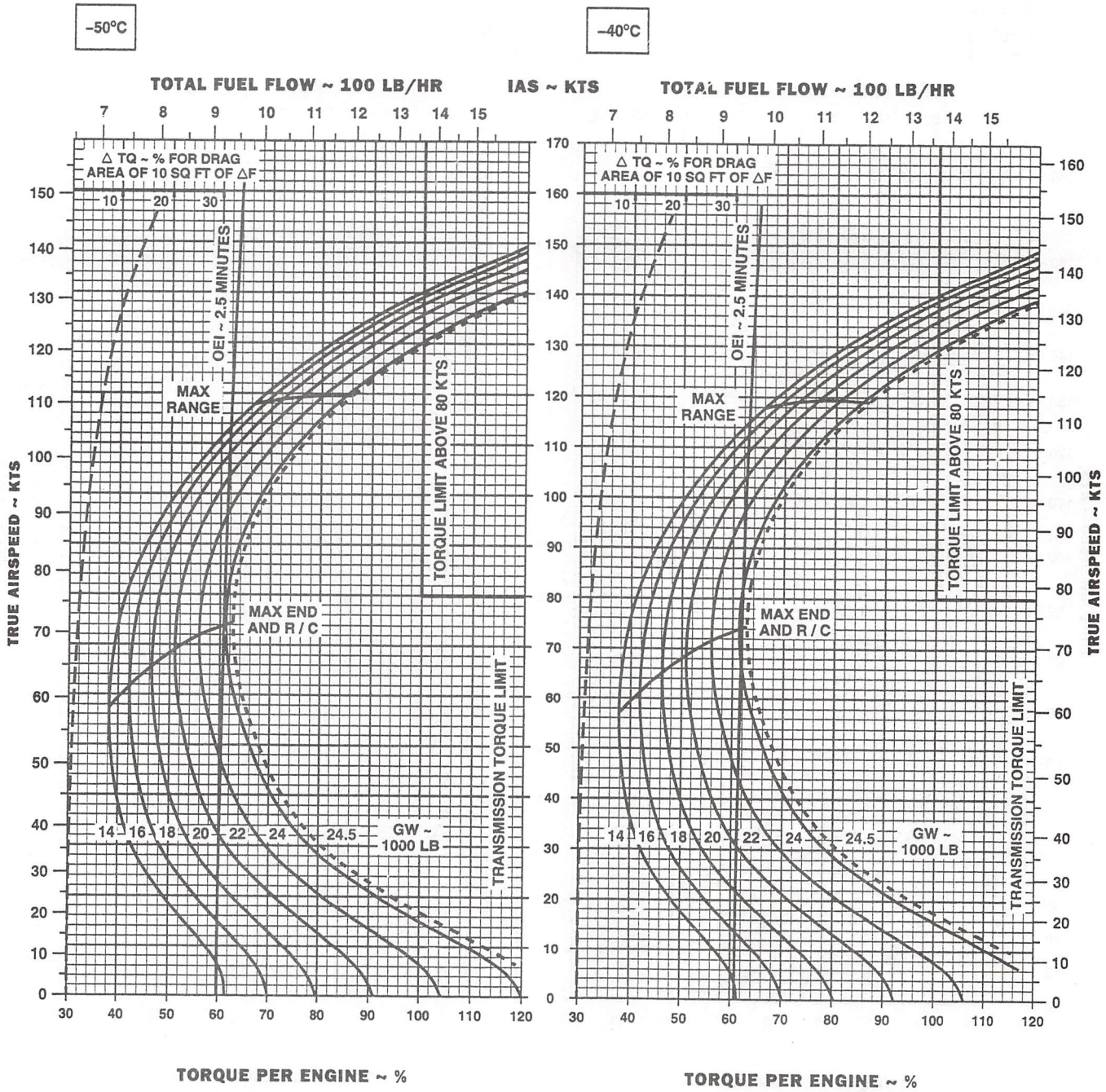

DATA BASIS: FLIGHT TEST

AK0927_1
SA

Figure 7-13. Cruise - Pressure Altitude 2,000 Feet - ETS Installed (Sheet 1 of 6)

CRUISE

ETS INSTALLED
PRESS ALT: 2000 FT

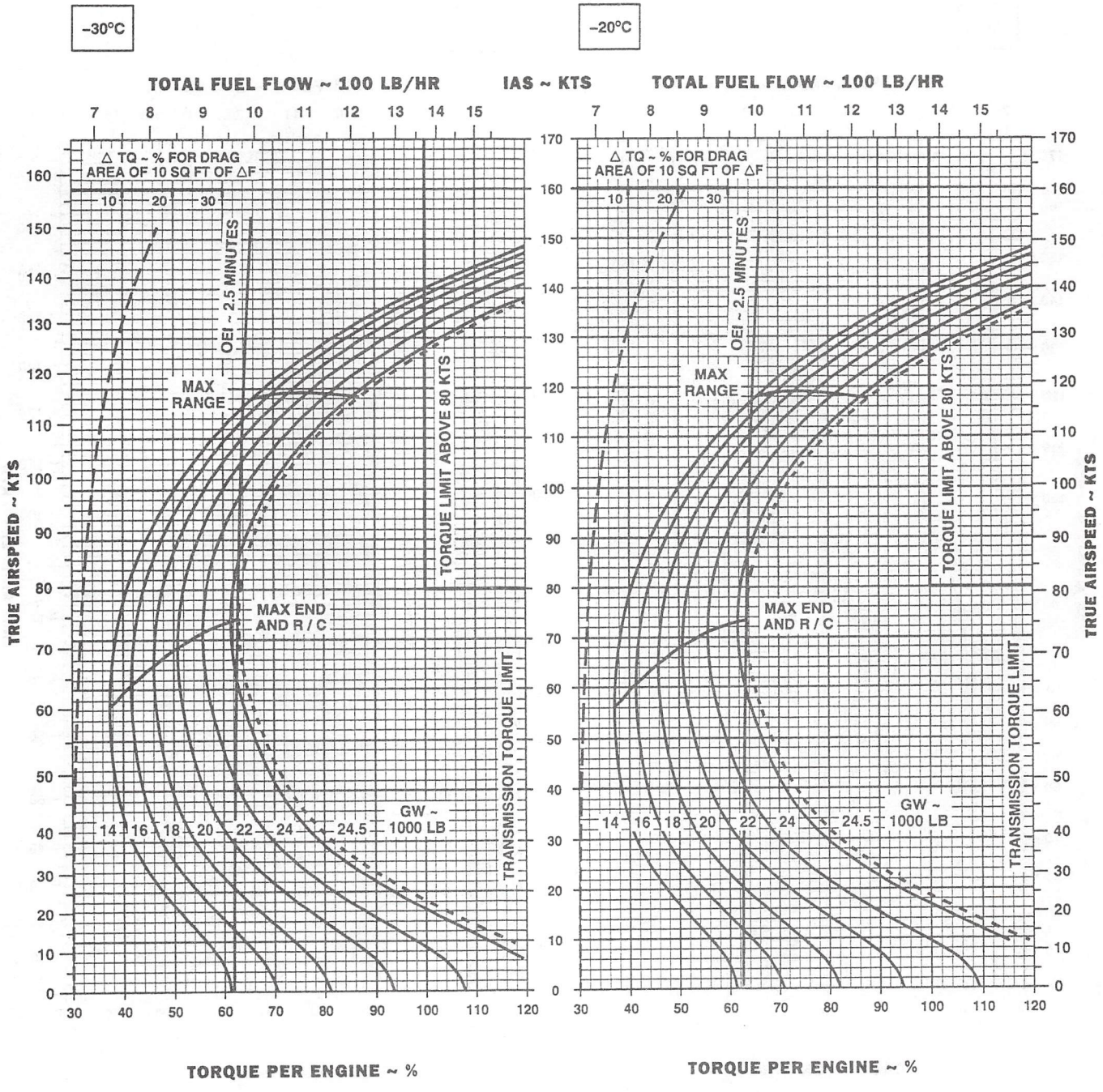

DATA BASIS: FLIGHT TEST

AK0927_2
SA

Figure 7-13. Cruise - Pressure Altitude 2,000 Feet - ETS Installed (Sheet 2 of 6)

CRUISE

ETS INSTALLED
PRESS ALT: 2000 FT

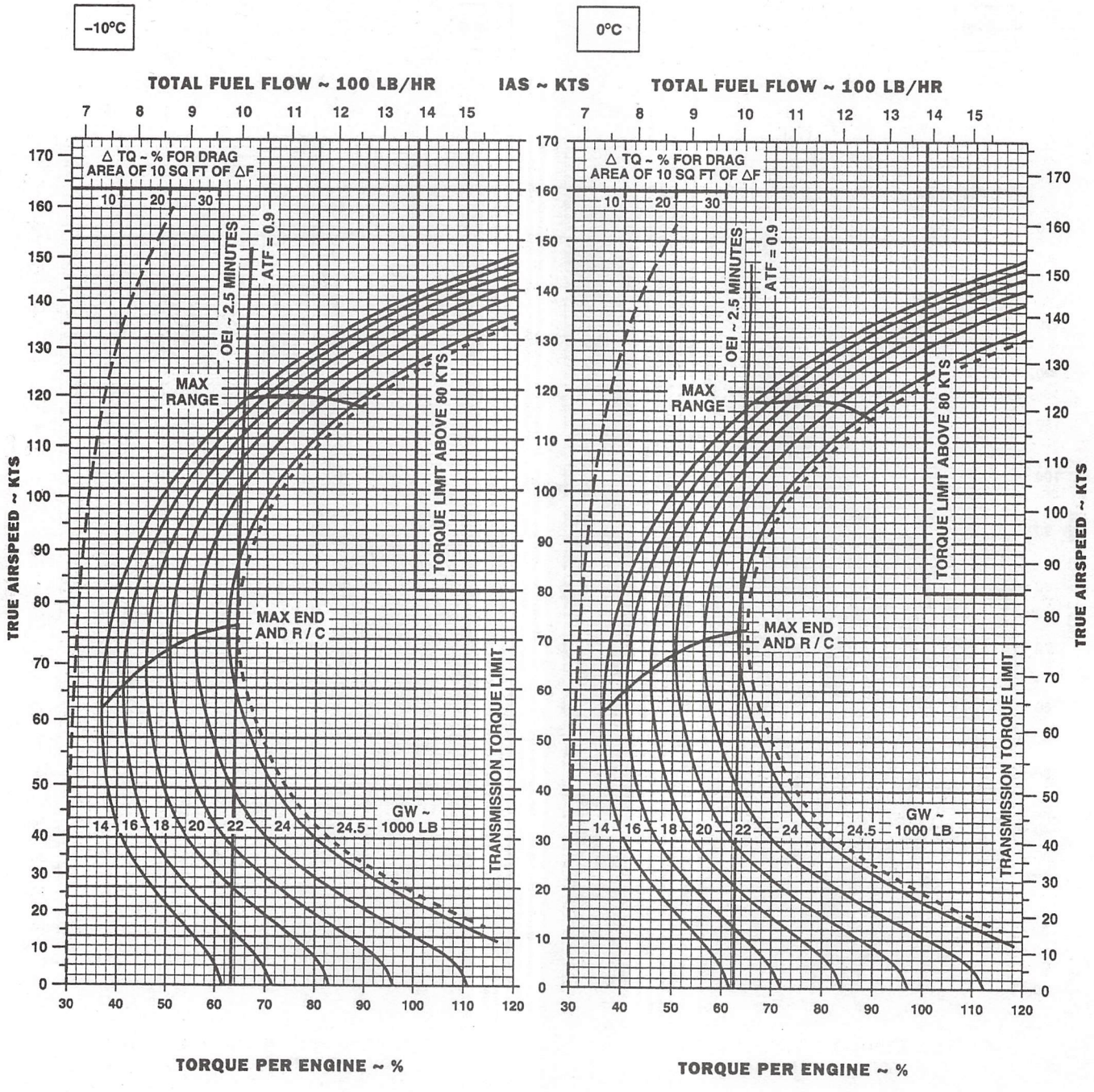

DATA BASIS: FLIGHT TEST

AK0927_3
SA

Figure 7-13. Cruise - Pressure Altitude 2,000 Feet - ETS Installed (Sheet 3 of 6)

CRUISE

ETS INSTALLED
PRESS ALT: 2000 FT

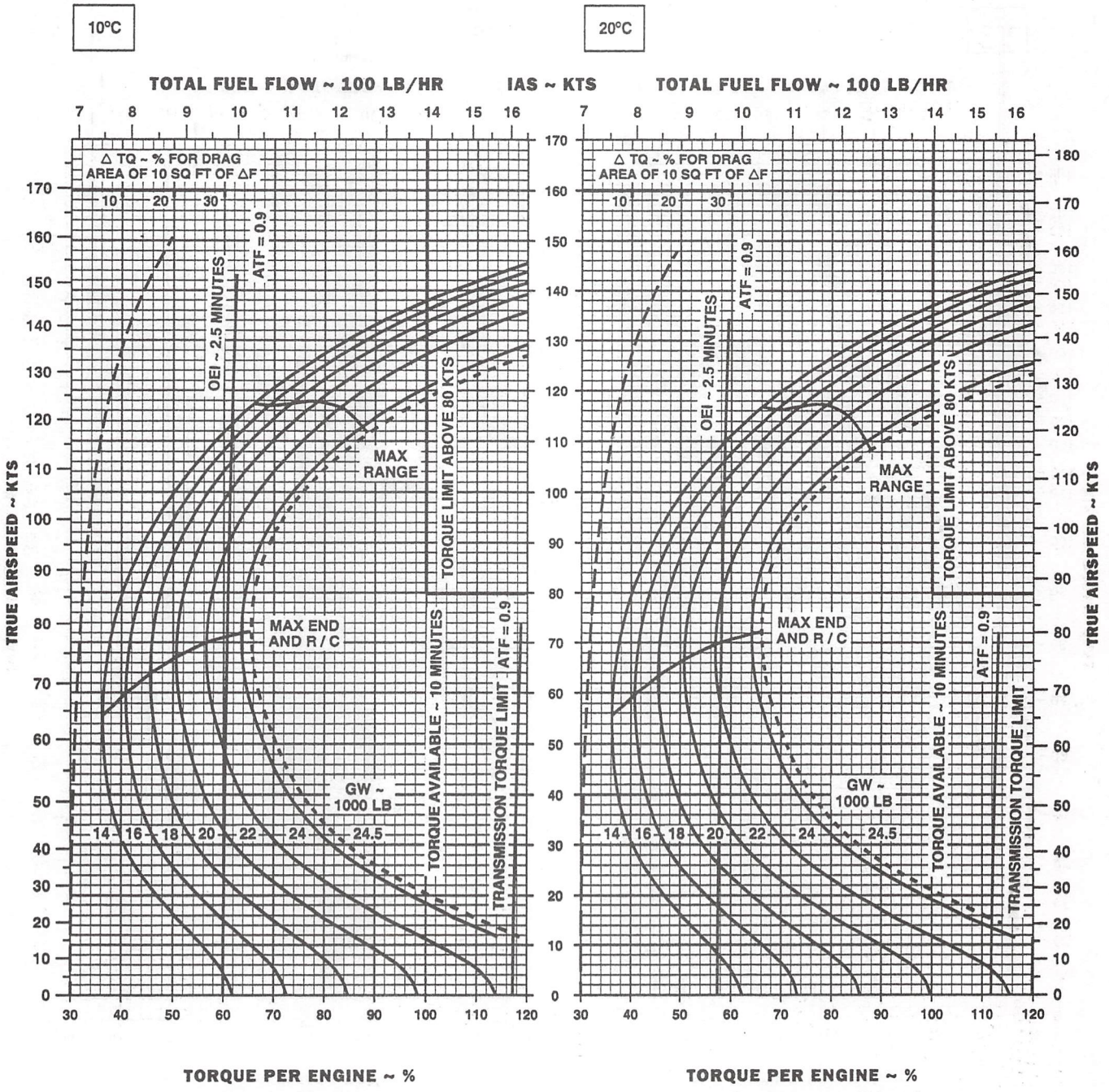

DATA BASIS: FLIGHT TEST

AK0927_4
SA

Figure 7-13. Cruise - Pressure Altitude 2,000 Feet - ETS Installed (Sheet 4 of 6)

CRUISE

ETS INSTALLED

PRESS ALT: 2000 FT

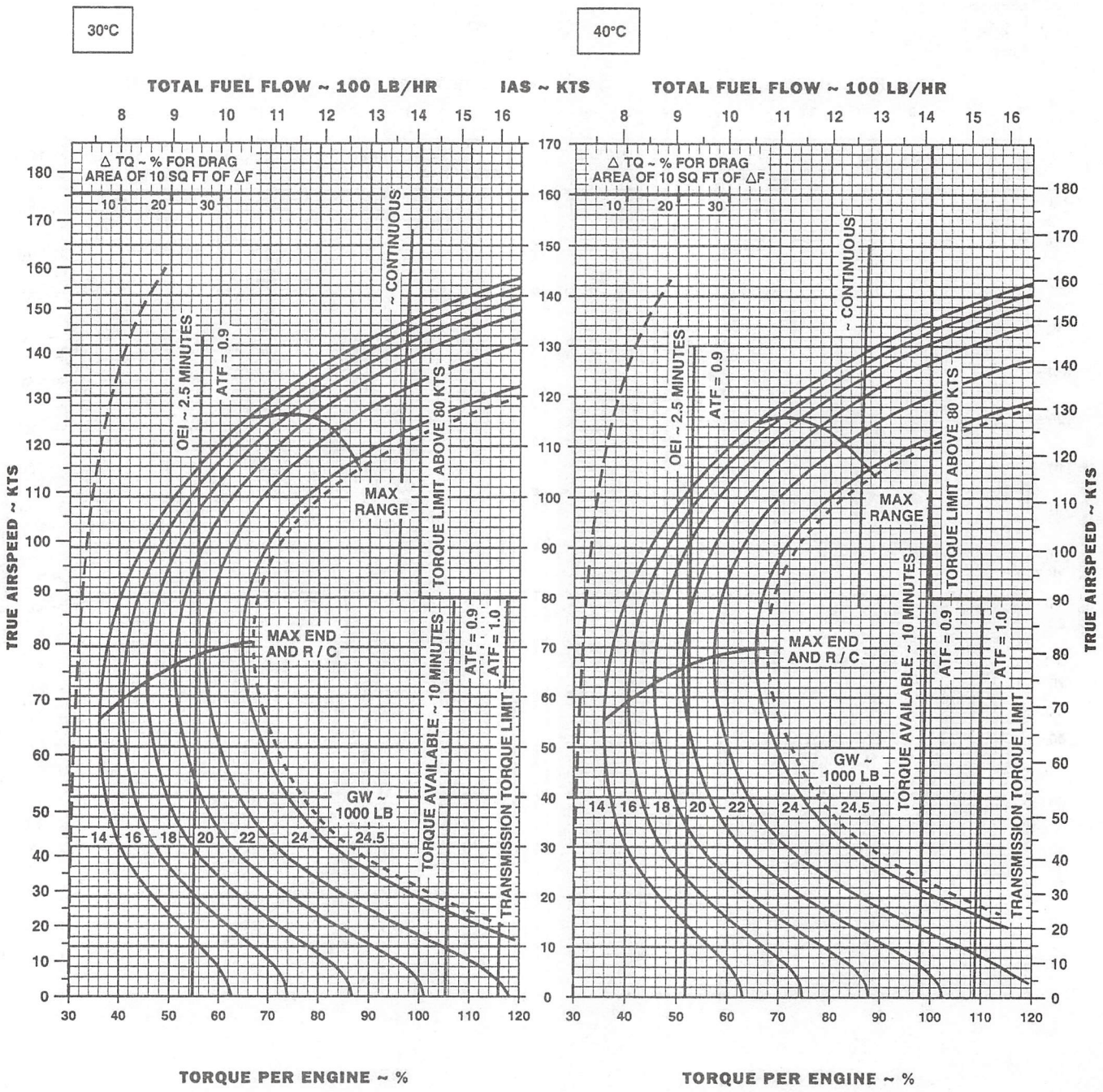

DATA BASIS: FLIGHT TEST

AK0927_5
SA

Figure 7-13. Cruise - Pressure Altitude 2,000 Feet - ETS Installed (Sheet 5 of 6)

CRUISE
ETS INSTALLED
PRESS ALT: 2000 FT

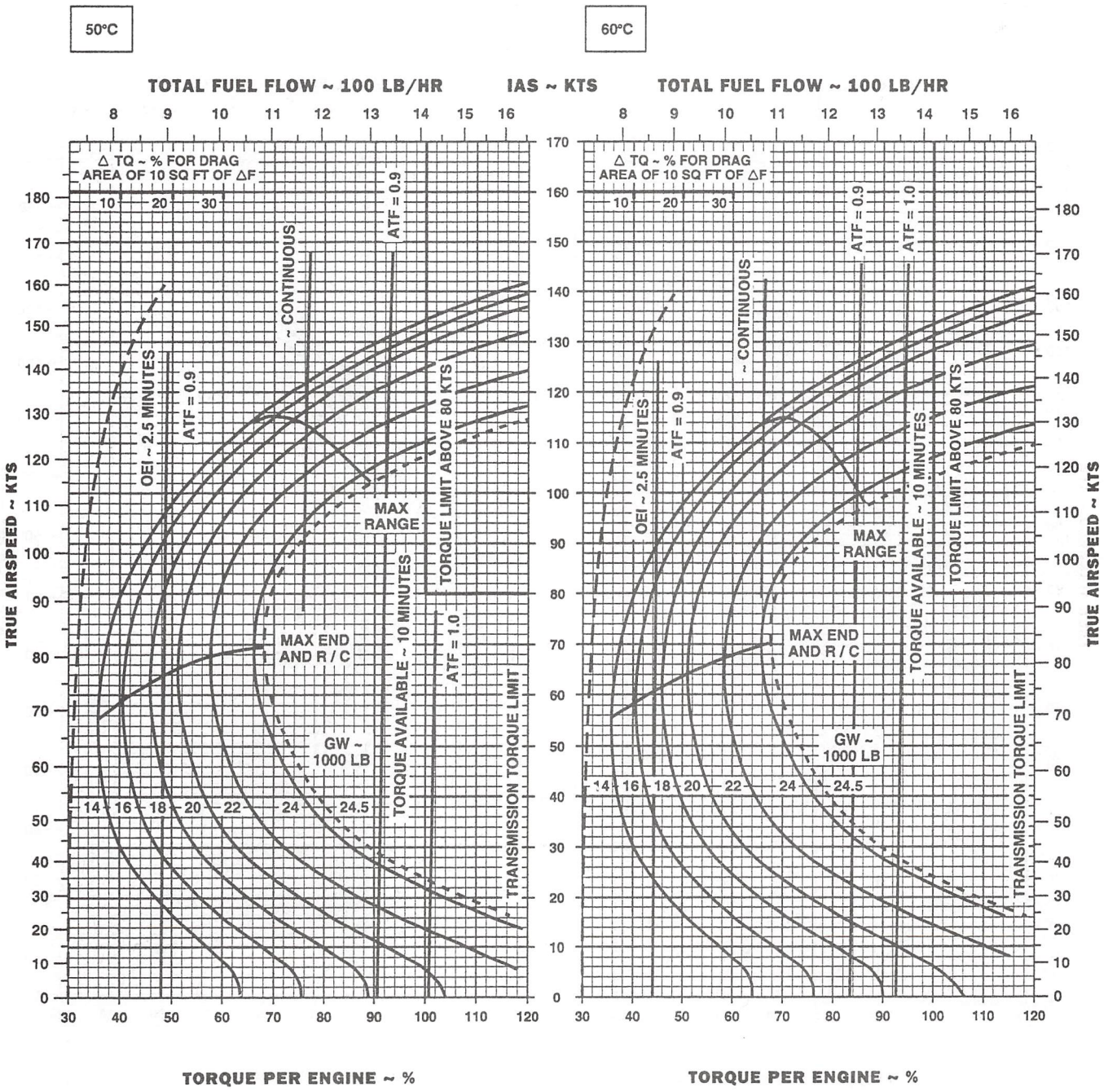

DATA BASIS: FLIGHT TEST

AK0927_6 SA

Figure 7-13. Cruise - Pressure Altitude 2,000 Feet - ETS Installed (Sheet 6 of 6)

CRUISE

CLEAN CONFIGURATION
PRESS ALT: 4000 FT

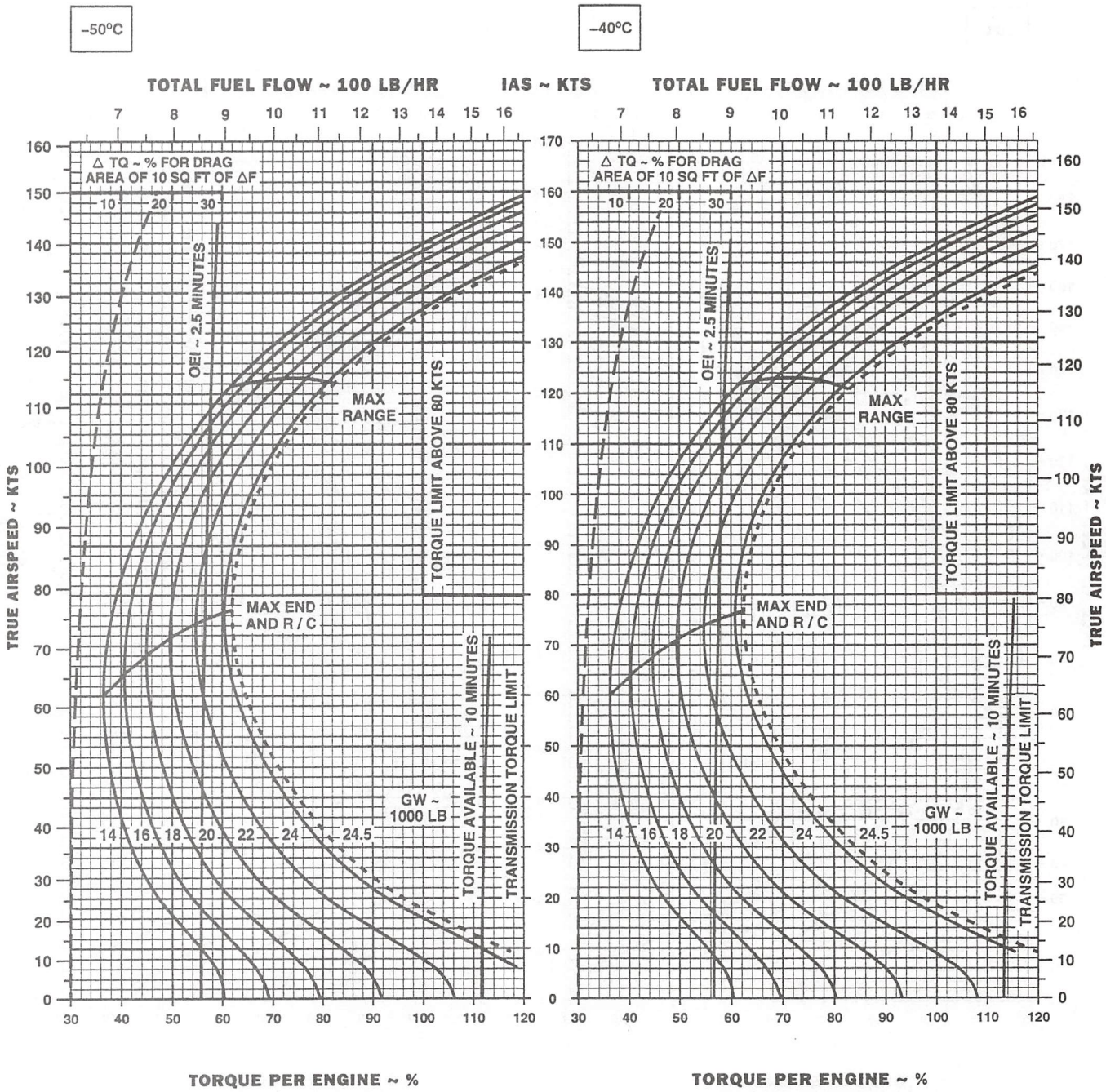

DATA BASIS: FLIGHT TEST

AK0290_1
SA

Figure 7-14. Cruise - Pressure Altitude 4,000 Feet - Clean (Sheet 1 of 6)

CRUISE

CLEAN CONFIGURATION
PRESS ALT: 4000 FT

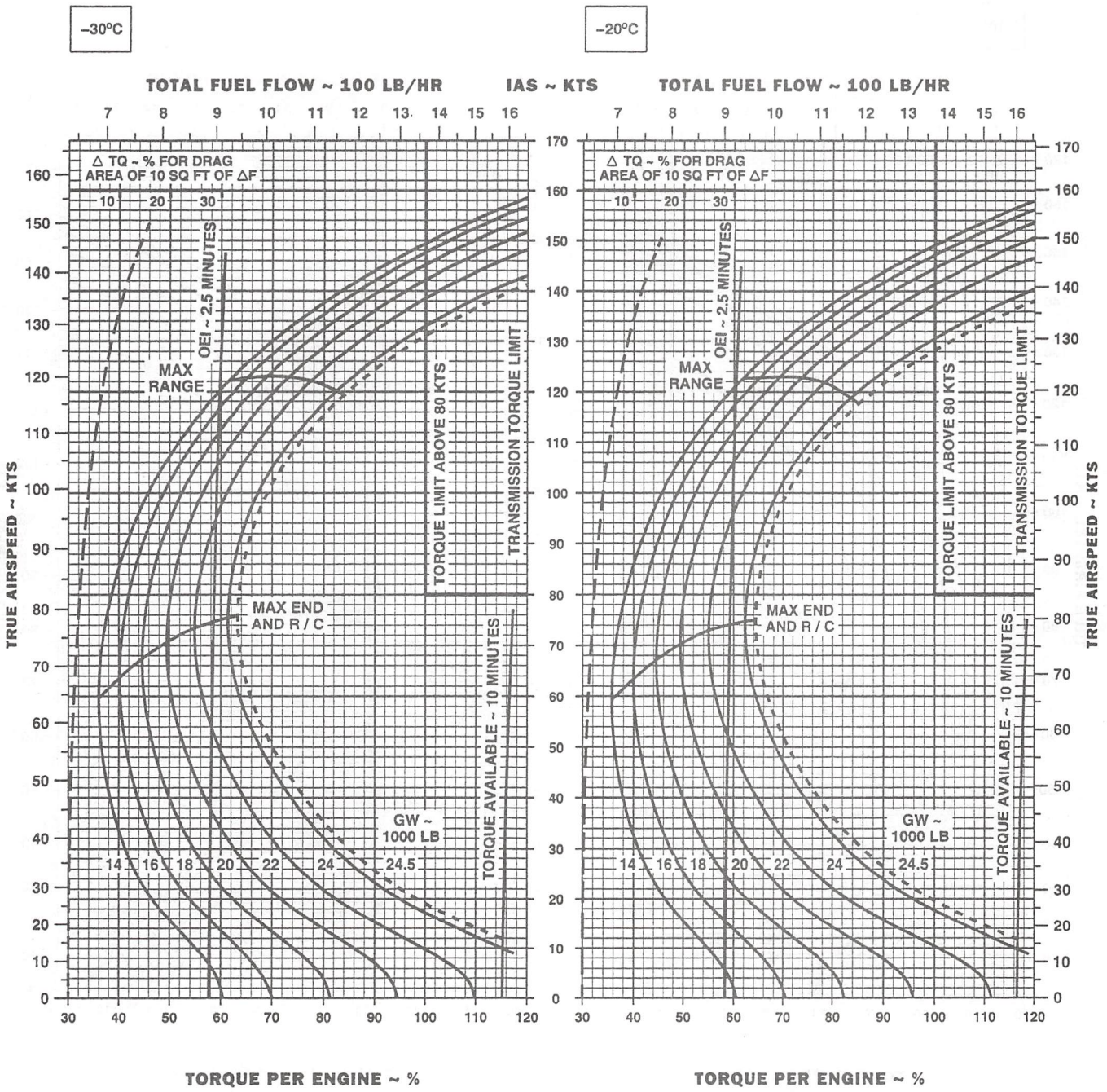

DATA BASIS: FLIGHT TEST

AK0290_2
SA

Figure 7-14. Cruise - Pressure Altitude 4,000 Feet - Clean (Sheet 2 of 6)

CRUISE

CLEAN CONFIGURATION
PRESS ALT: 4000 FT

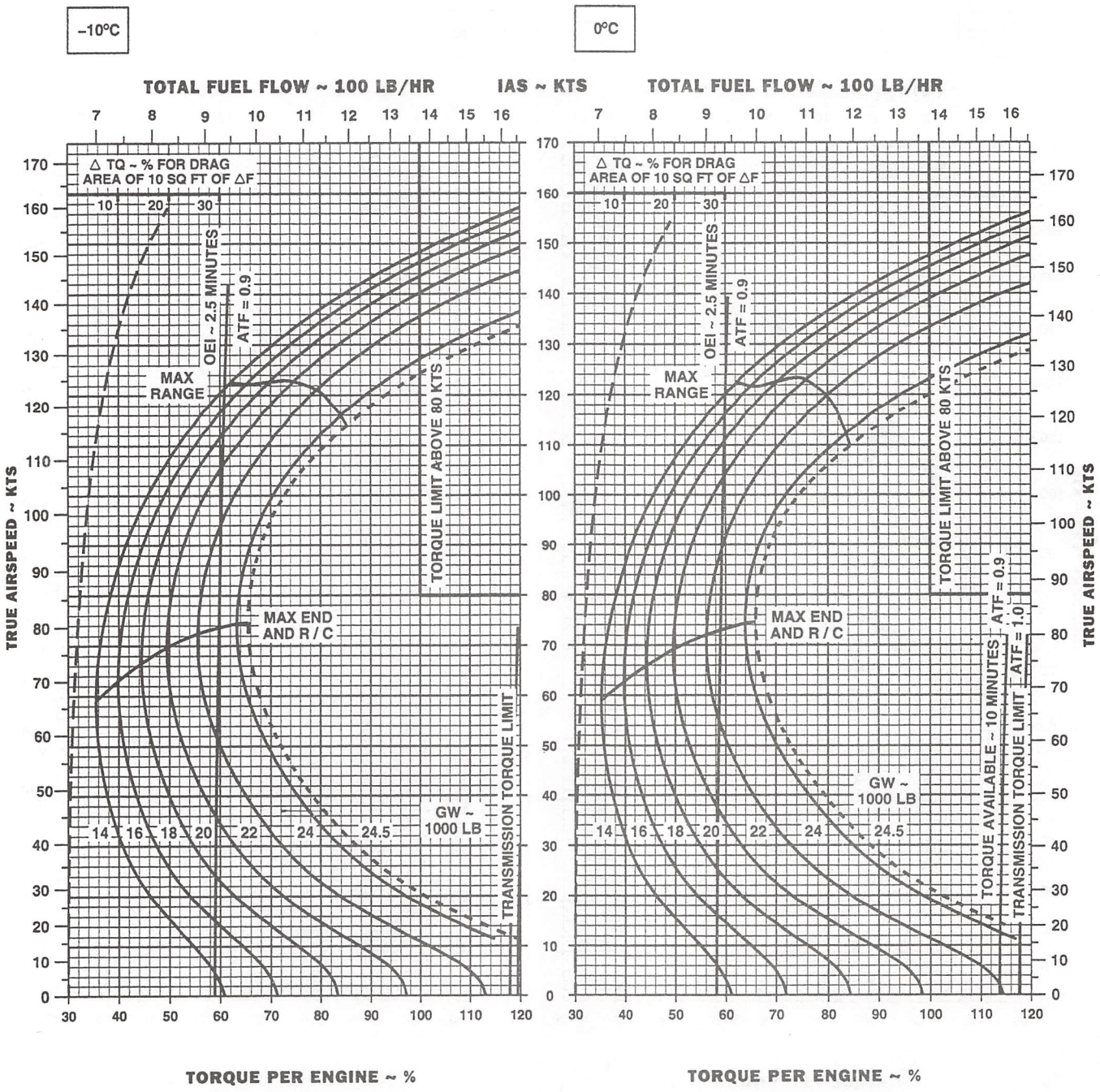

DATA BASIS: FLIGHT TEST

AK0290_3
SA

Figure 7-14. Cruise - Pressure Altitude 4,000 Feet - Clean (Sheet 3 of 6)

CRUISE

CLEAN CONFIGURATION
PRESS ALT: 4000 FT

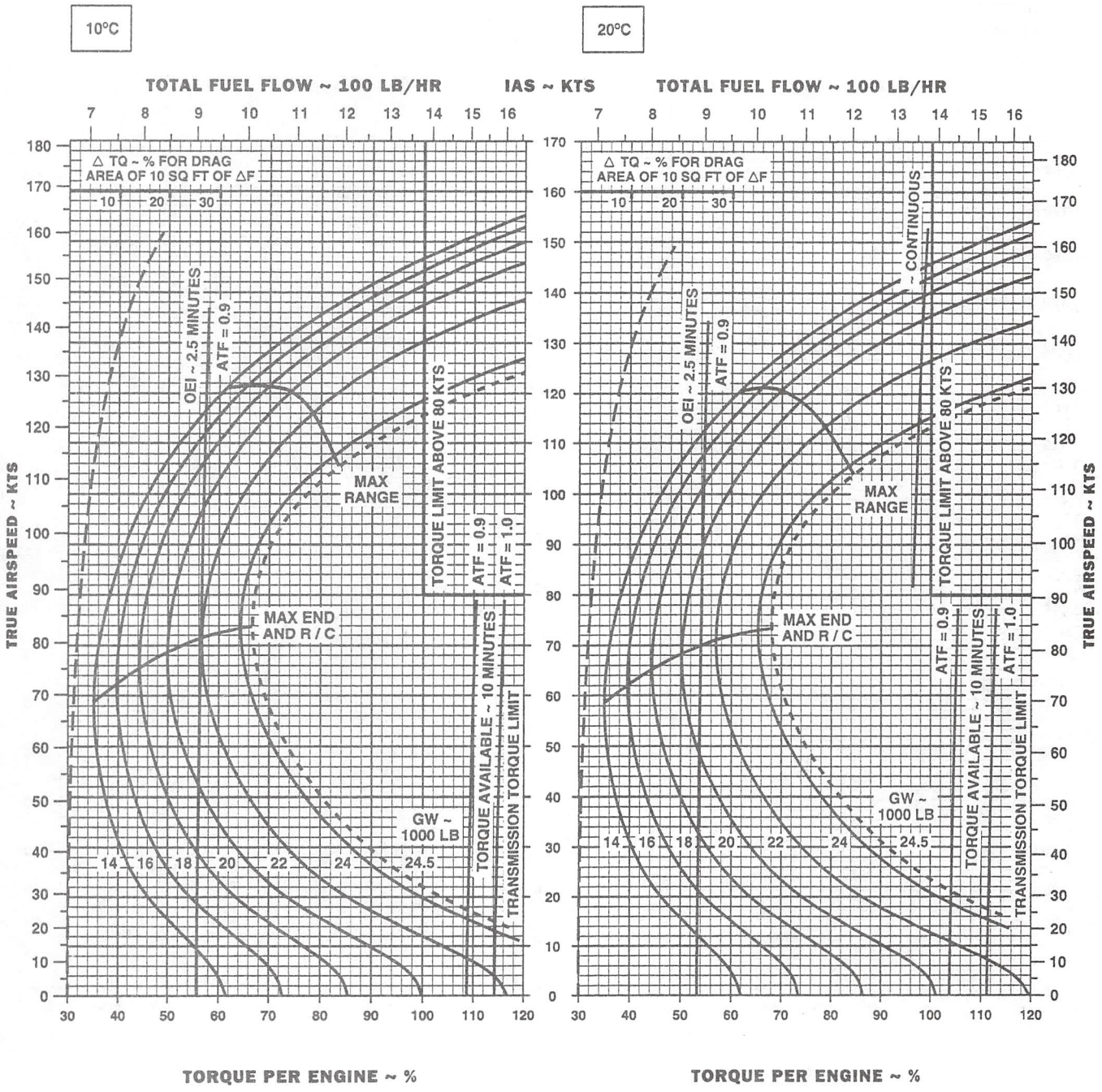

DATA BASIS: FLIGHT TEST

AK0290_4
SA

Figure 7-14. Cruise - Pressure Altitude 4,000 Feet - Clean (Sheet 4 of 6)

CRUISE

CLEAN CONFIGURATION
PRESS ALT: 4000 FT

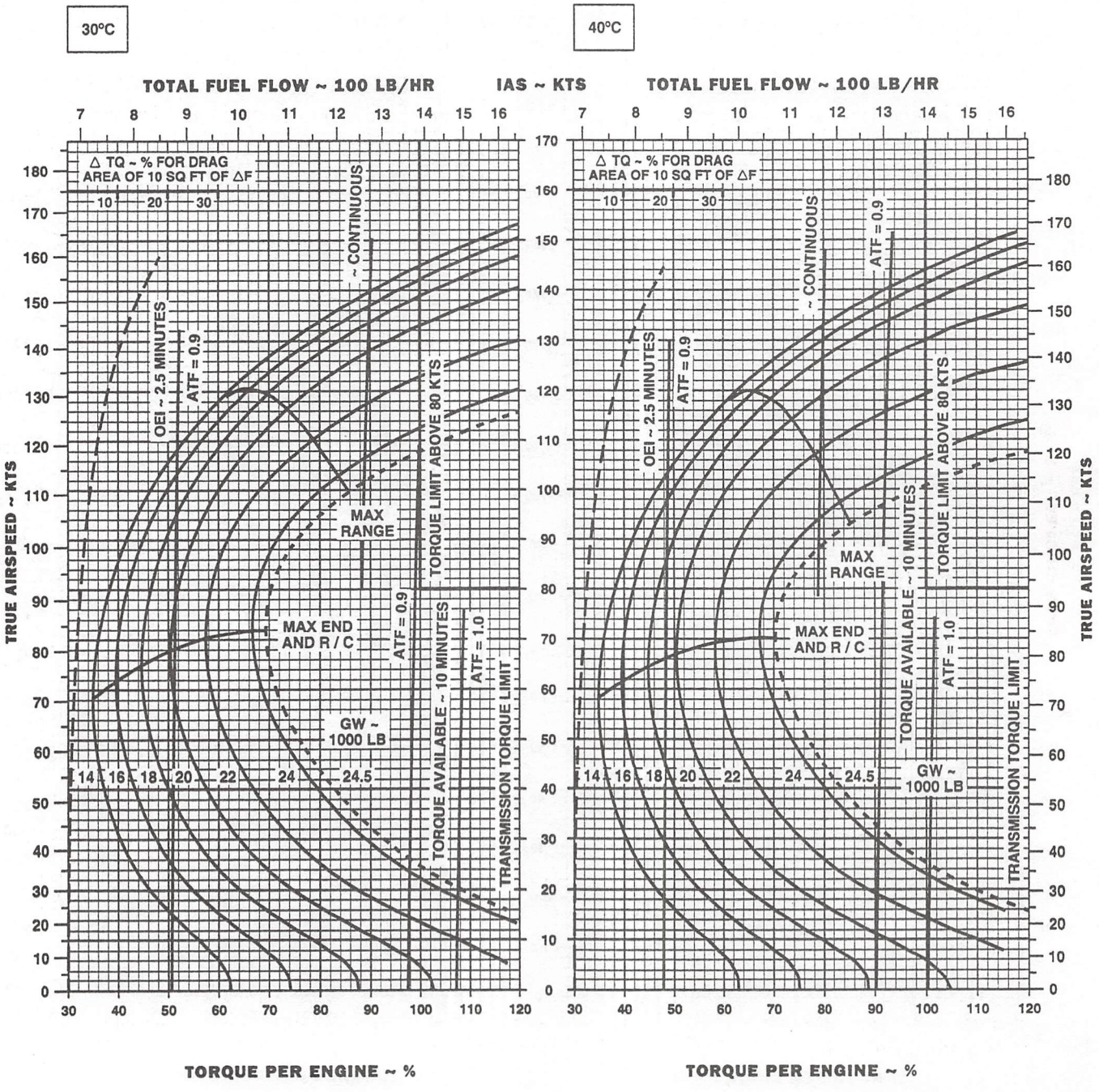

DATA BASIS: FLIGHT TEST

AK0290_5
SA

Figure 7-14. Cruise - Pressure Altitude 4,000 Feet - Clean (Sheet 5 of 6)

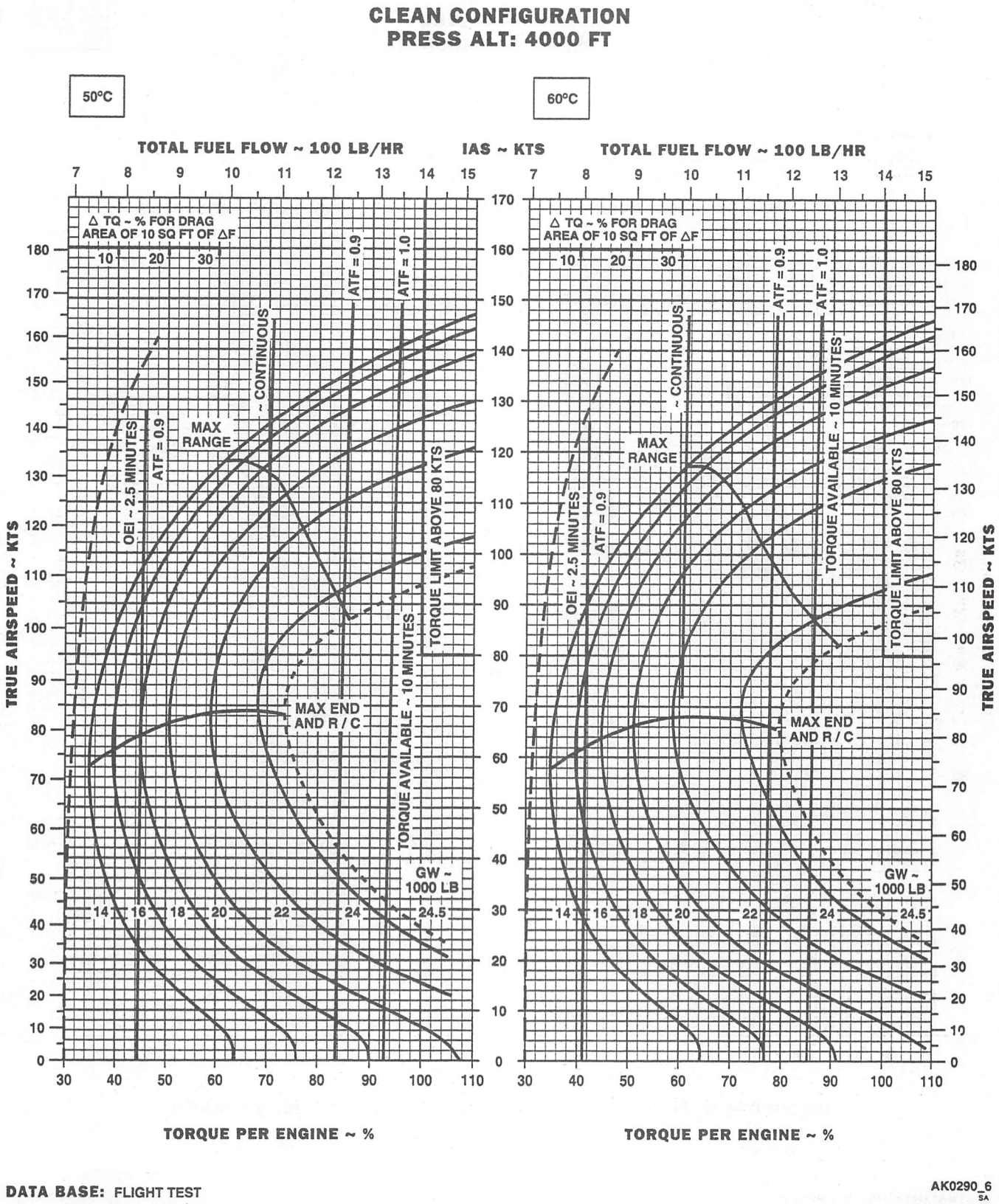

DATA BASE: FLIGHT TEST

AK0290_6 SA

Figure 7-14. Cruise - Pressure Altitude 4,000 Feet - Clean (Sheet 6 of 6)

CRUISE
ETS INSTALLED
PRESS ALT: 4000 FT

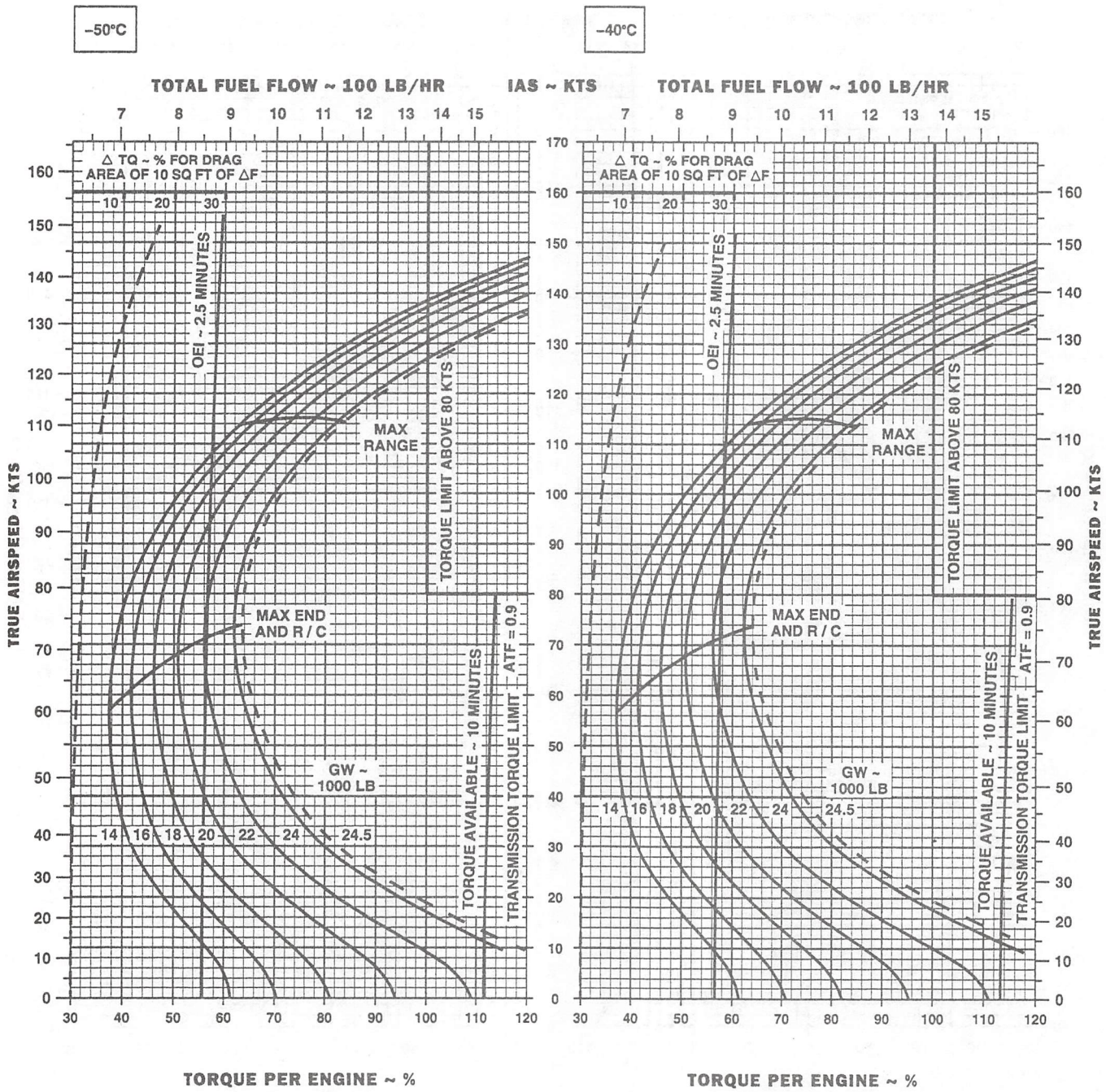

DATA BASIS: FLIGHT TEST

AK0928_1
SA

Figure 7-15. Cruise - Pressure Altitude 4,000 Feet - ETS Installed (Sheet 1 of 6)

CRUISE
ETS INSTALLED
PRESS ALT: 4000 FT

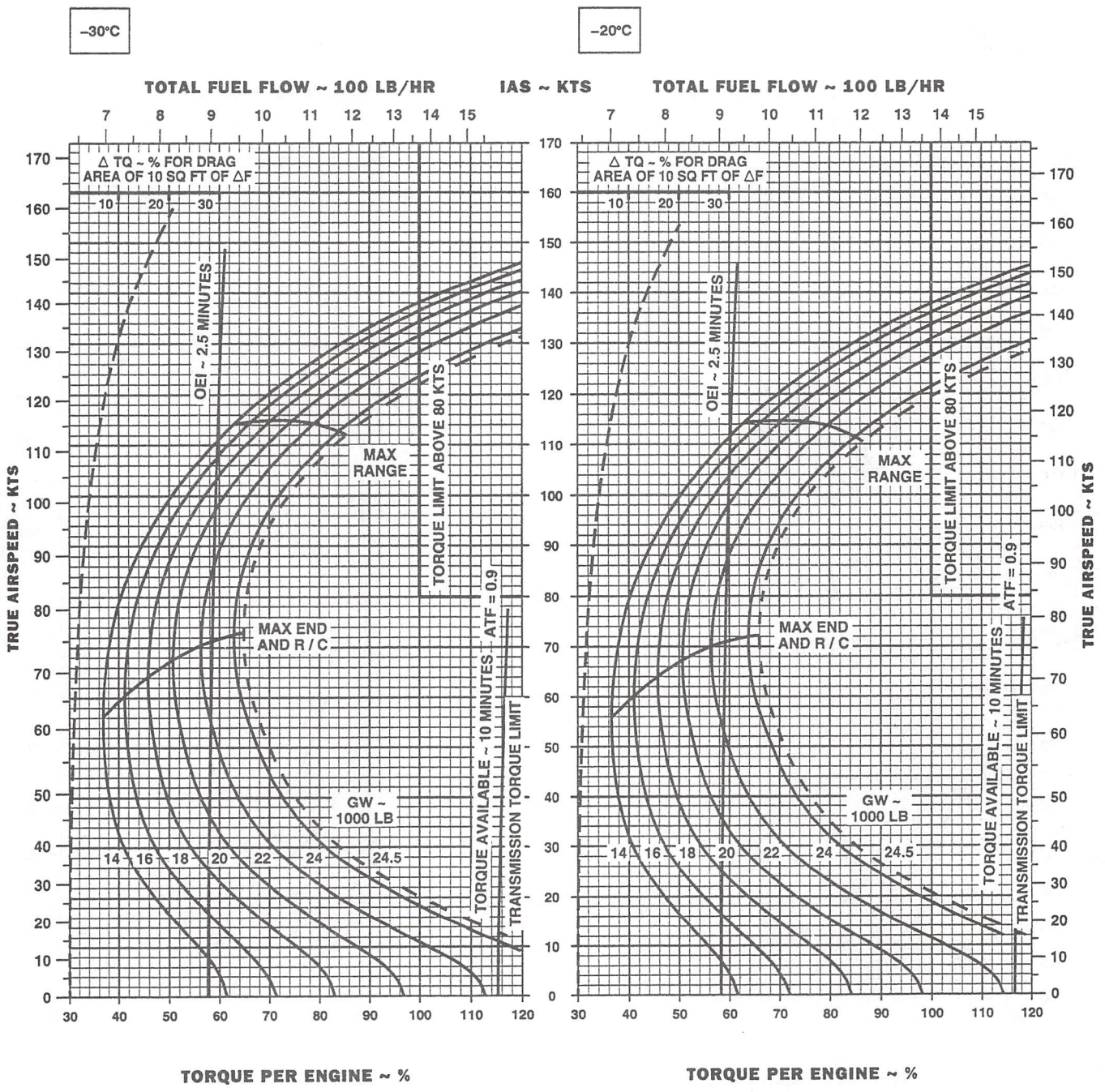

DATA BASIS: FLIGHT TEST

AK0928_2
SA

Figure 7-15. Cruise - Pressure Altitude 4,000 Feet - ETS Installed (Sheet 2 of 6)

CRUISE
ETS INSTALLED
PRESS ALT: 4000 FT

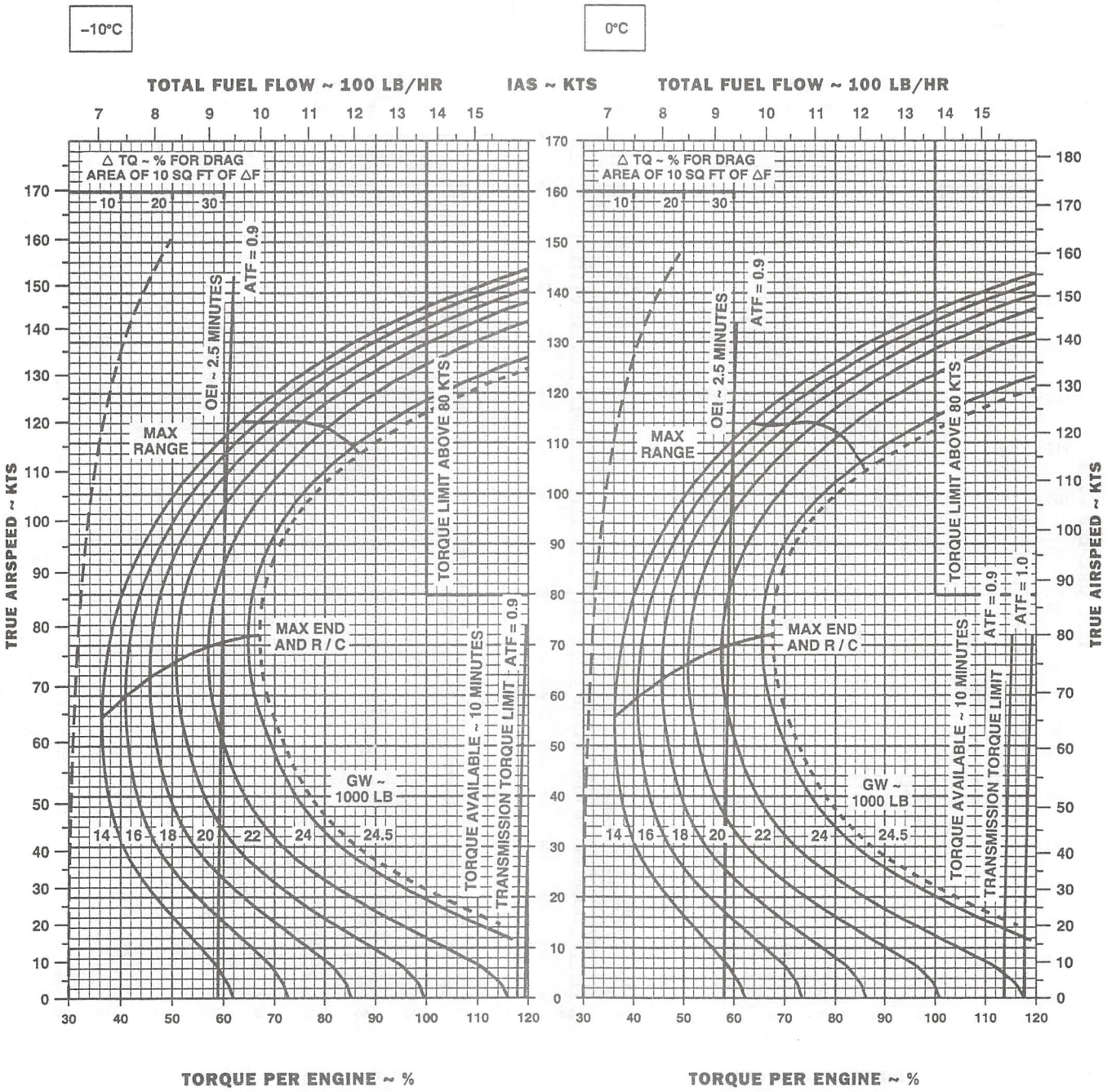

DATA BASIS: FLIGHT TEST

AK0928_3
SA

Figure 7-15. Cruise - Pressure Altitude 4,000 Feet - ETS Installed (Sheet 3 of 6)

CRUISE
ETS INSTALLED
PRESS ALT: 4000 FT

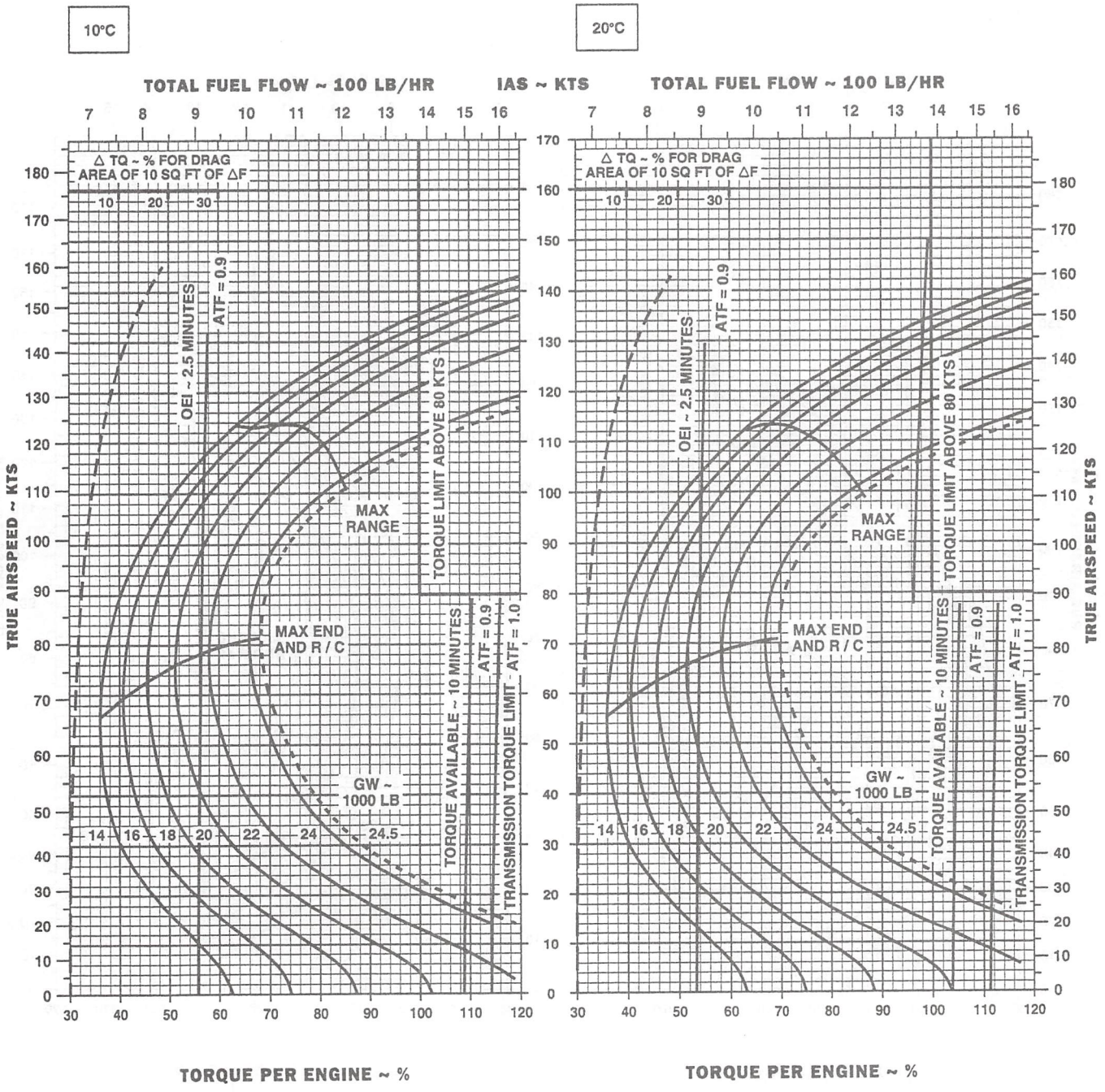

DATA BASIS: FLIGHT TEST

AK0928_4
SA

Figure 7-15. Cruise - Pressure Altitude 4,000 Feet - ETS Installed (Sheet 4 of 6)

CRUISE

ETS INSTALLED

PRESS ALT: 4000 FT

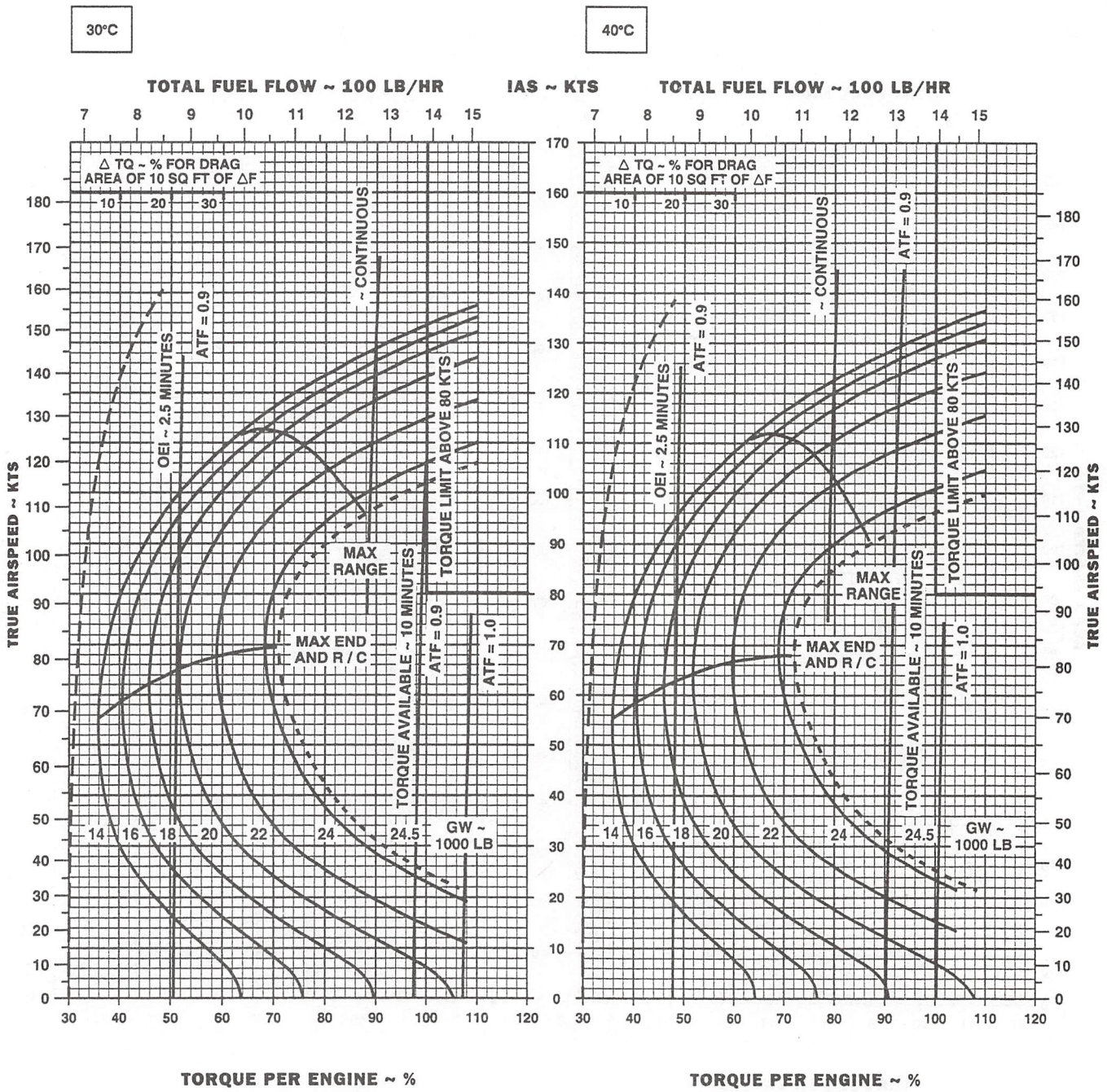

DATA BASIS: FLIGHT TEST

AK0928_5
SA

Figure 7-15. Cruise - Pressure Altitude 4,000 Feet - ETS Installed (Sheet 5 of 6)

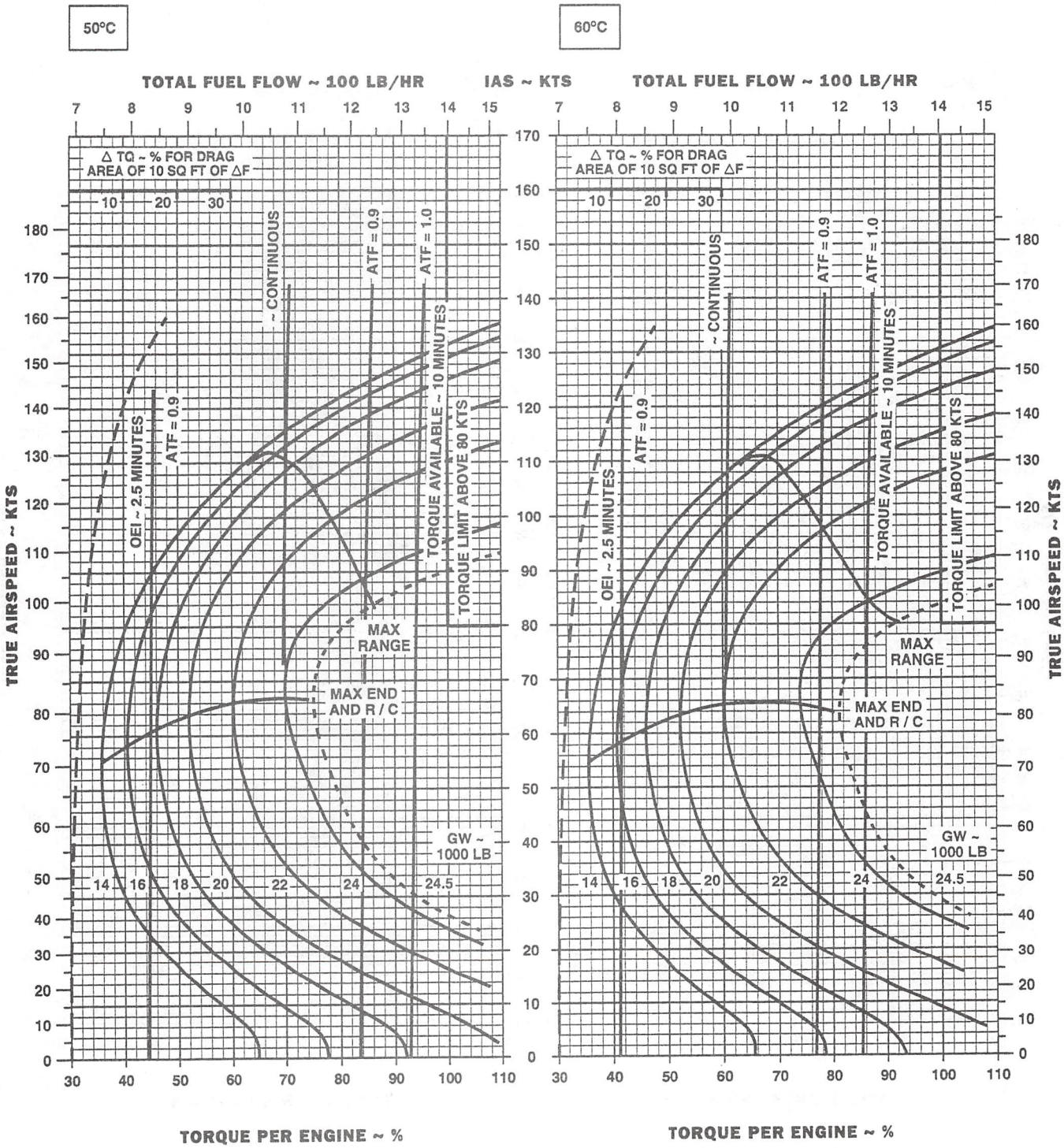

Figure 7-15. Cruise - Pressure Altitude 4,000 Feet - ETS Installed (Sheet 6 of 6)

CRUISE
CLEAN CONFIGURATION
PRESS ALT: 6000 FT

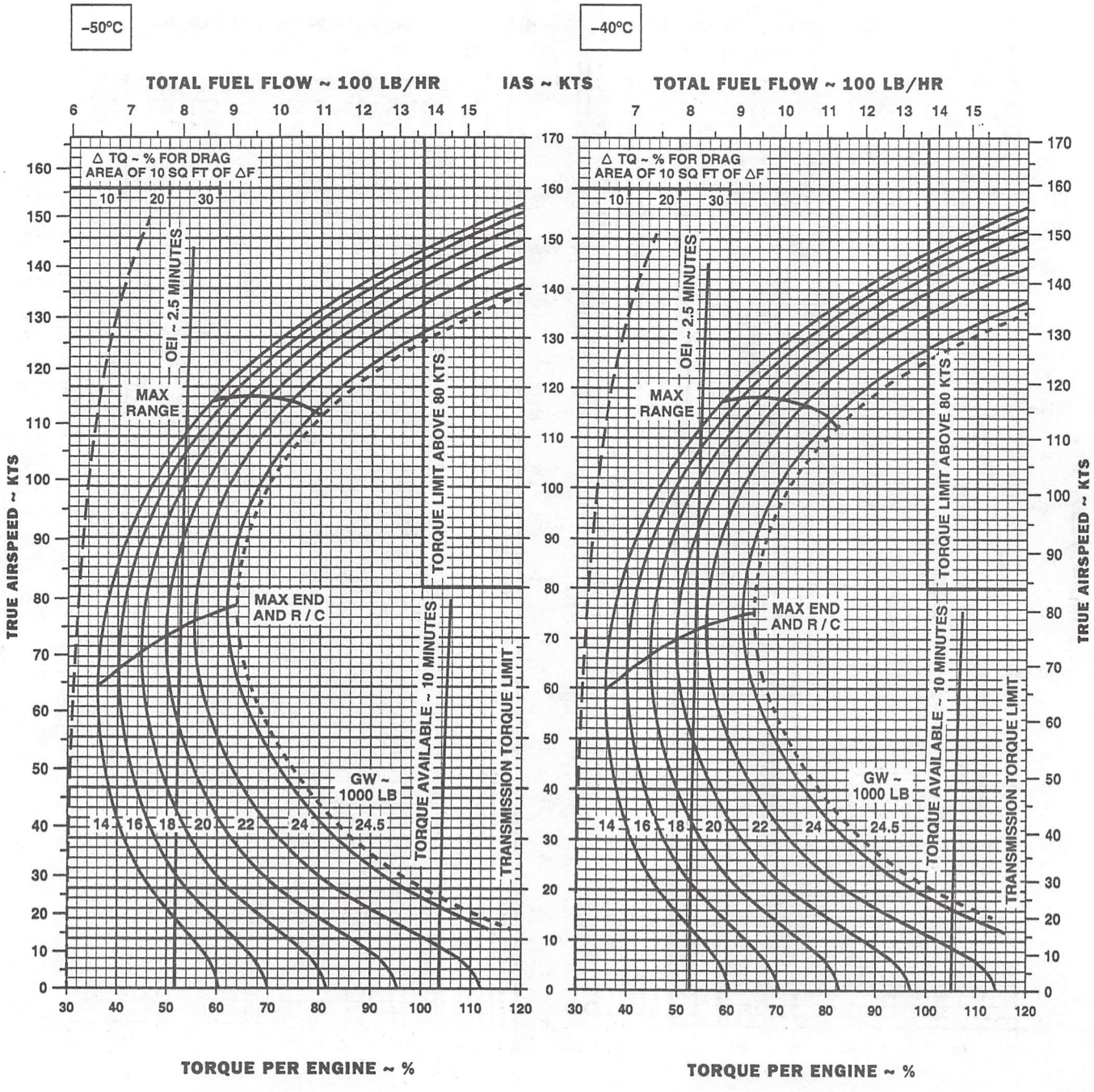

DATA BASIS: FLIGHT TEST

AK0291_1
SA

Figure 7-16. Cruise - Pressure Altitude 6,000 Feet - Clean (Sheet 1 of 6)

CRUISE

CLEAN CONFIGURATION
PRESS ALT: 6000 FT

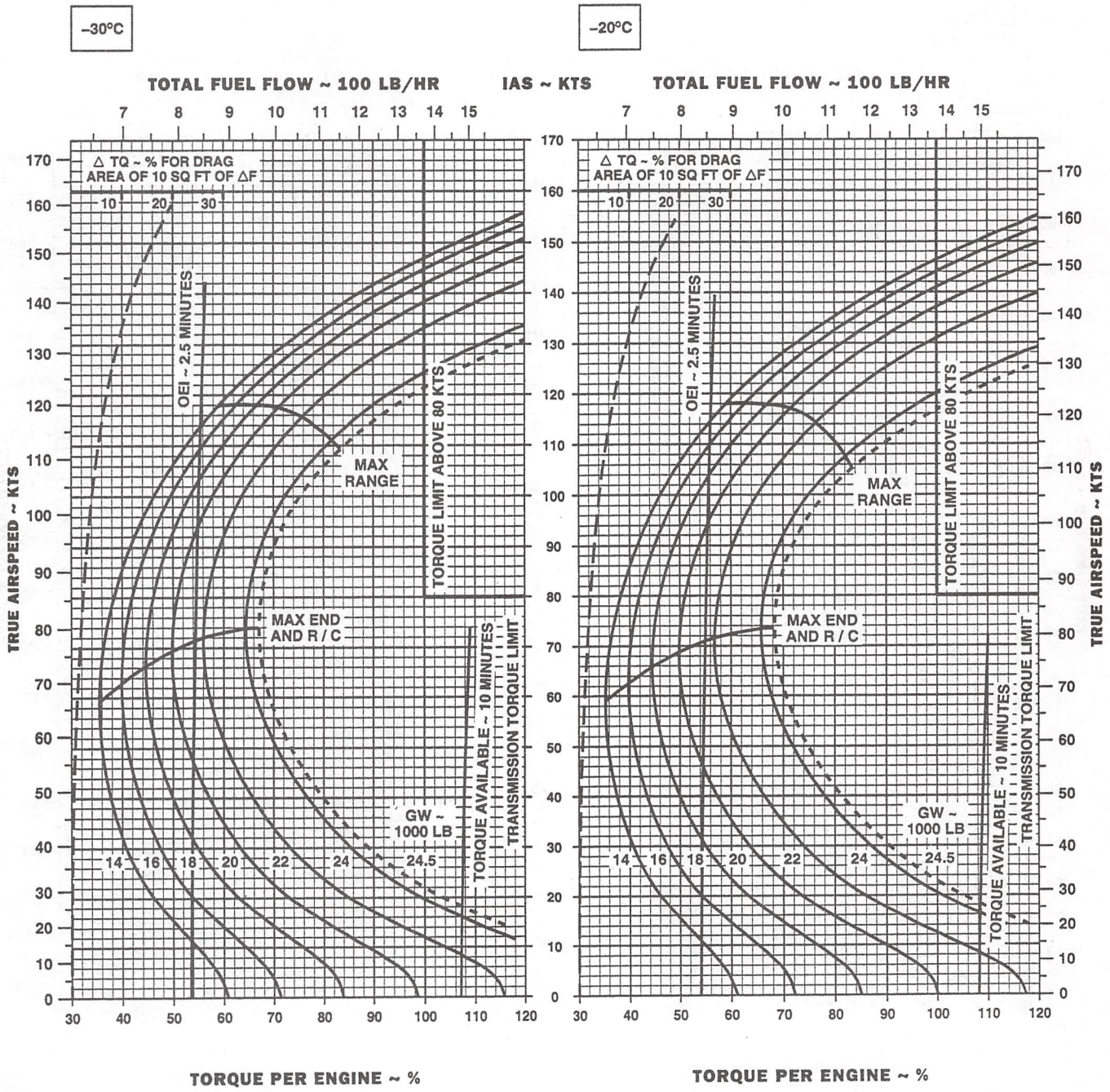

DATA BASIS: FLIGHT TEST

AK0291_2
SA

Figure 7-16. Cruise - Pressure Altitude 6,000 Feet - Clean (Sheet 2 of 6)

CLEAN CONFIGURATION
PRESS ALT: 6000 FT

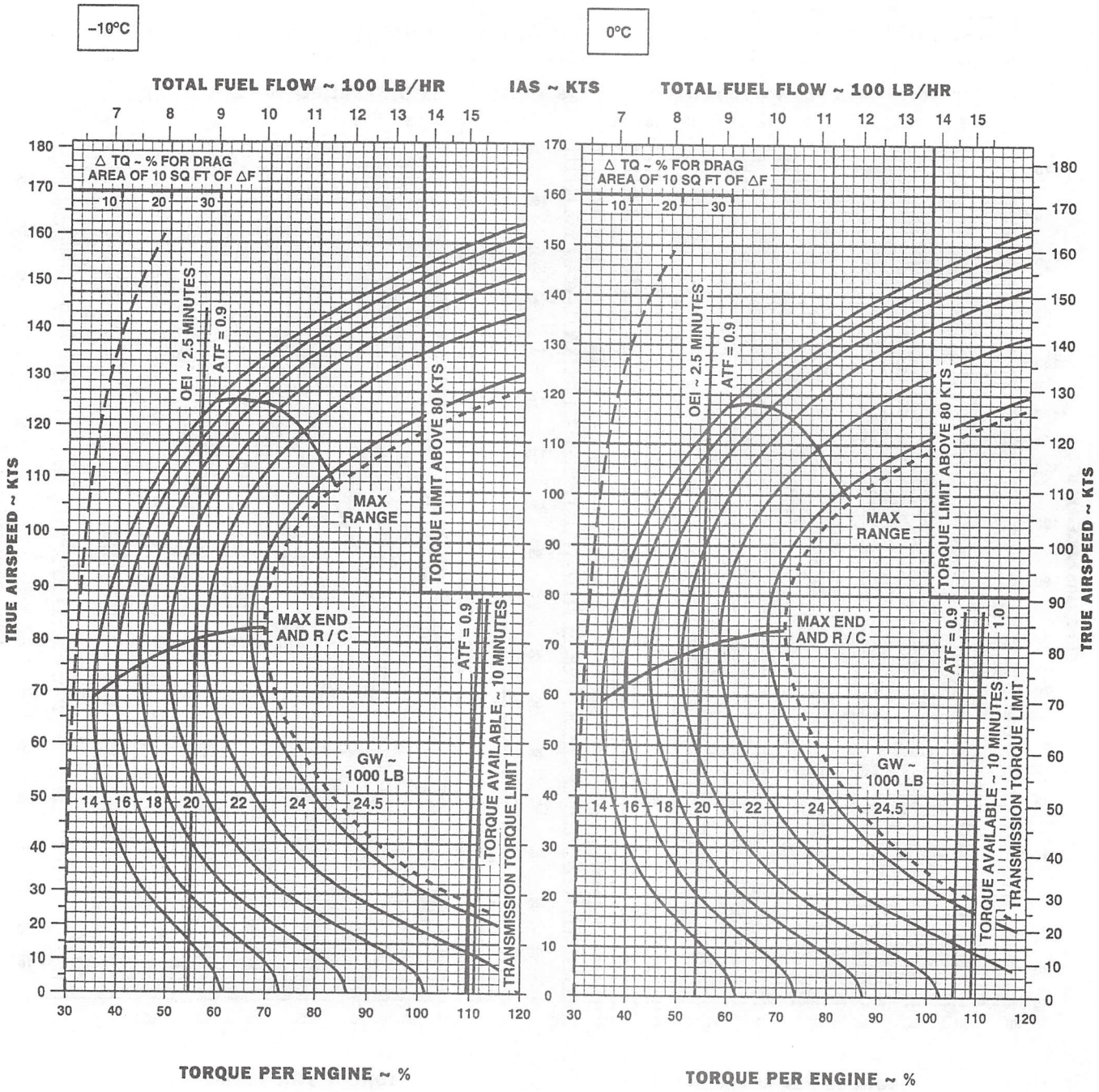

DATA BASE: FLIGHT TEST

AK0291_3
SA

Figure 7-16. Cruise - Pressure Altitude 6,000 Feet - Clean (Sheet 3 of 6)

CRUISE

CLEAN CONFIGURATION
PRESS ALT: 6000 FT

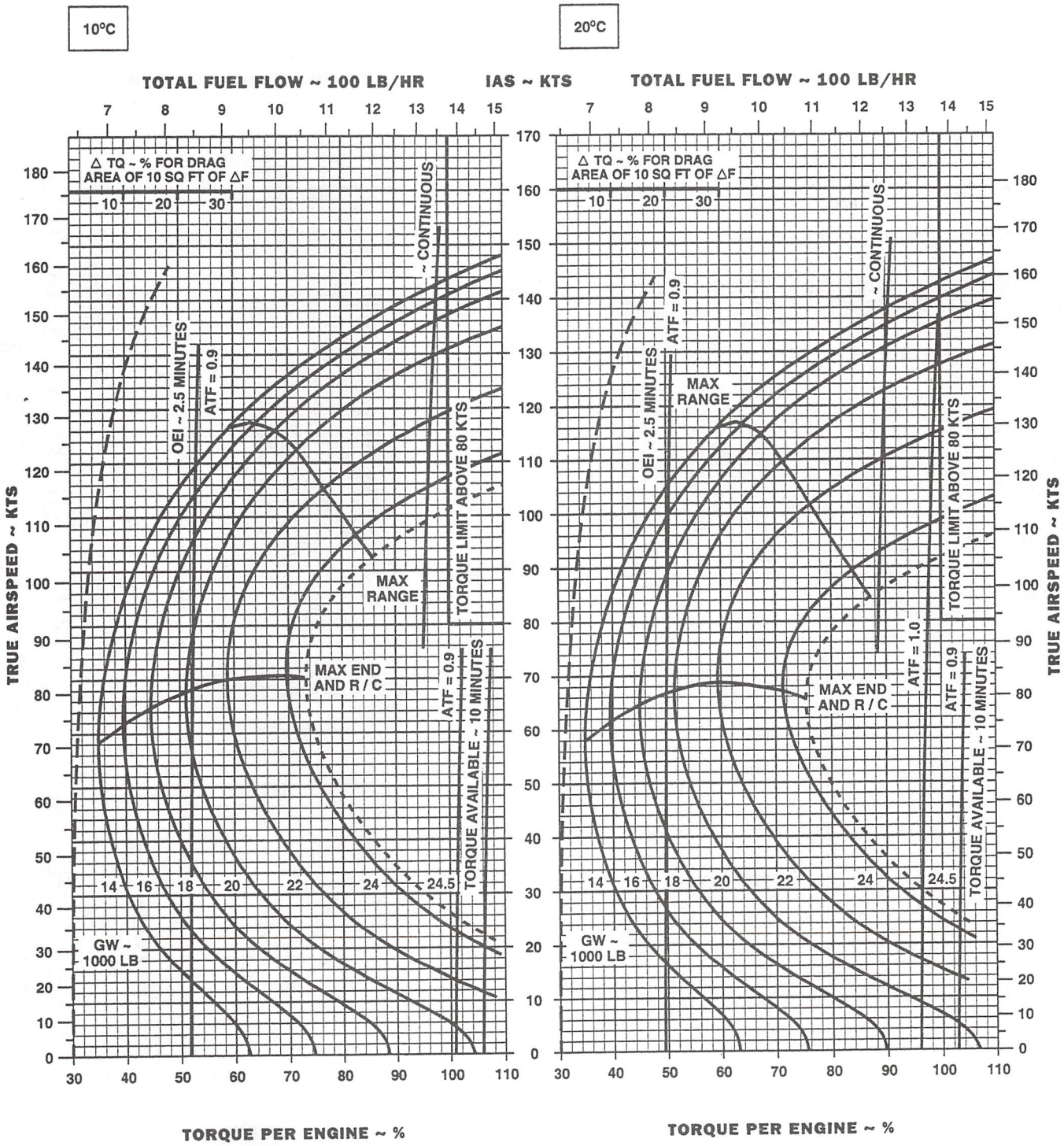

AK0291_4 SA

DATA BASE: FLIGHT TEST

Figure 7-16. Cruise - Pressure Altitude 6,000 Feet - Clean (Sheet 4 of 6)

CRUISE

CLEAN CONFIGURATION
PRESS ALT: 6000 FT

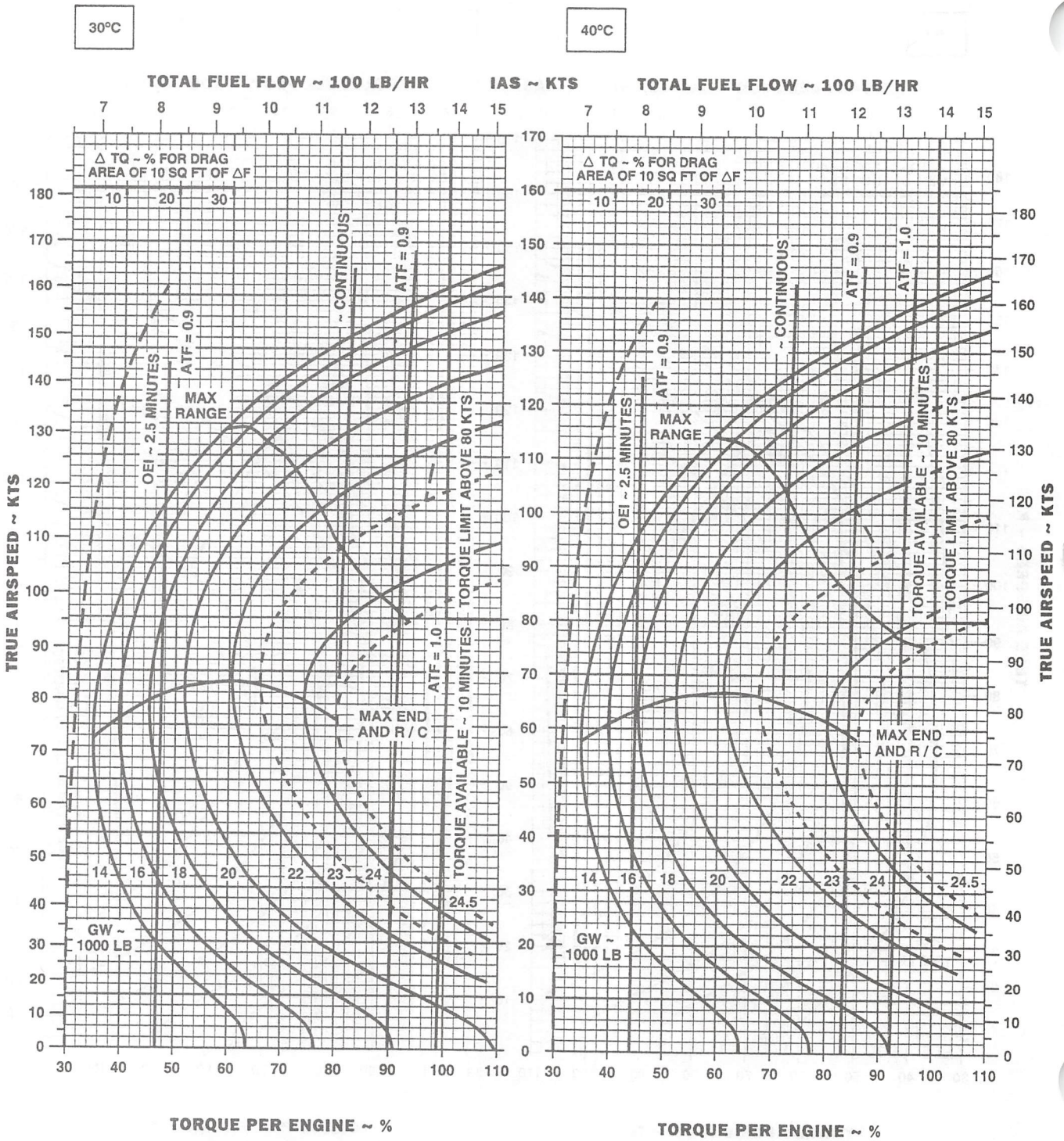

DATA BASIS: FLIGHT TEST

AK0291_5
SA

Figure 7-16. Cruise - Pressure Altitude 6,000 Feet - Clean (Sheet 5 of 6)

CRUISE

CLEAN CONFIGURATION
PRESS ALT: 6000 FT

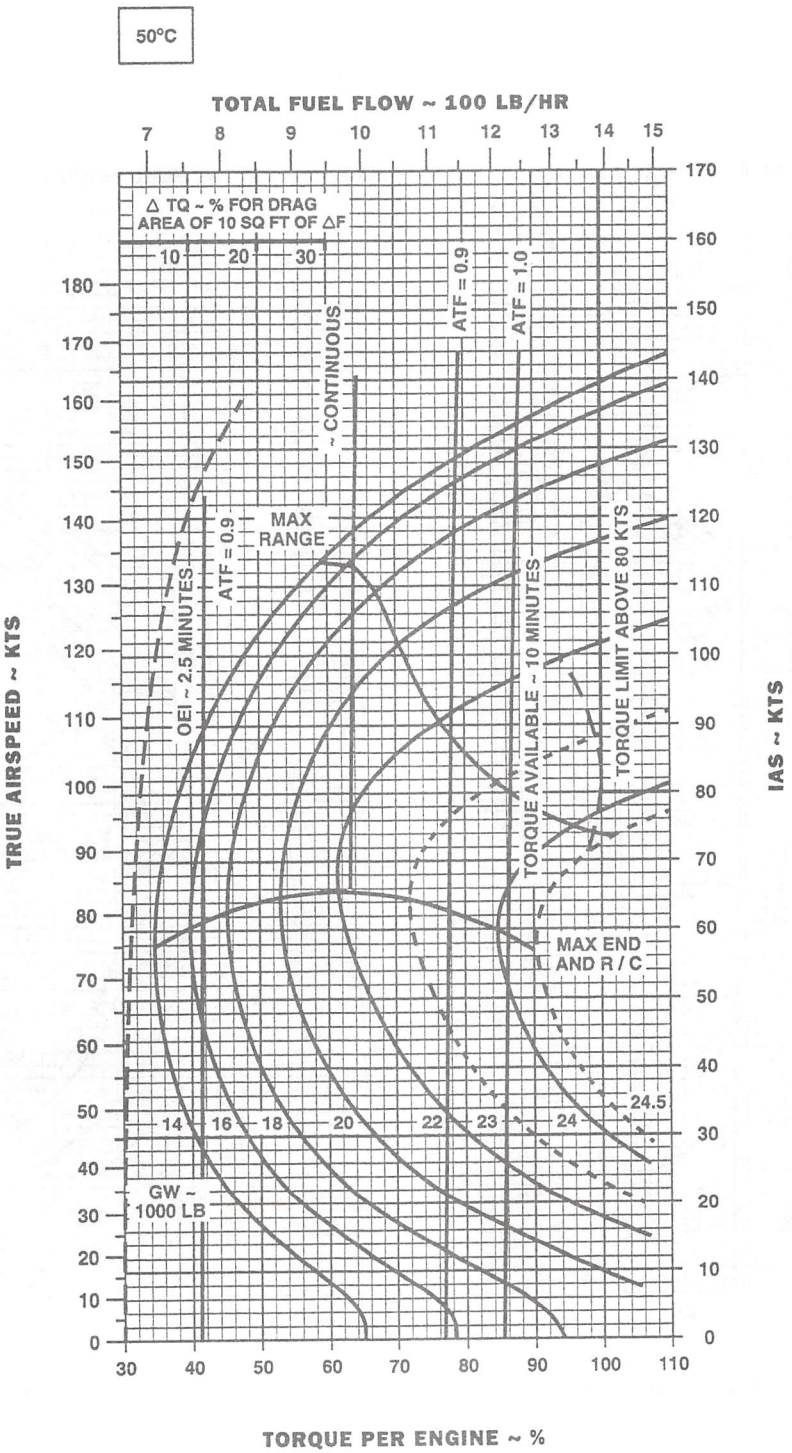

AK0291_6
SA

DATA BASIS: FLIGHT TEST

Figure 7-16. Cruise - Pressure Altitude 6,000 Feet - Clean (Sheet 6 of 6)

CRUISE

ETS INSTALLED
PRESS ALT: 6000 FT

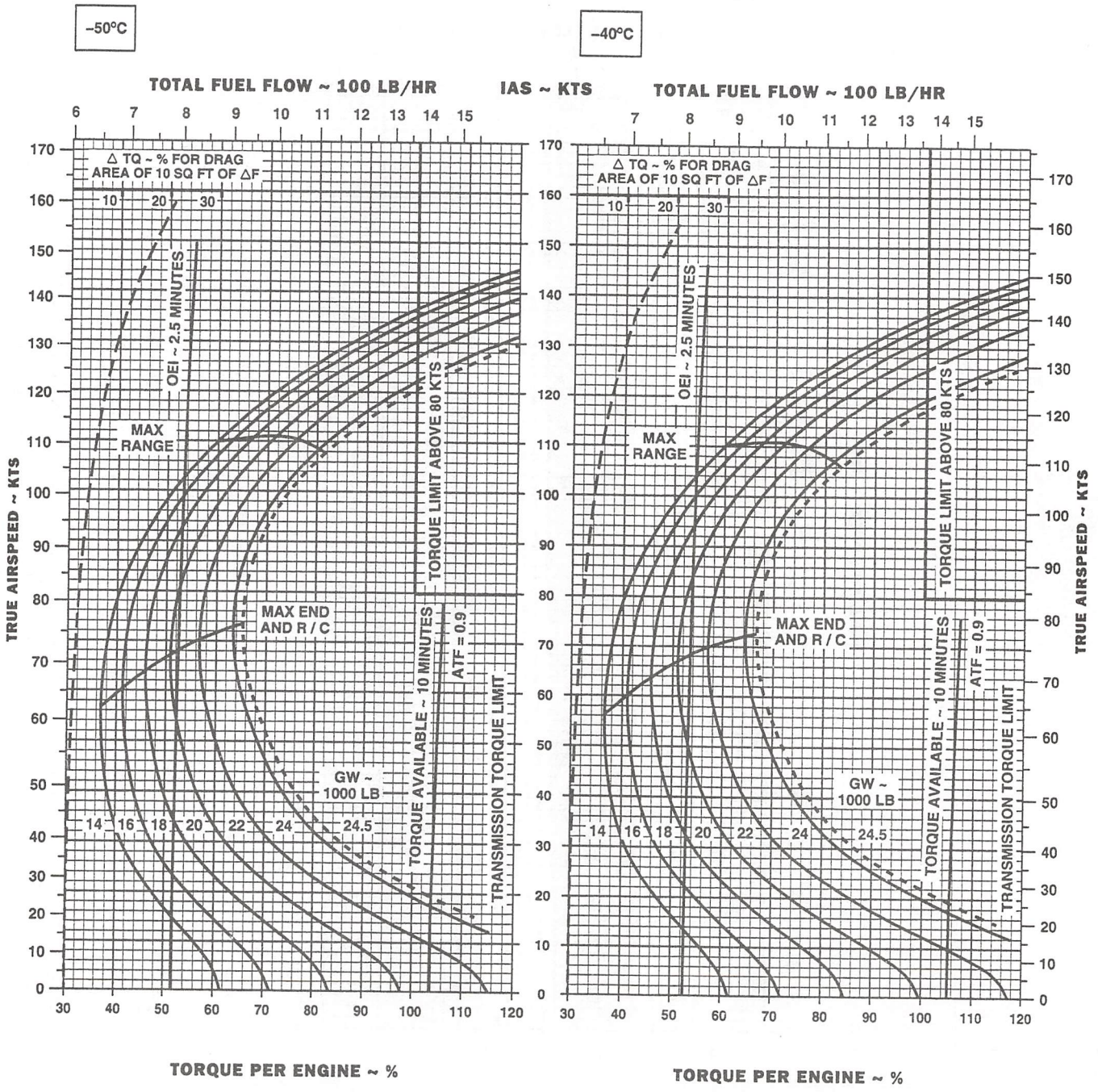

DATA BASIS: FLIGHT TEST

AK0929_1
SA

Figure 7-17. Cruise - Pressure Altitude 6,000 Feet - ETS Installed (Sheet 1 of 6)

CRUISE

ETS INSTALLED
PRESS ALT: 6000 FT

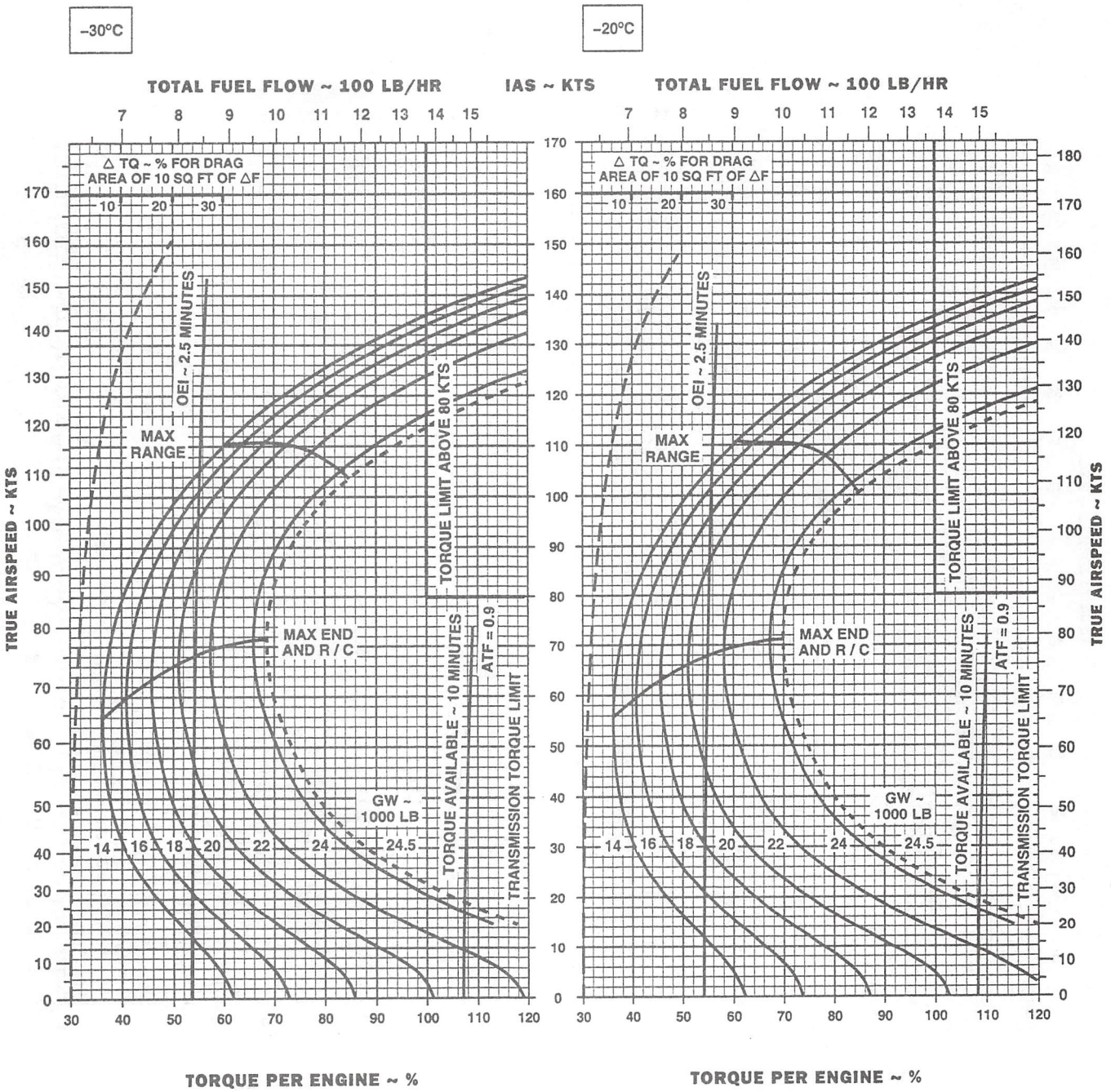

DATA BASIS: FLIGHT TEST

AK0929_2
SA

Figure 7-17. Cruise - Pressure Altitude 6,000 Feet - ETS Installed (Sheet 2 of 6)

CRUISE

ETS INSTALLED
PRESS ALT: 6000 FT

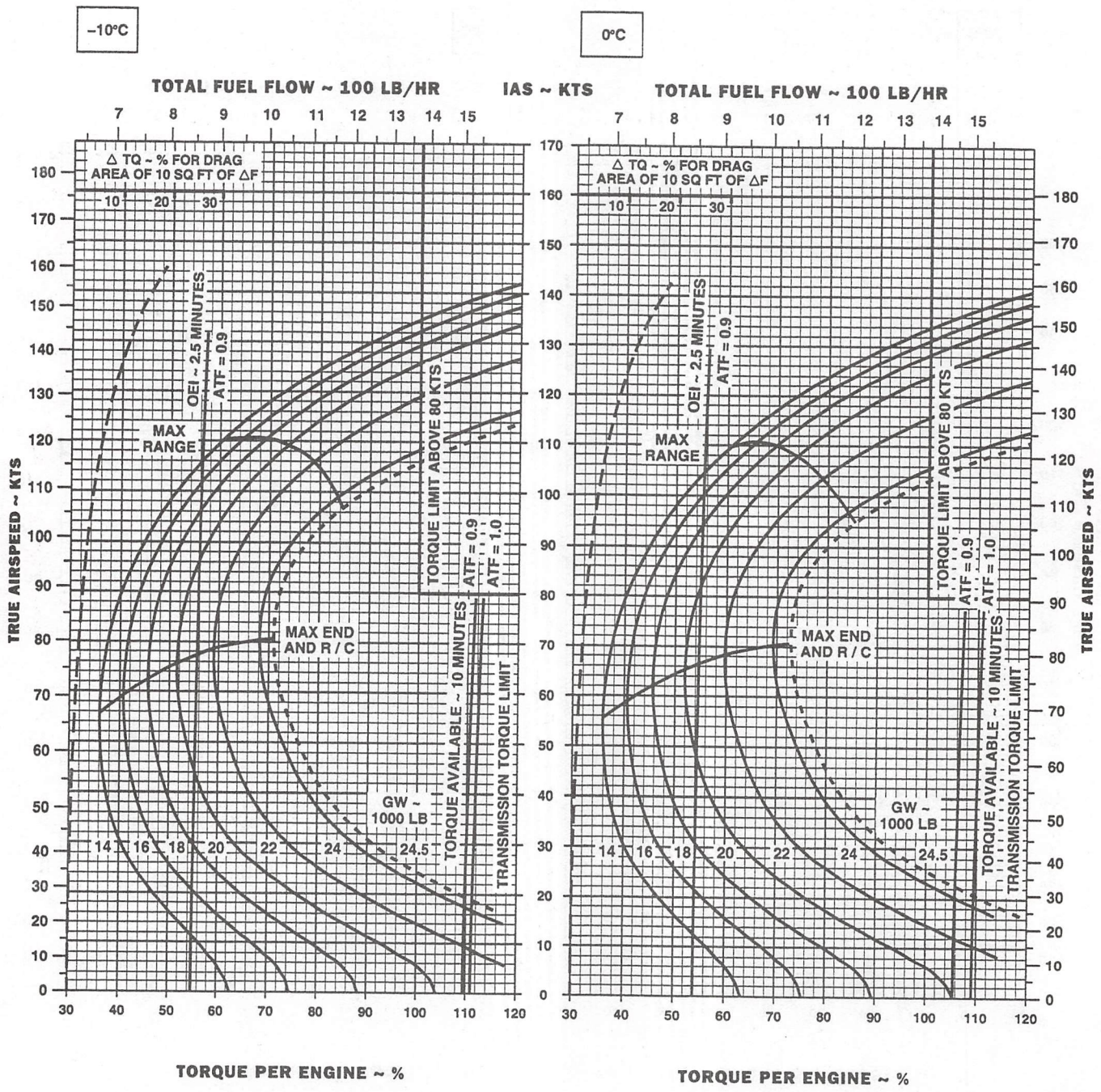

DATA BASIS: FLIGHT TEST

AK0929_3
SA

Figure 7-17. Cruise - Pressure Altitude 6,000 Feet - ETS Installed (Sheet 3 of 6)

CRUISE

ETS INSTALLED
PRESS ALT: 6000 FT

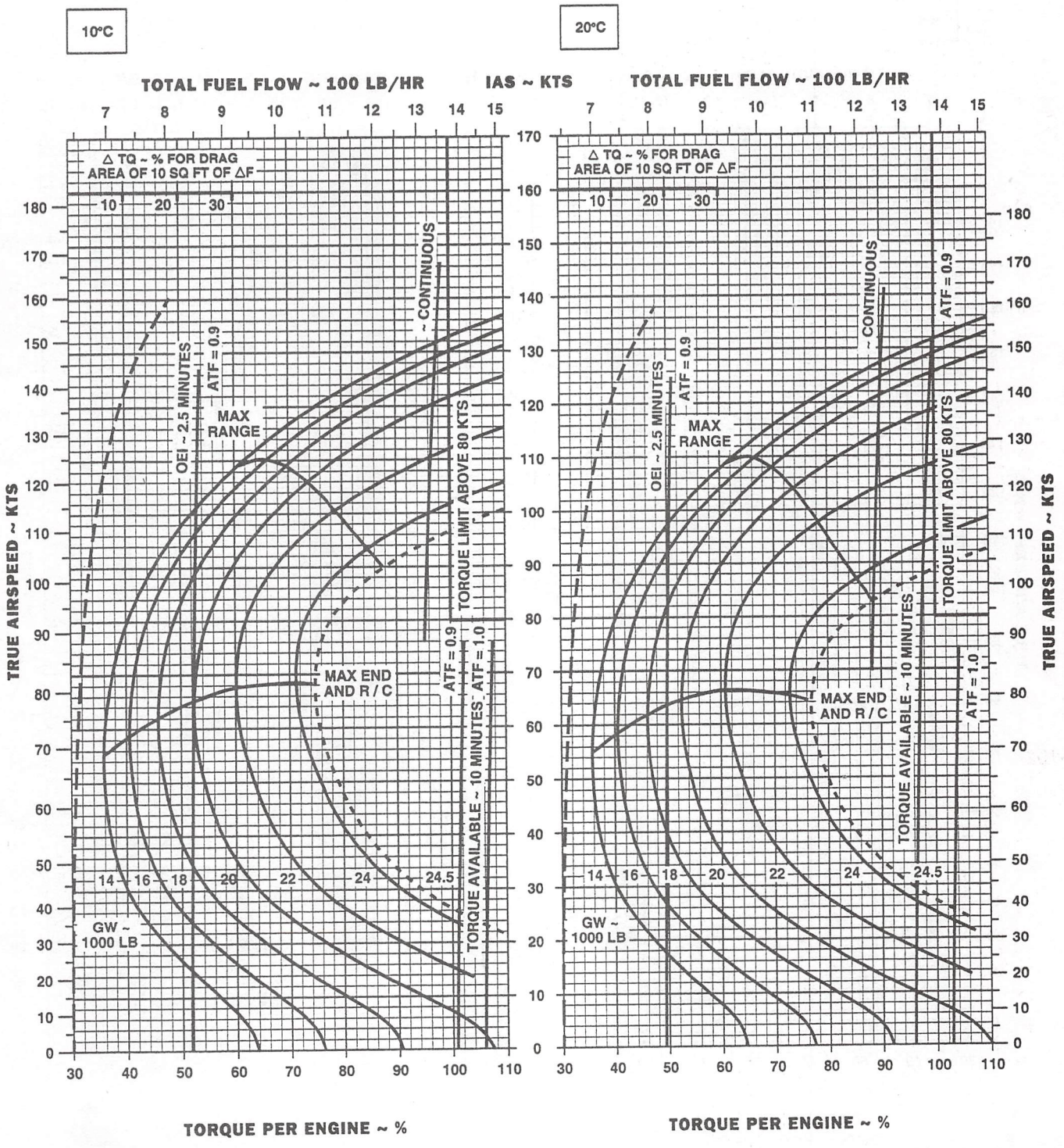

DATA BASE: FLIGHT TEST

Figure 7-17. Cruise - Pressure Altitude 6,000 Feet - ETS Installed (Sheet 4 of 6)

CRUISE

ETS INSTALLED
PRESS ALT: 6000 FT

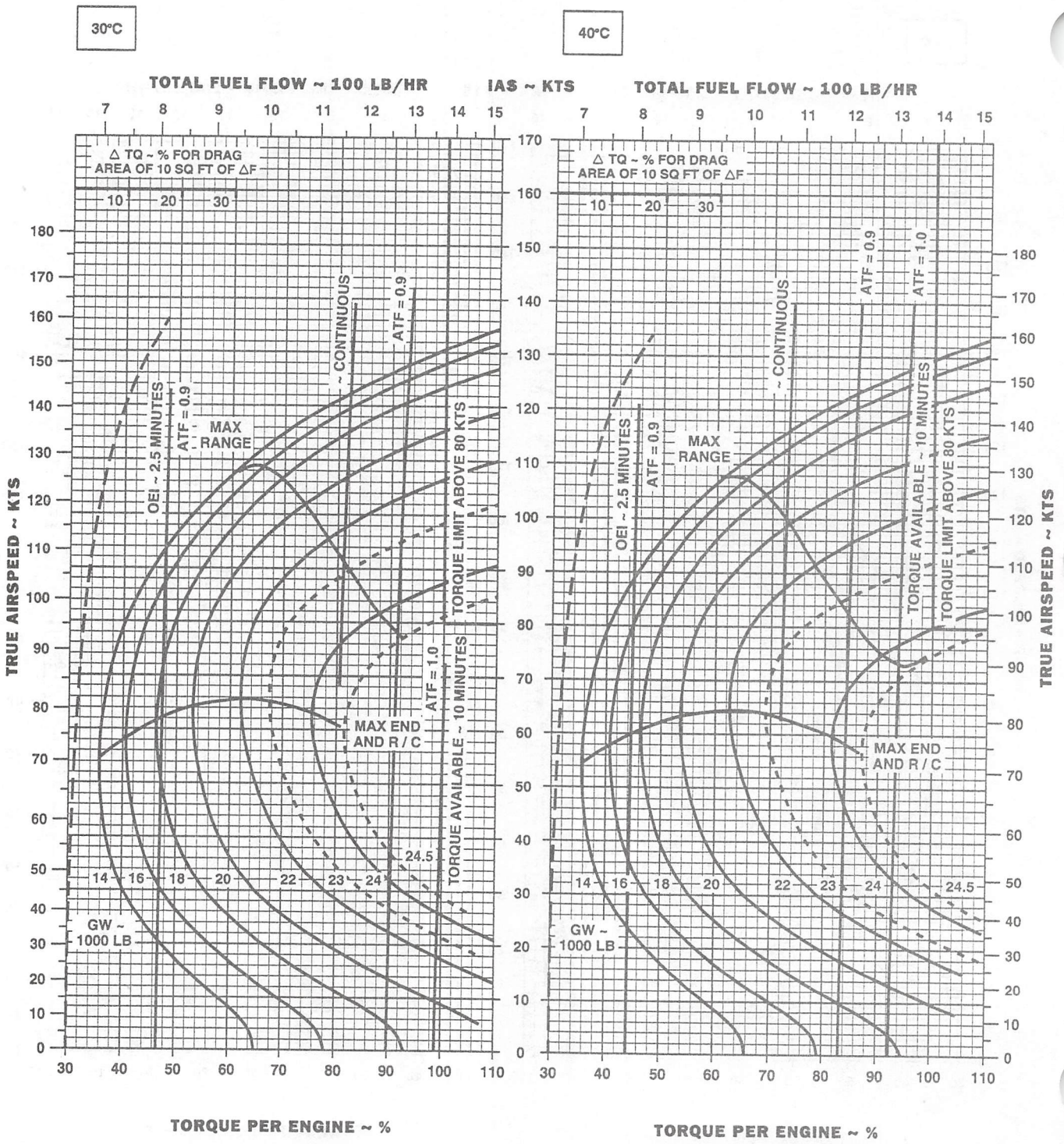

DATA BASIS: FLIGHT TEST

AK0929_5 SA

Figure 7-17. Cruise - Pressure Altitude 6,000 Feet - ETS Installed (Sheet 5 of 6)

CRUISE

ETS INSTALLED
PRESS ALT: 6000 FT

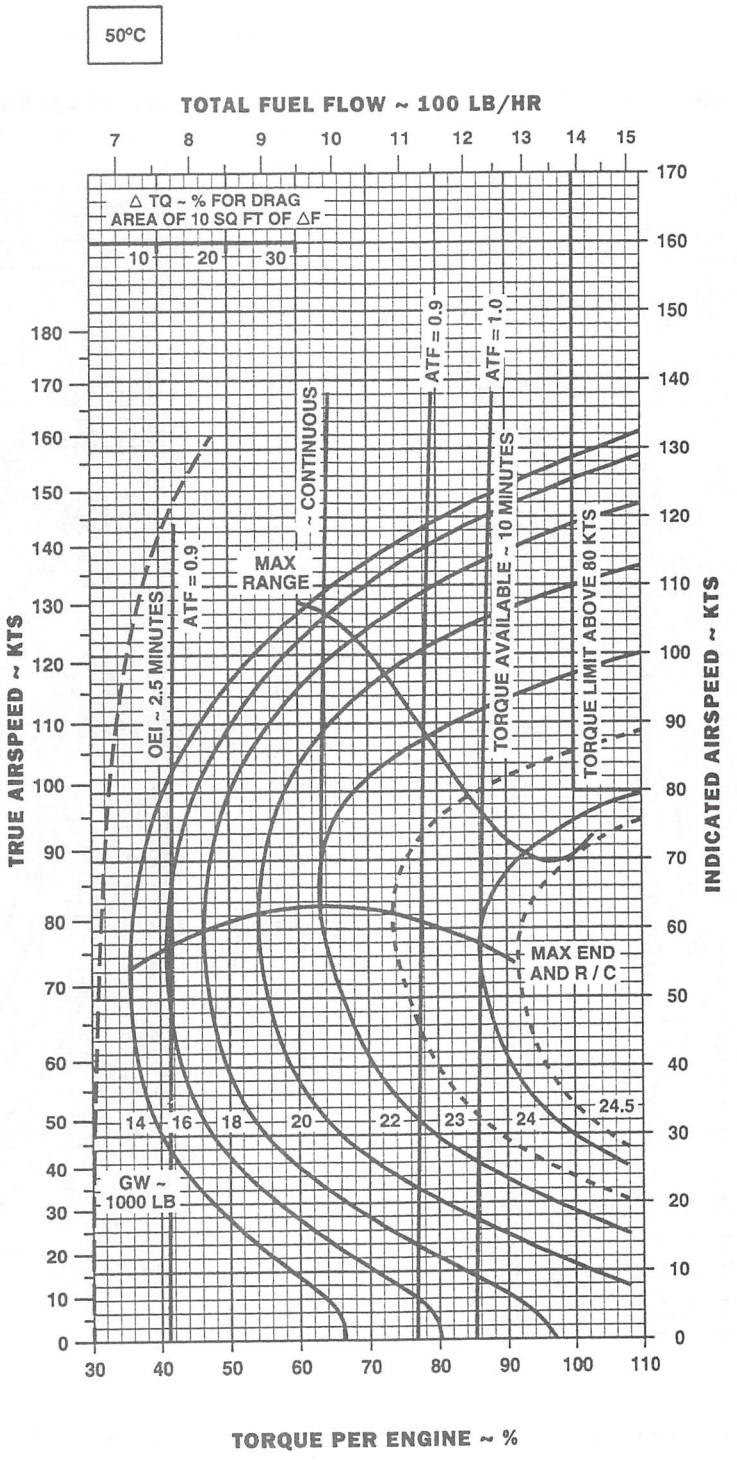

AK0929_6
SA

DATA BASIS: FLIGHT TEST

Figure 7-17. Cruise - Pressure Altitude 6,000 Feet - ETS Installed (Sheet 6 of 6)

CRUISE

CLEAN CONFIGURATION
PRESS ALT: 8000 FT

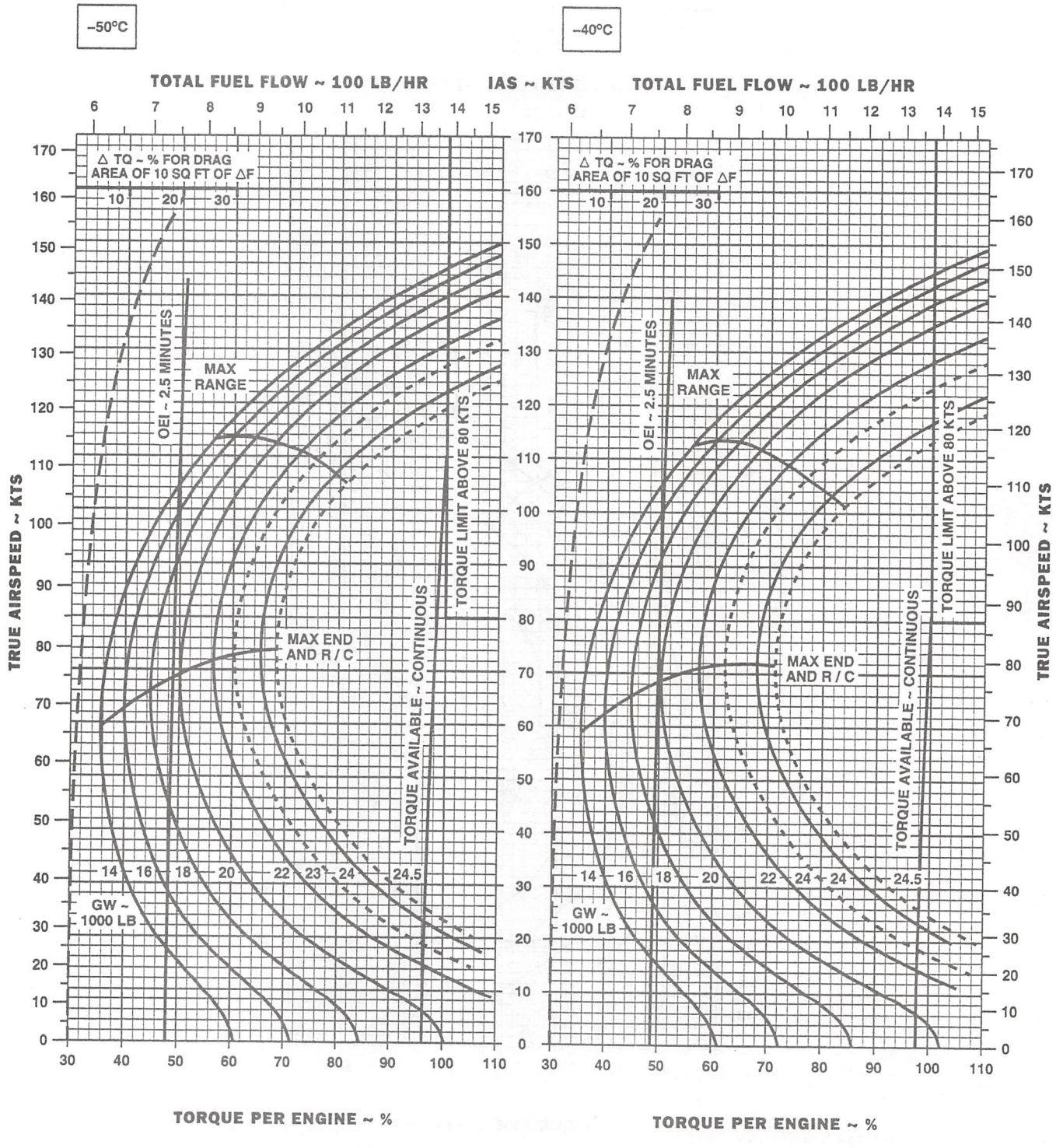

DATA BASIS: FLIGHT TEST

AK0292_1
SA

Figure 7-18. Cruise - Pressure Altitude 8,000 Feet - Clean (Sheet 1 of 5)

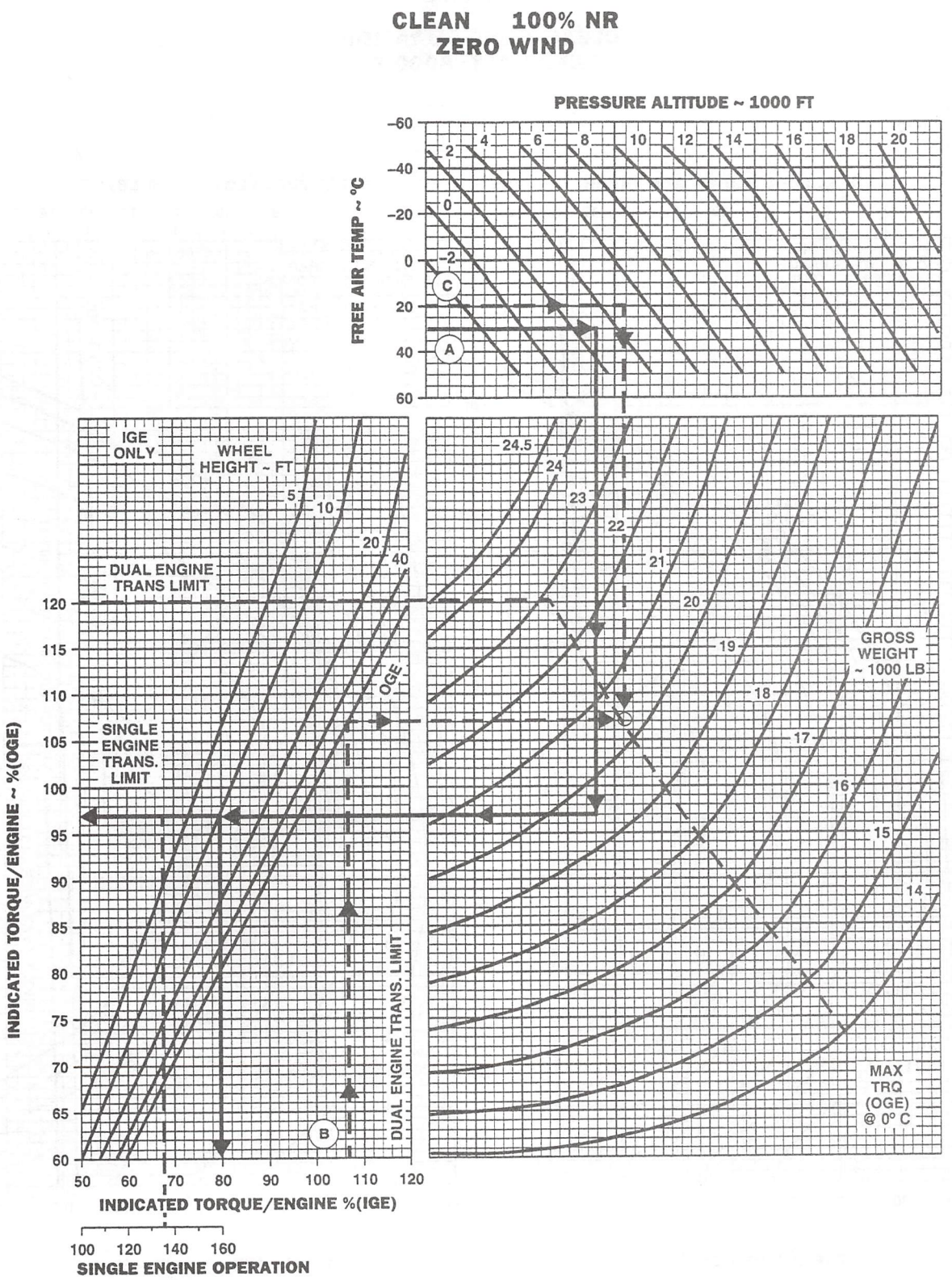

AK0364_1
SA

DATA BASE: FLIGHT TEST

Figure 7-18. Cruise - Pressure Altitude 8,000 Feet - Clean (Sheet 2 of 5)

CRUISE

CLEAN CONFIGURATION
PRESS ALT: 8000 FT

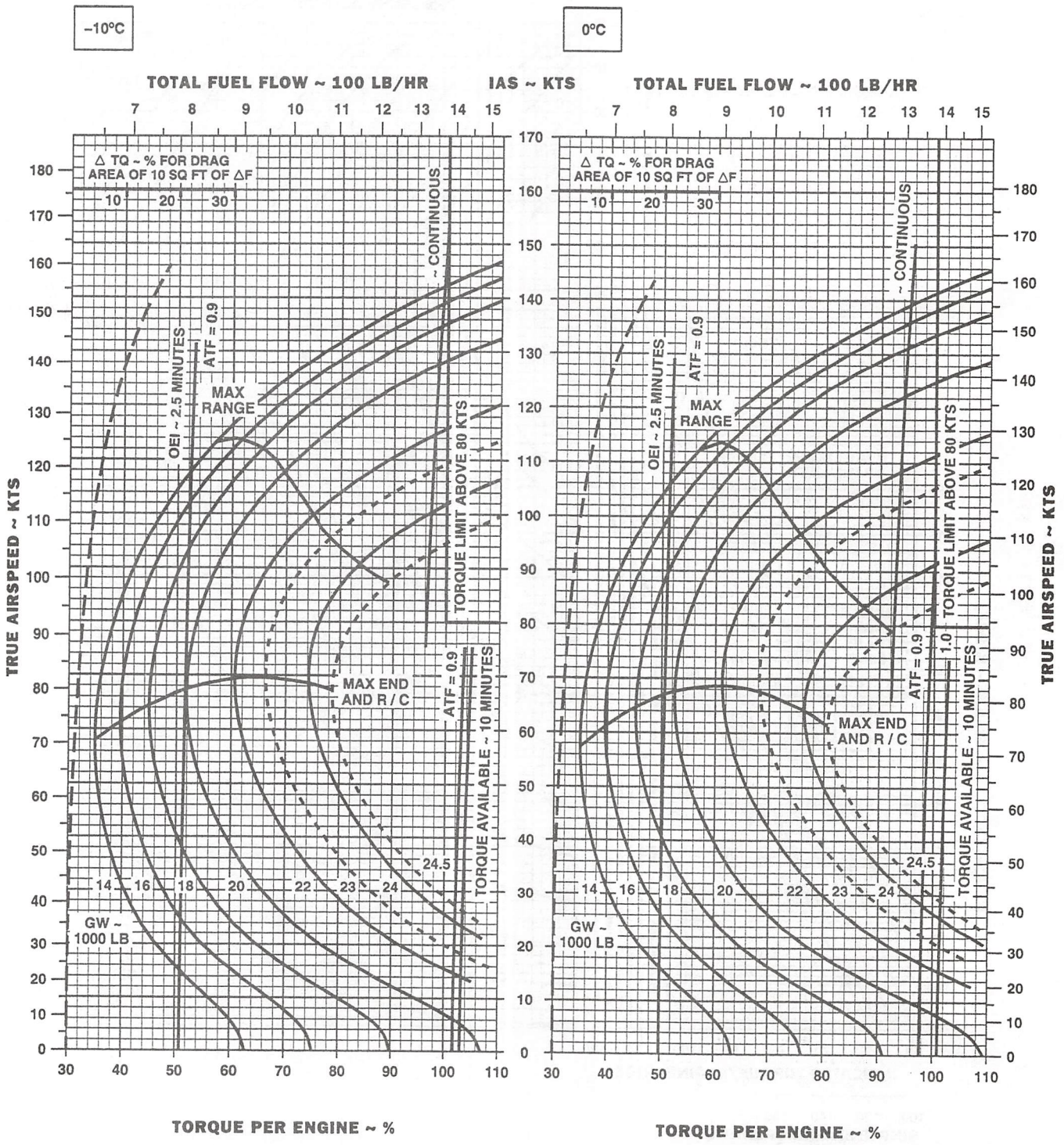

DATA BASIS: FLIGHT TEST

AK0292_3
SA

Figure 7-18. Cruise - Pressure Altitude 8,000 Feet - Clean (Sheet 3 of 5)

CRUISE

CLEAN CONFIGURATION
PRESS ALT: 8000 FT

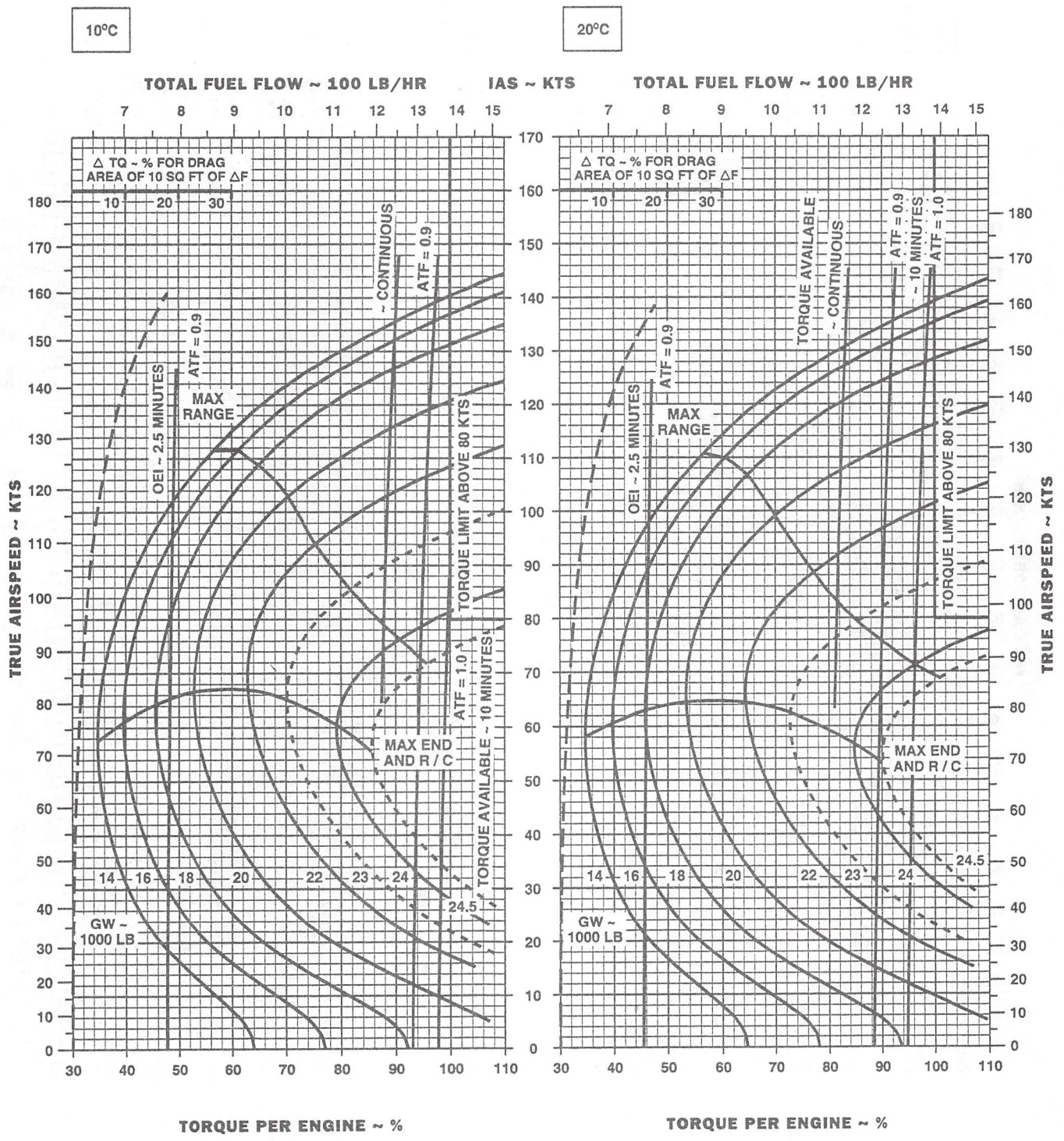

DATA BASE: FLIGHT TEST

AK0292_4
SA

Figure 7-18. Cruise - Pressure Altitude 8,000 Feet - Clean (Sheet 4 of 5)

CRUISE

CLEAN CONFIGURATION
PRESS ALT: 8000 FT

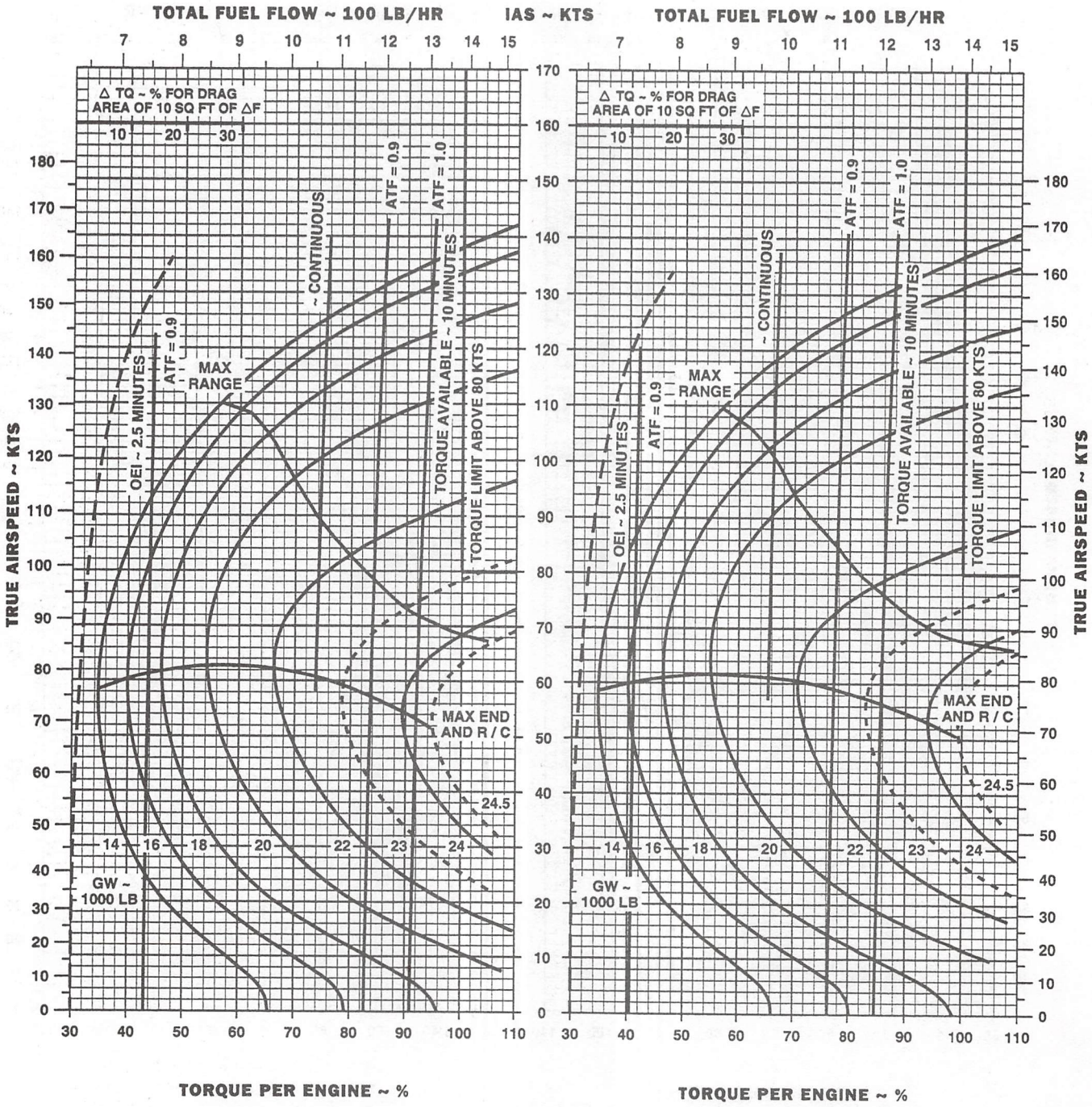

DATA BASIS: FLIGHT TEST

AK0292_5
SA

Figure 7-18. Cruise - Pressure Altitude 8,000 Feet - Clean (Sheet 5 of 5)

CRUISE

ETS INSTALLED
PRESS ALT: 8000 FT

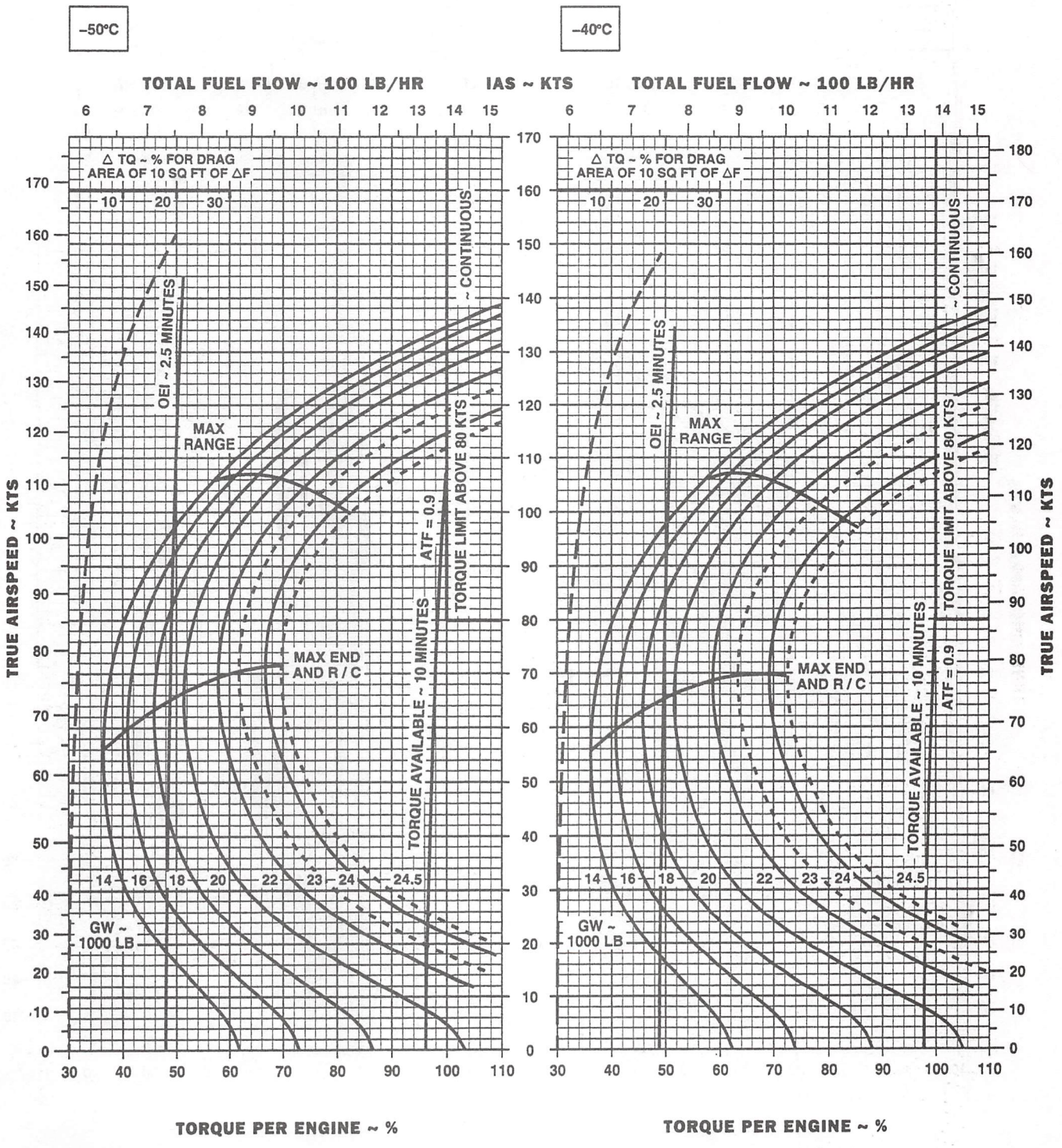

DATA BASE: FLIGHT TEST

AK0930_1 SA

Figure 7-19. Cruise - Pressure Altitude 8,000 Feet - ETS Installed (Sheet 1 of 5)

CRUISE

ETS INSTALLED
PRESS ALT: 8000 FT

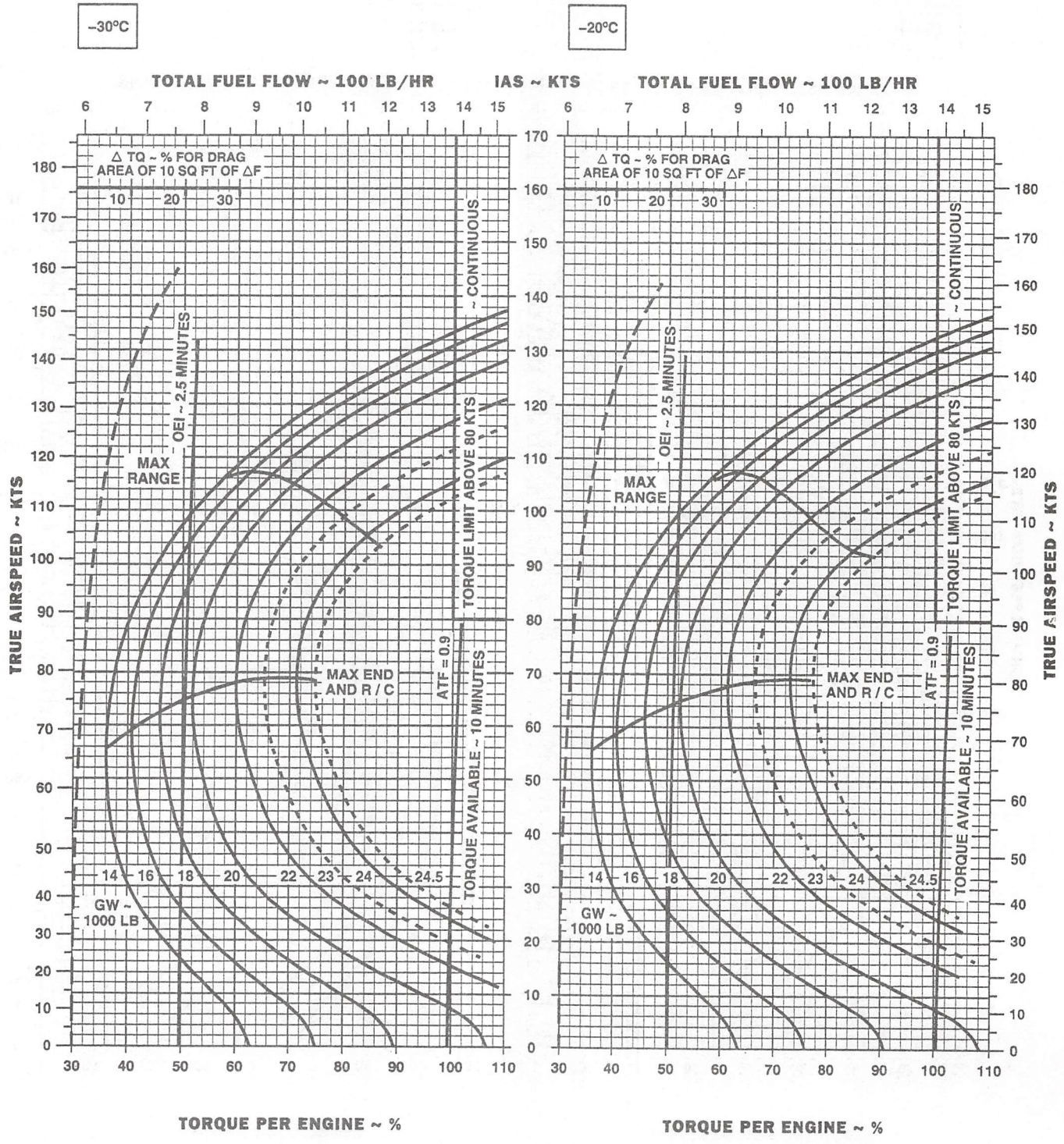

DATA BASIS: FLIGHT TEST

AK0930_2
SA

Figure 7-19. Cruise - Pressure Altitude 8,000 Feet - ETS Installed (Sheet 2 of 5)

CRUISE
ETS INSTALLED
PRESS ALT: 8000 FT

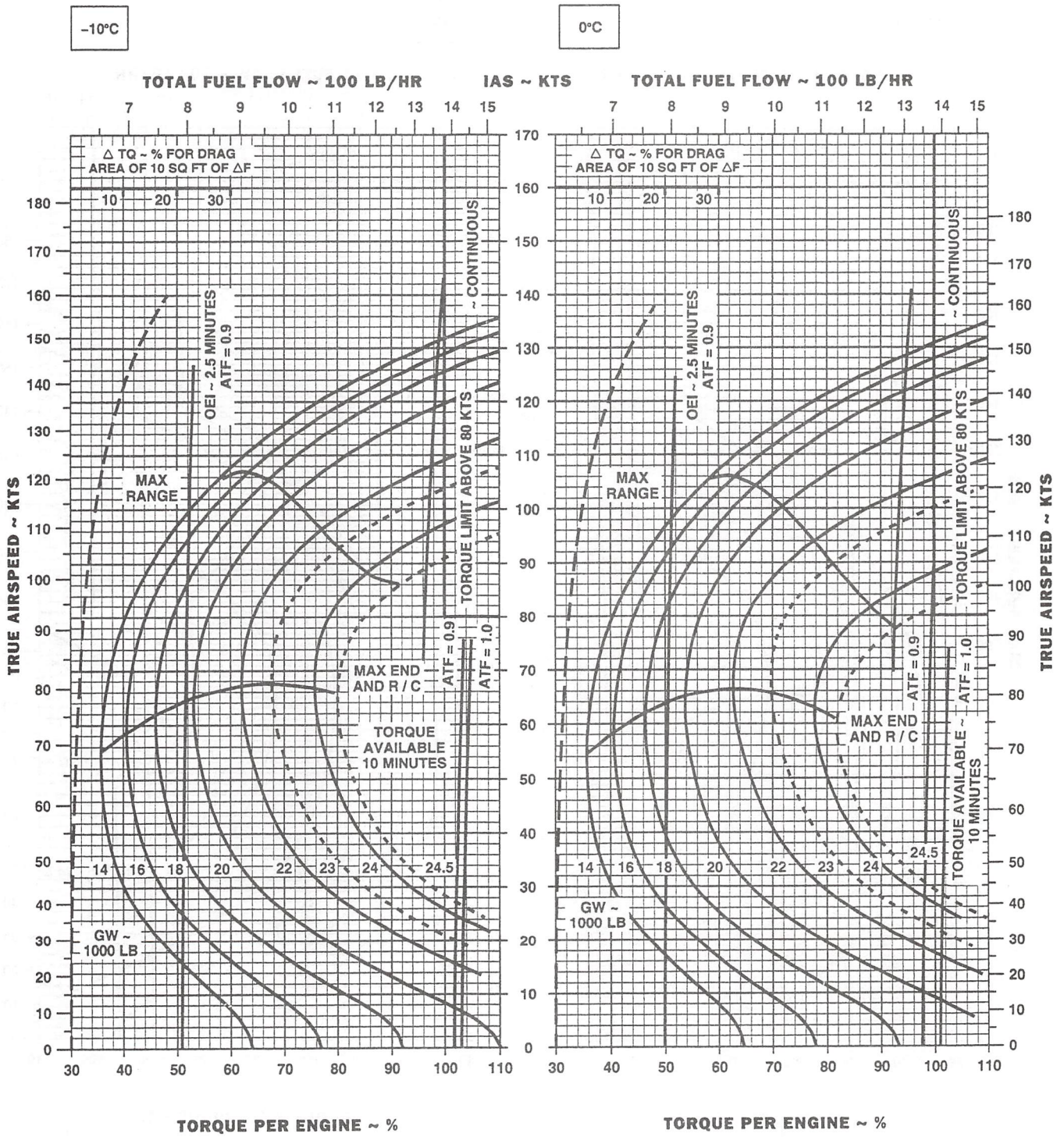

DATA BASE: FLIGHT TEST

AK0930_3
SA

Figure 7-19. Cruise - Pressure Altitude 8,000 Feet - ETS Installed (Sheet 3 of 5)

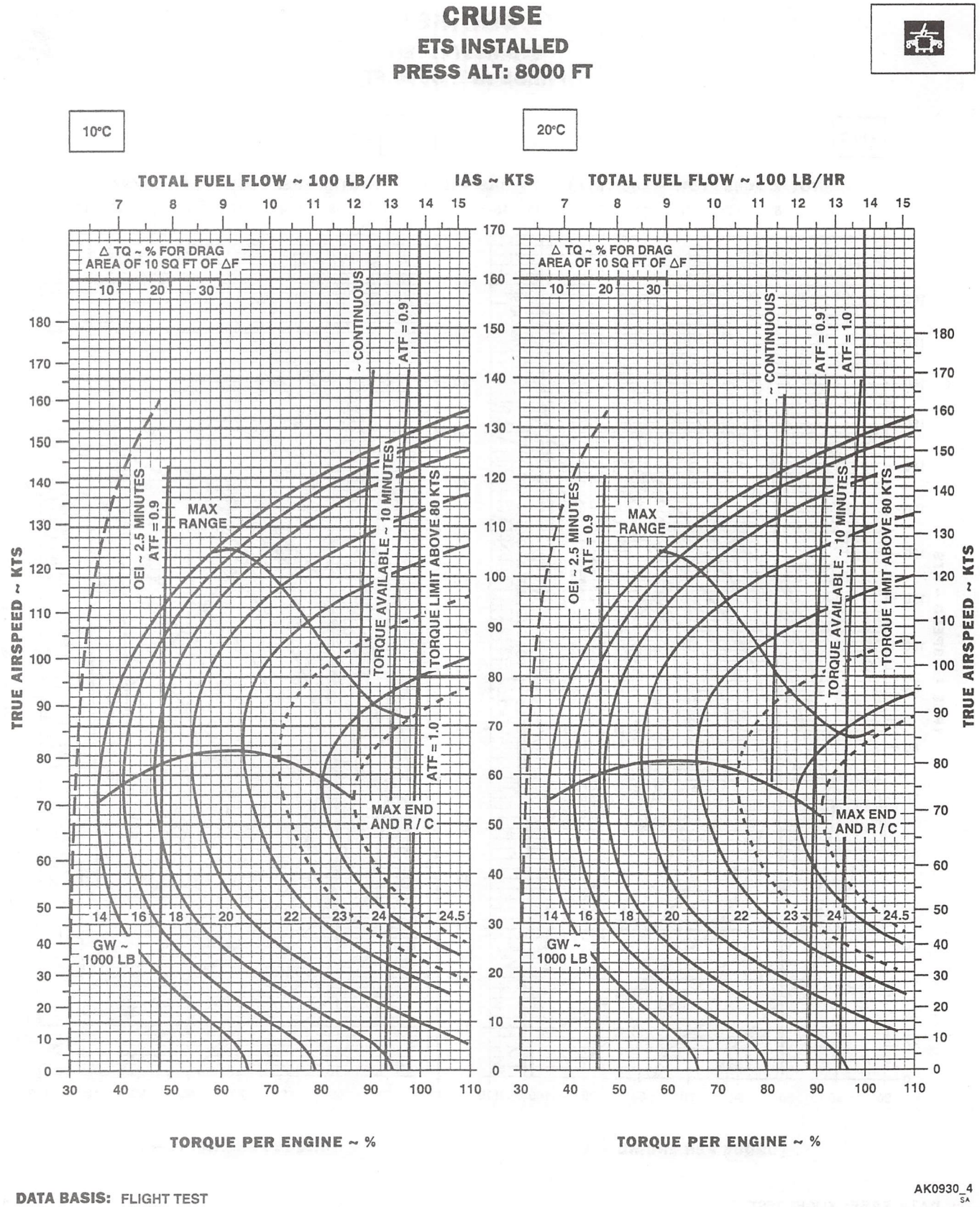

Figure 7-19. Cruise - Pressure Altitude 8,000 Feet - ETS Installed (Sheet 4 of 5)

CRUISE

ETS INSTALLED

PRESS ALT: 8000 FT

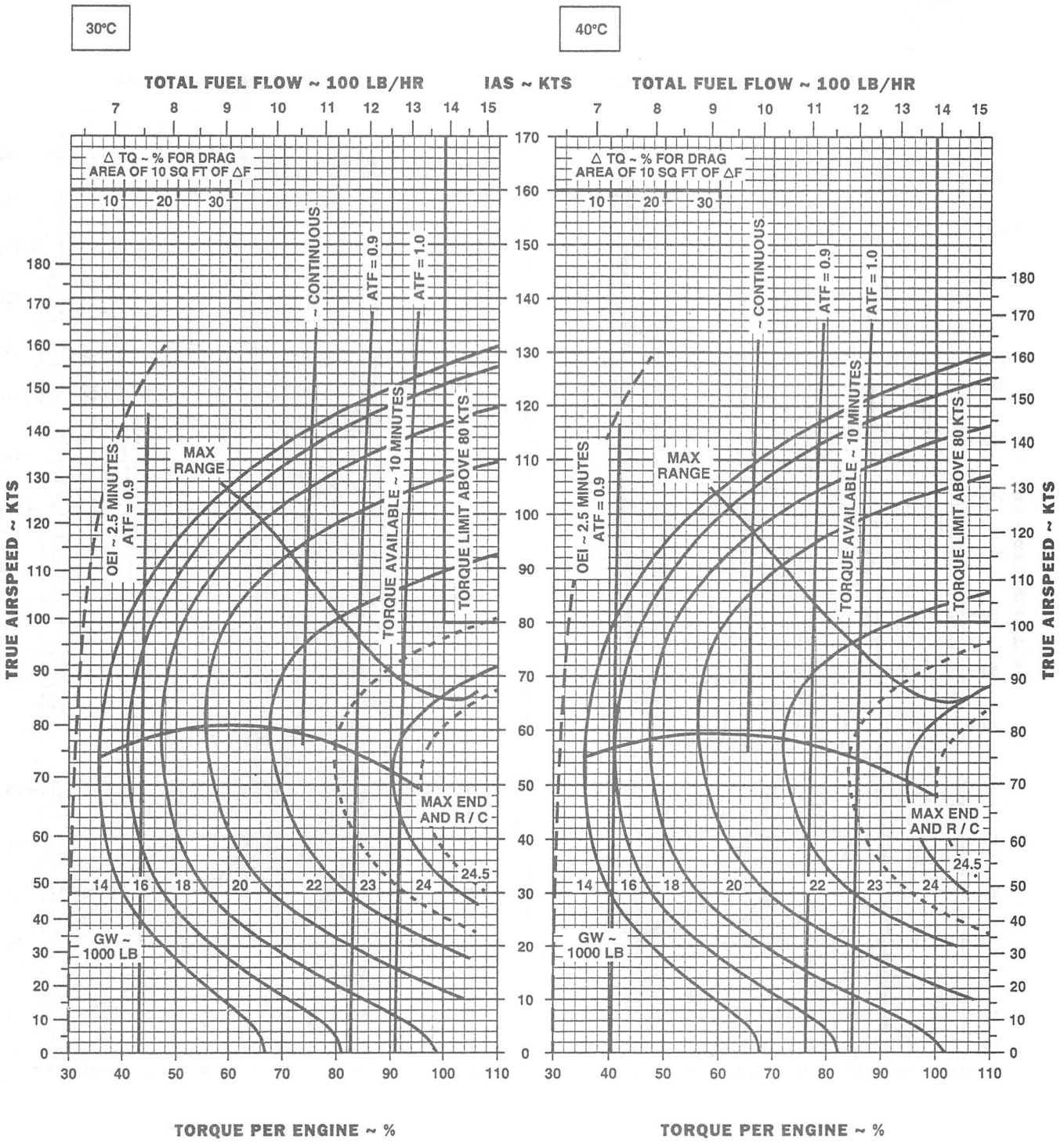

DATA BASE: FLIGHT TEST

AK0930_5 SA

Figure 7-19. Cruise - Pressure Altitude 8,000 Feet - ETS Installed (Sheet 5 of 5)

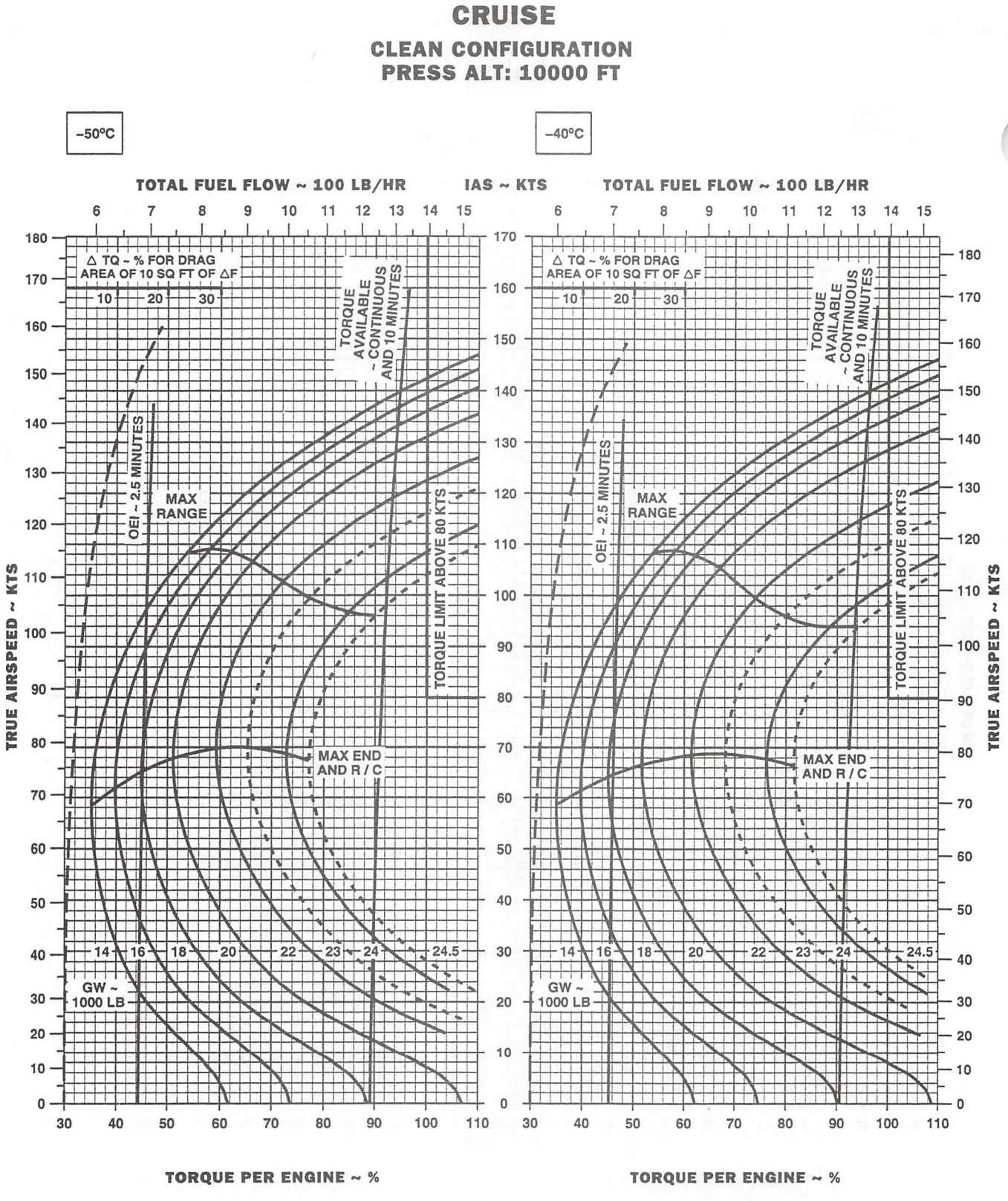

DATA BASIS: FLIGHT TEST

AK0293_1
SA

Figure 7-20. Cruise - Pressure Altitude 10,000 Feet - Clean (Sheet 1 of 5)

CRUISE

CLEAN CONFIGURATION
PRESS ALT: 10000 FT

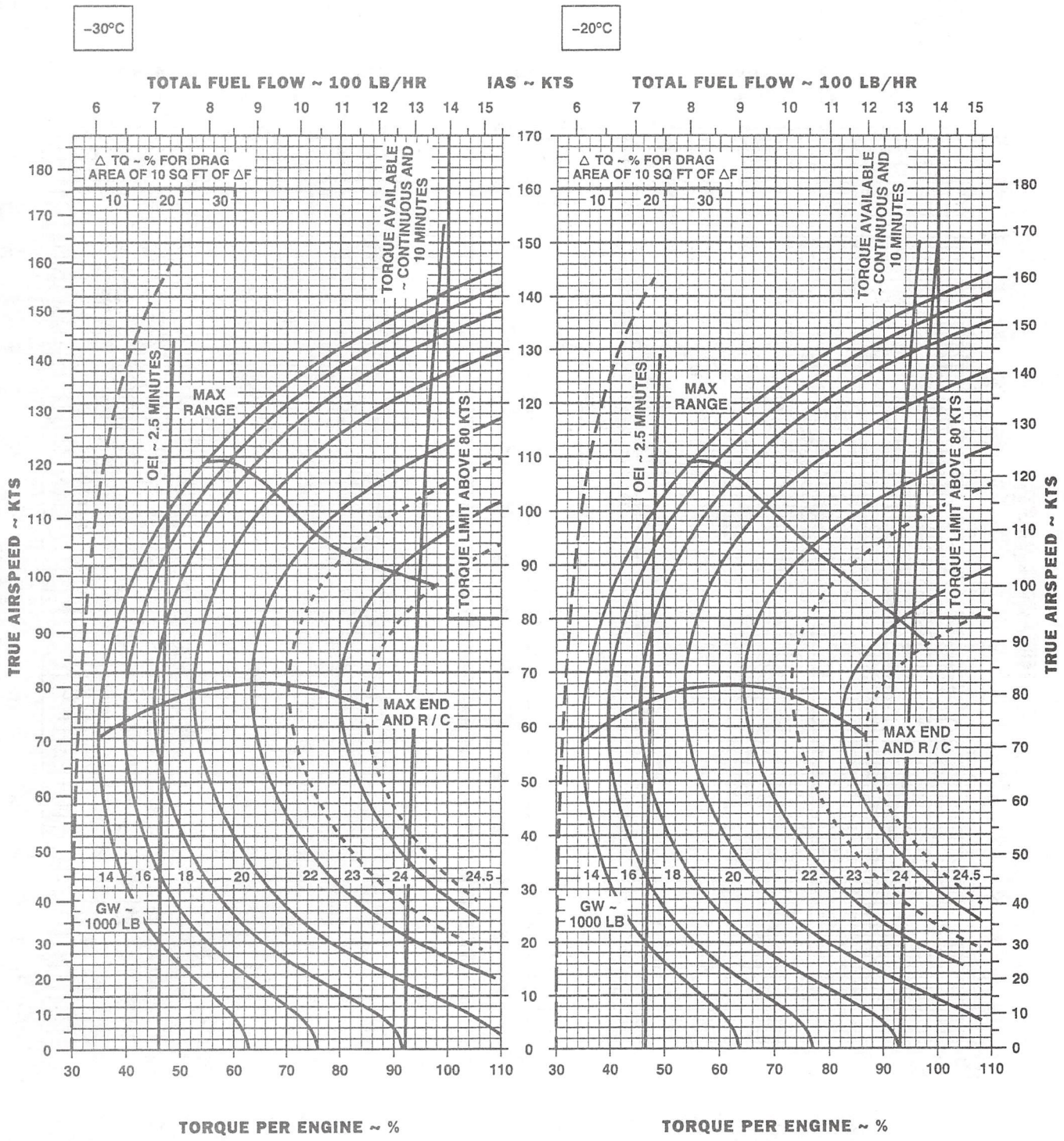

DATA BASE: FLIGHT TEST

AK0293_2
SA

Figure 7-20. Cruise - Pressure Altitude 10,000 Feet - Clean (Sheet 2 of 5)

CRUISE

CLEAN CONFIGURATION
PRESS ALT: 10000 FT

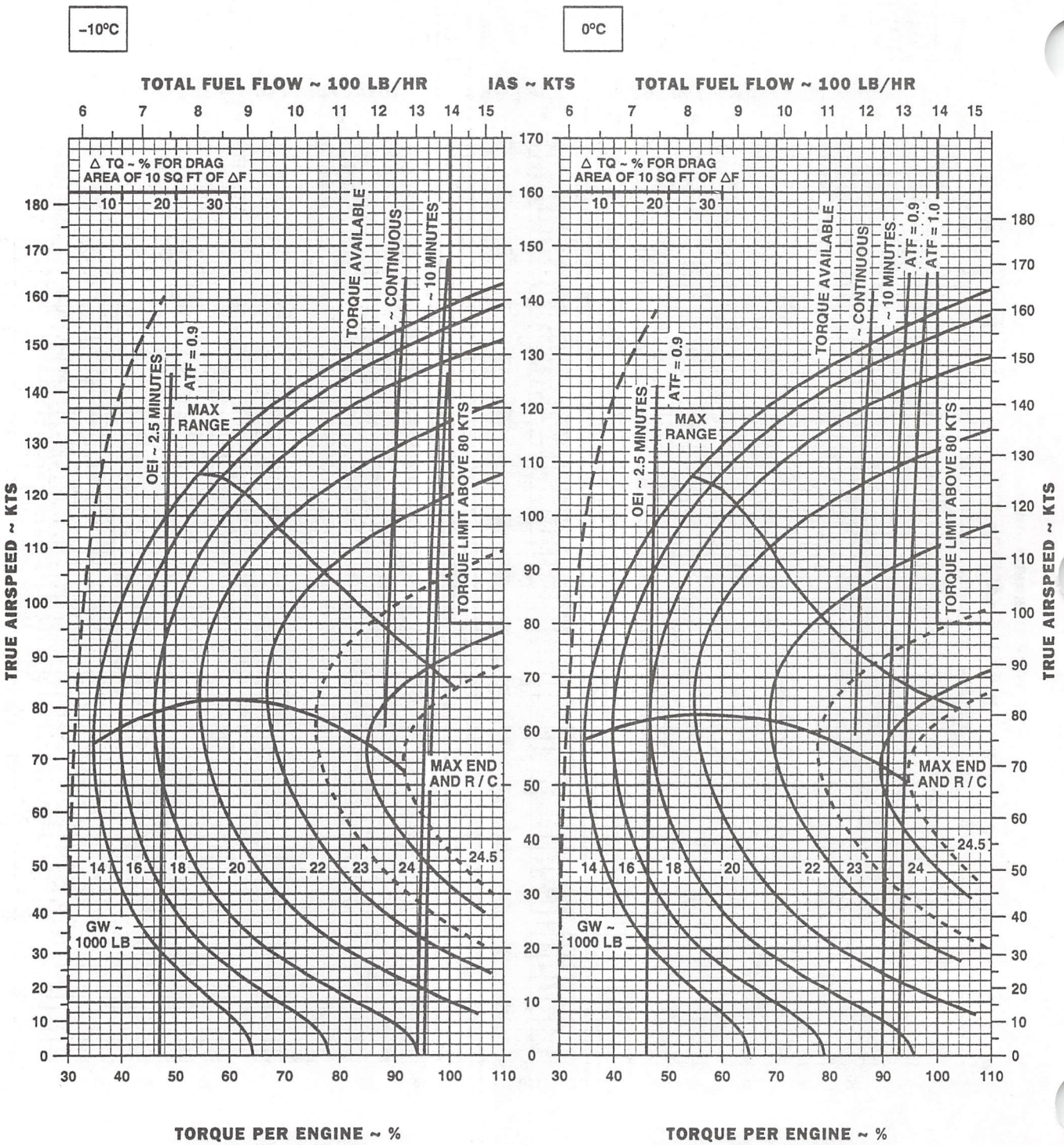

DATA BASIS: FLIGHT TEST

AK0293_3
SA

Figure 7-20. Cruise - Pressure Altitude 10,000 Feet - Clean (Sheet 3 of 5)

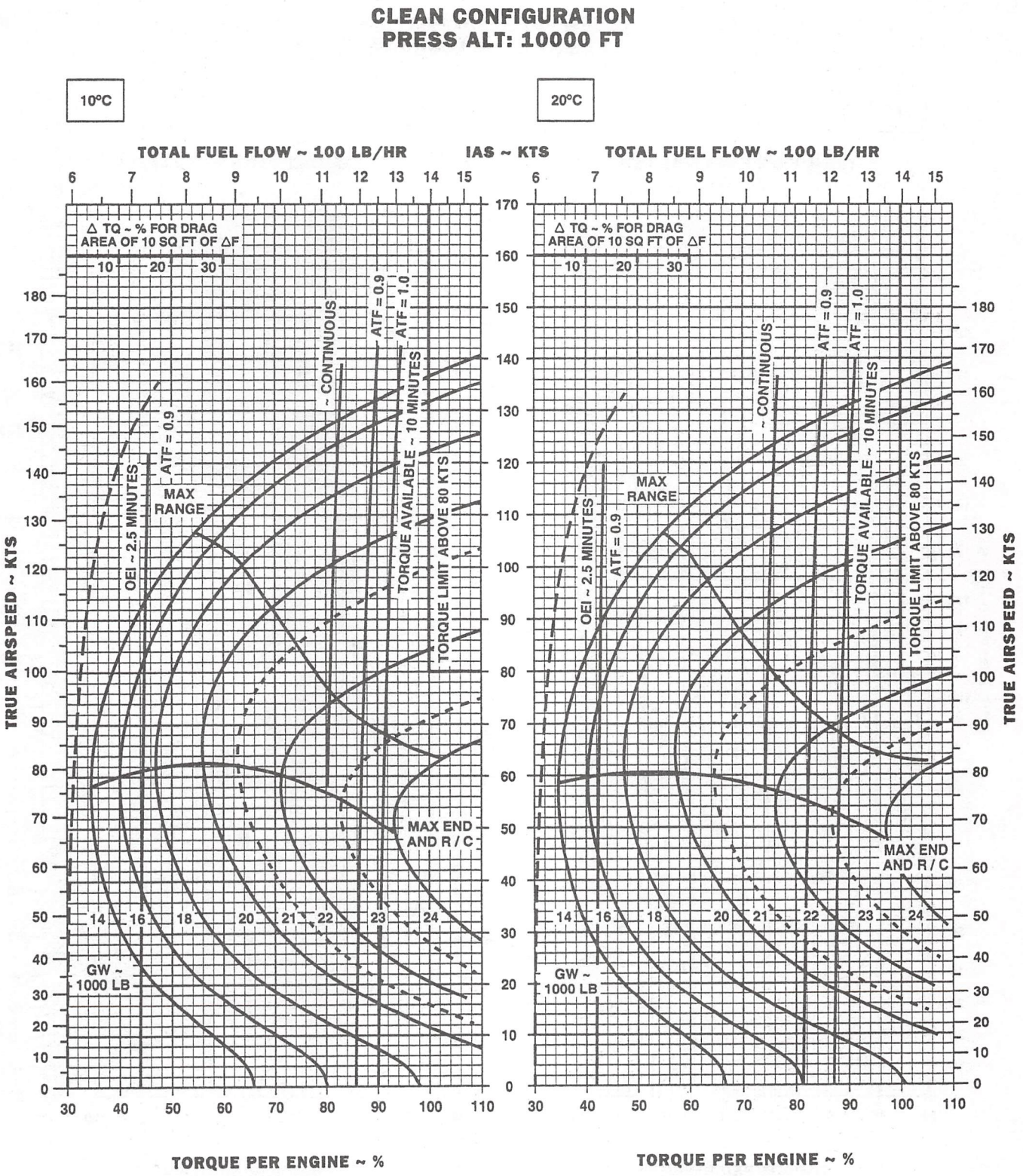

DATA BASE: FLIGHT TEST

AK0293_4
SA

Figure 7-20. Cruise - Pressure Altitude 10,000 Feet - Clean (Sheet 4 of 5)

CRUISE

CLEAN CONFIGURATION
PRESS ALT: 10000 FT

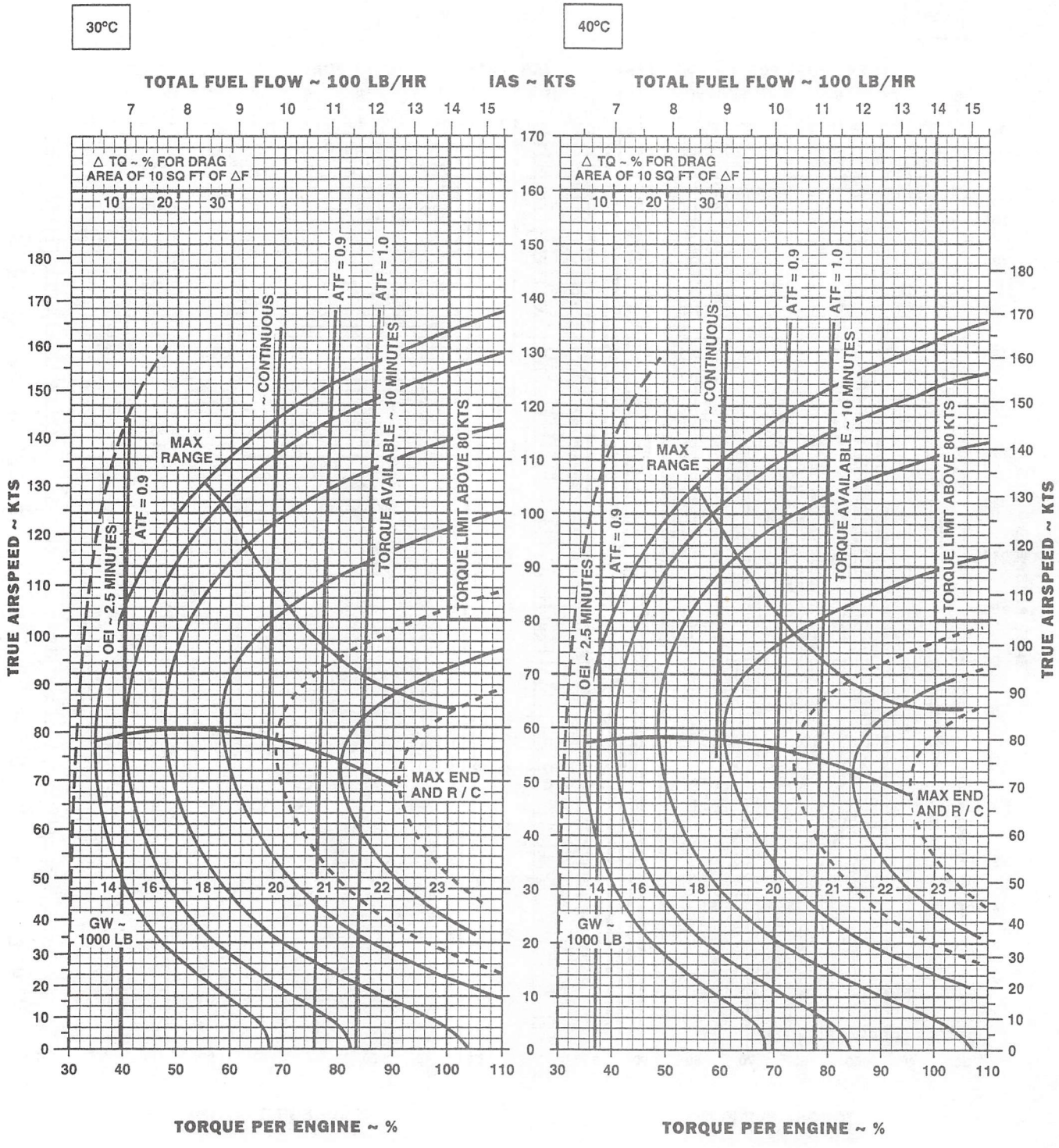

DATA BASIS: FLIGHT TEST

AK0293_5
SA

Figure 7-20. Cruise - Pressure Altitude 10,000 Feet - Clean (Sheet 5 of 5)

CRUISE

ETS INSTALLED

PRESS ALT: 10000 FT

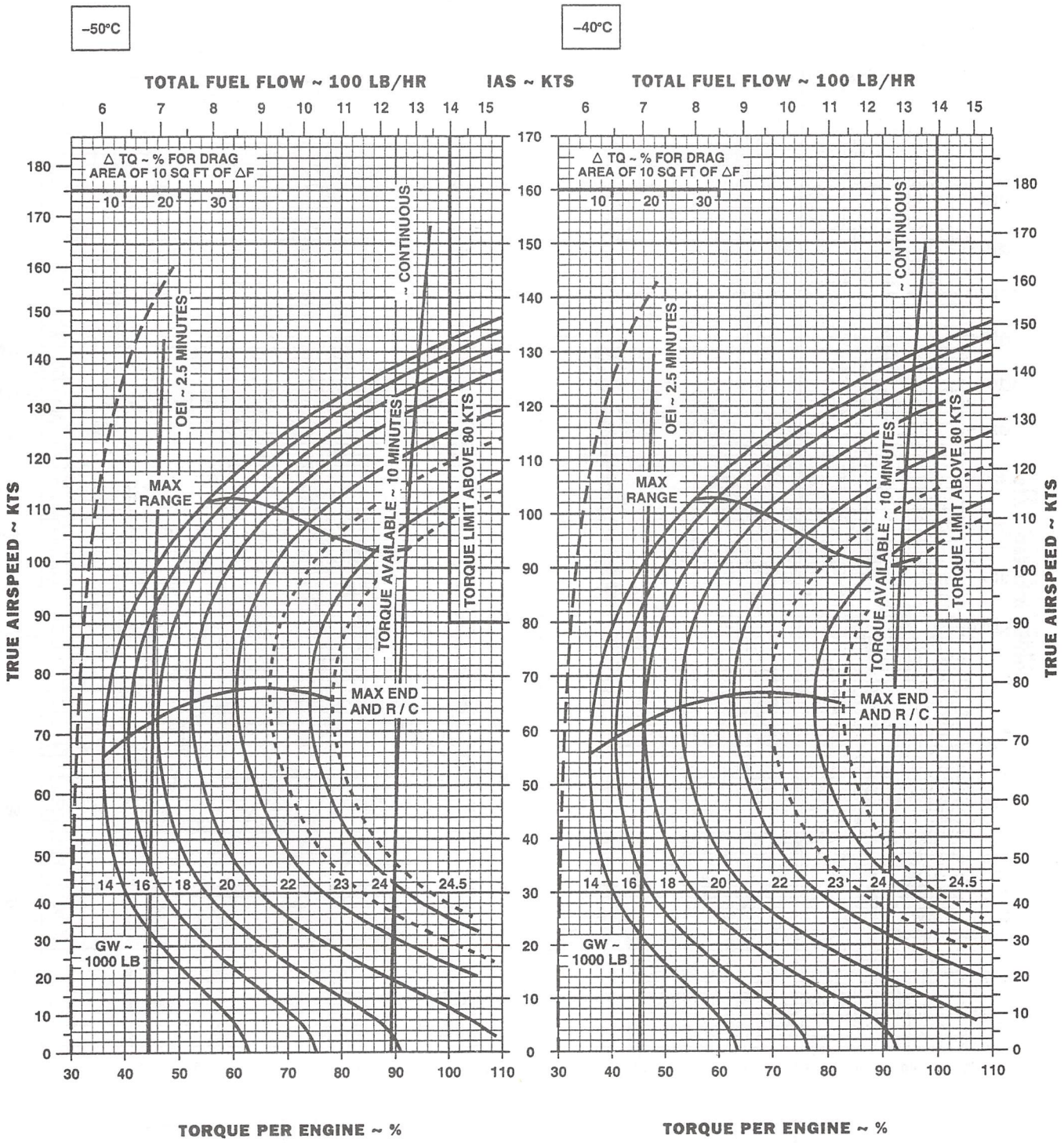

DATA BASE: FLIGHT TEST

AK0931_1
SA

Figure 7-21. Cruise - Pressure Altitude 10,000 Feet - ETS Installed (Sheet 1 of 5)

CRUISE

ETS INSTALLED

PRESS ALT: 10000 FT

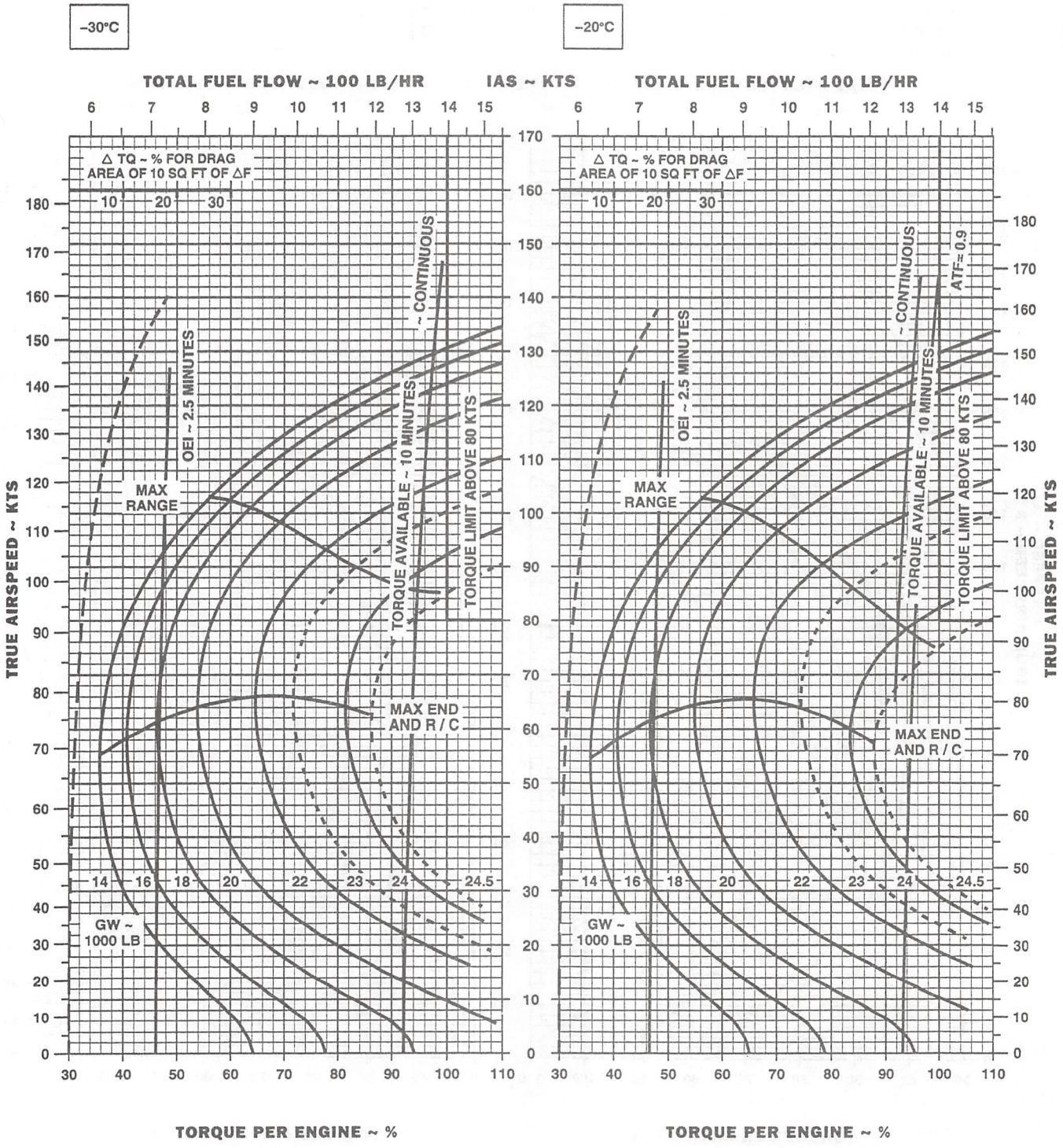

DATA BASIS: FLIGHT TEST

AK0931_2 SA

Figure 7-21. Cruise - Pressure Altitude 10,000 Feet - ETS Installed (Sheet 2 of 5)

CRUISE

ETS INSTALLED

PRESS ALT: 10000 FT

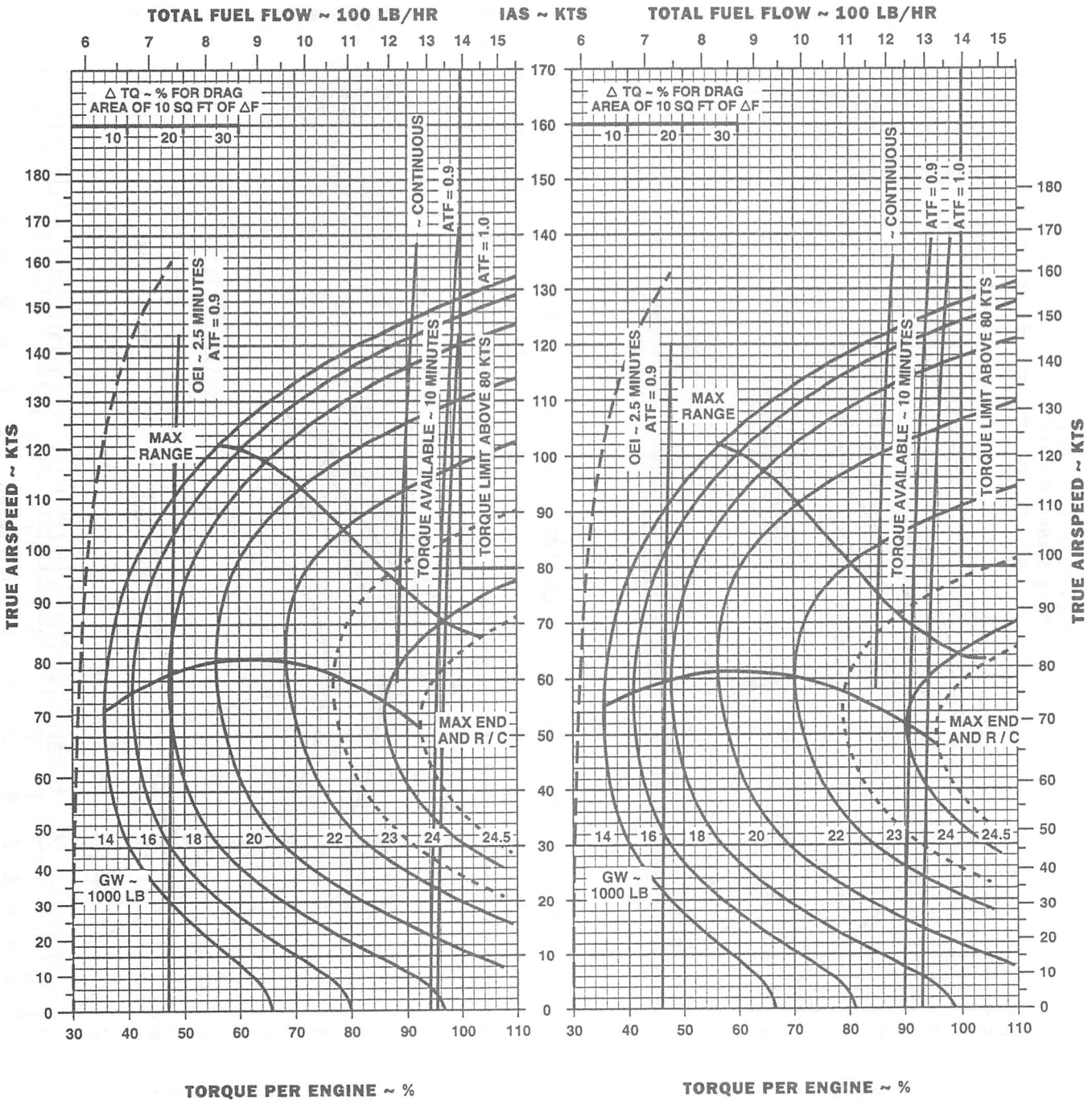

DATA BASE: FLIGHT TEST

AK0931_3 SA

Figure 7-21. Cruise - Pressure Altitude 10,000 Feet - ETS Installed (Sheet 3 of 5)

CRUISE
ETS INSTALLED
PRESS ALT: 10000 FT

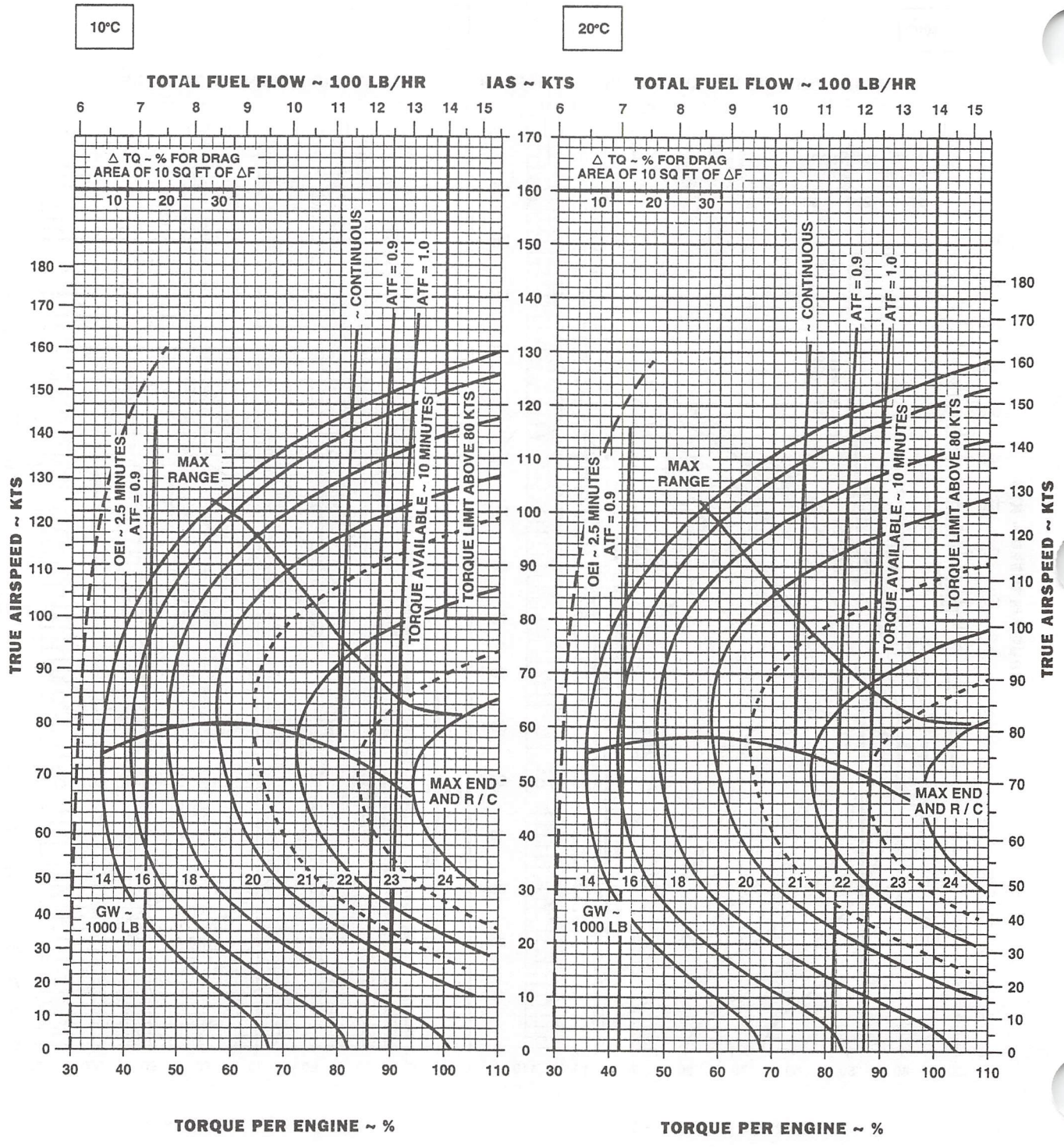

DATA BASIS: FLIGHT TEST

AK0931_4
SA

Figure 7-21. Cruise - Pressure Altitude 10,000 Feet - ETS Installed (Sheet 4 of 5)

CRUISE

ETS INSTALLED

PRESS ALT: 10000 FT

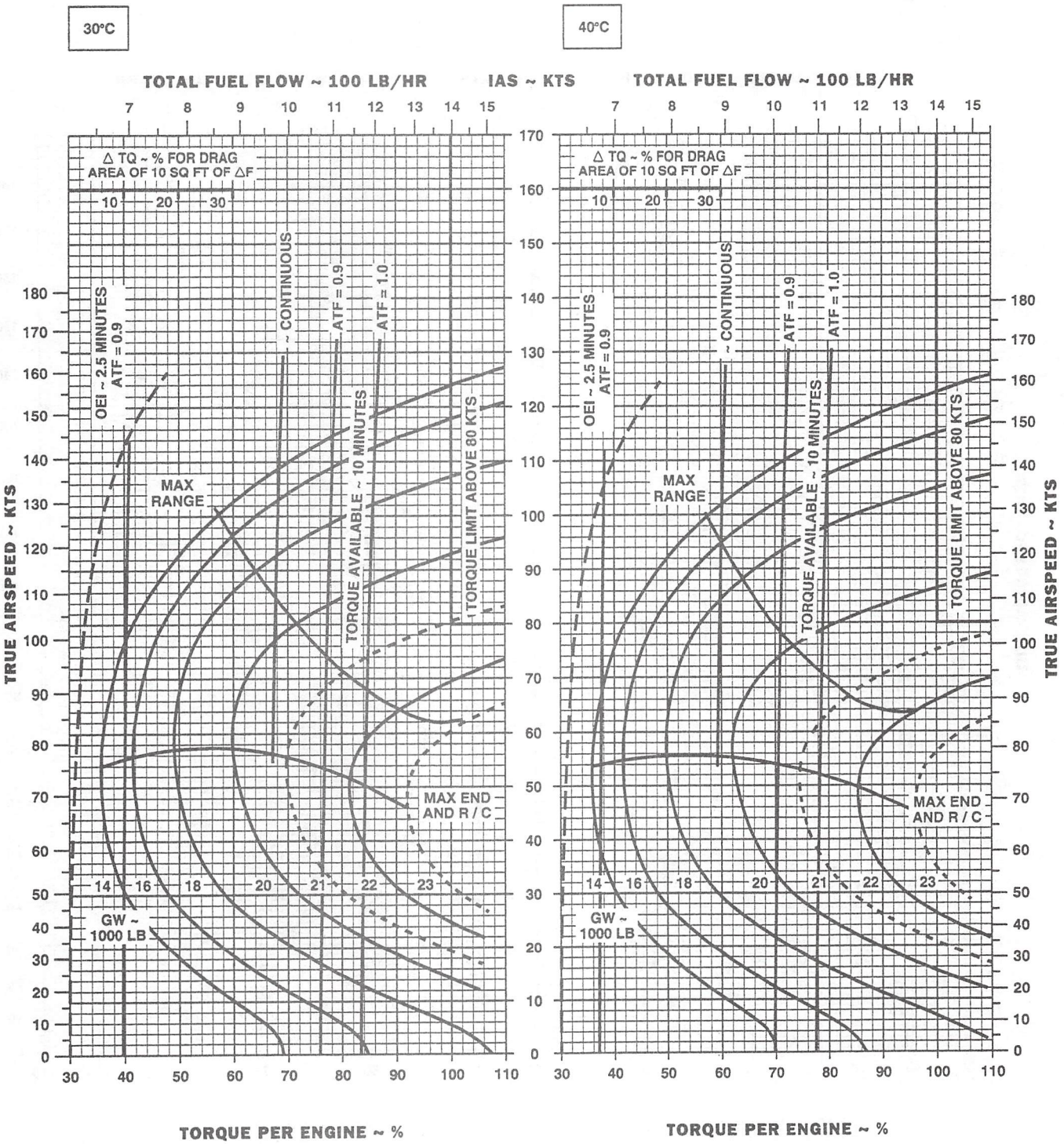

DATA BASE: FLIGHT TEST

AK0931_5
SA

Figure 7-21. Cruise - Pressure Altitude 10,000 Feet - ETS Installed (Sheet 5 of 5)

CRUISE

CLEAN CONFIGURATION
PRESS ALT: 12000 FT

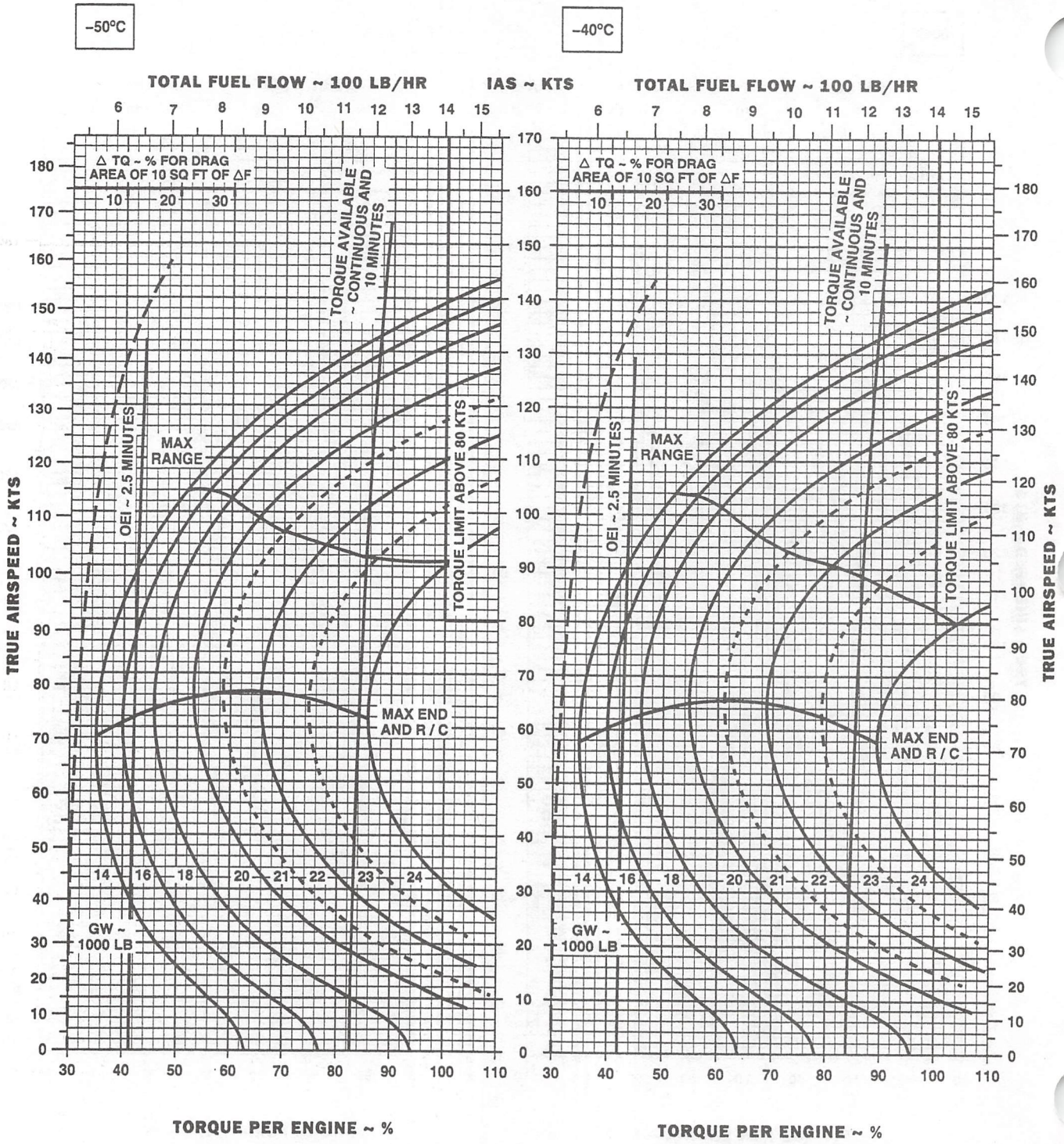

DATA BASIS: FLIGHT TEST

AK0294_1
SA

Figure 7-22. Cruise - Pressure Altitude 12,000 Feet - Clean (Sheet 1 of 5)

CRUISE

CLEAN CONFIGURATION
PRESS ALT: 12000 FT

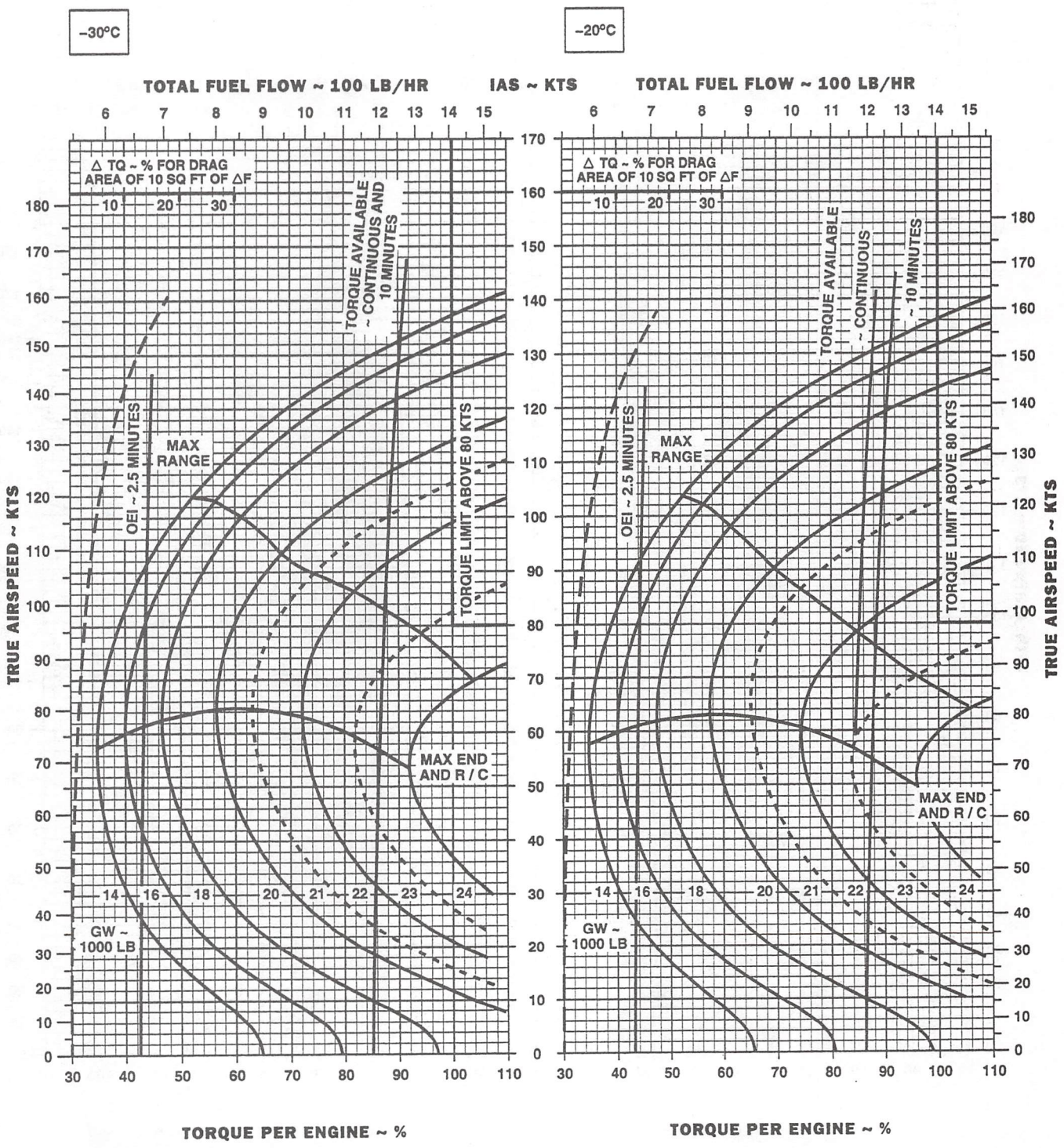

DATA BASE: FLIGHT TEST

AK0294_2 SA

Figure 7-22. Cruise - Pressure Altitude 12,000 Feet - Clean (Sheet 2 of 5)

CRUISE

CLEAN CONFIGURATION
PRESS ALT: 12000 FT

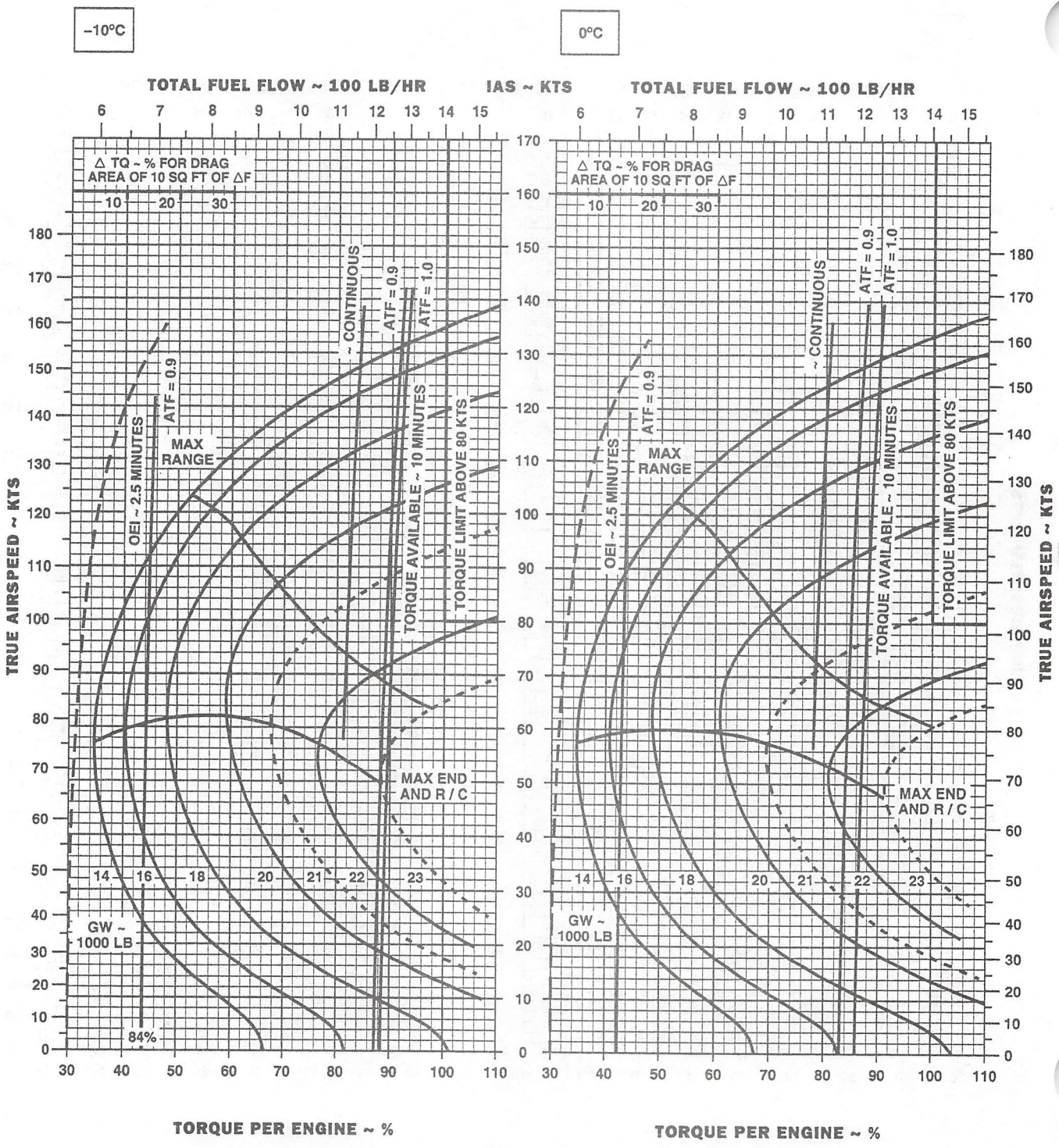

DATA BASIS: FLIGHT TEST

AK0294_3
SA

Figure 7-22. Cruise - Pressure Altitude 12,000 Feet - Clean (Sheet 3 of 5)

CRUISE

CLEAN CONFIGURATION
PRESS ALT: 12000 FT

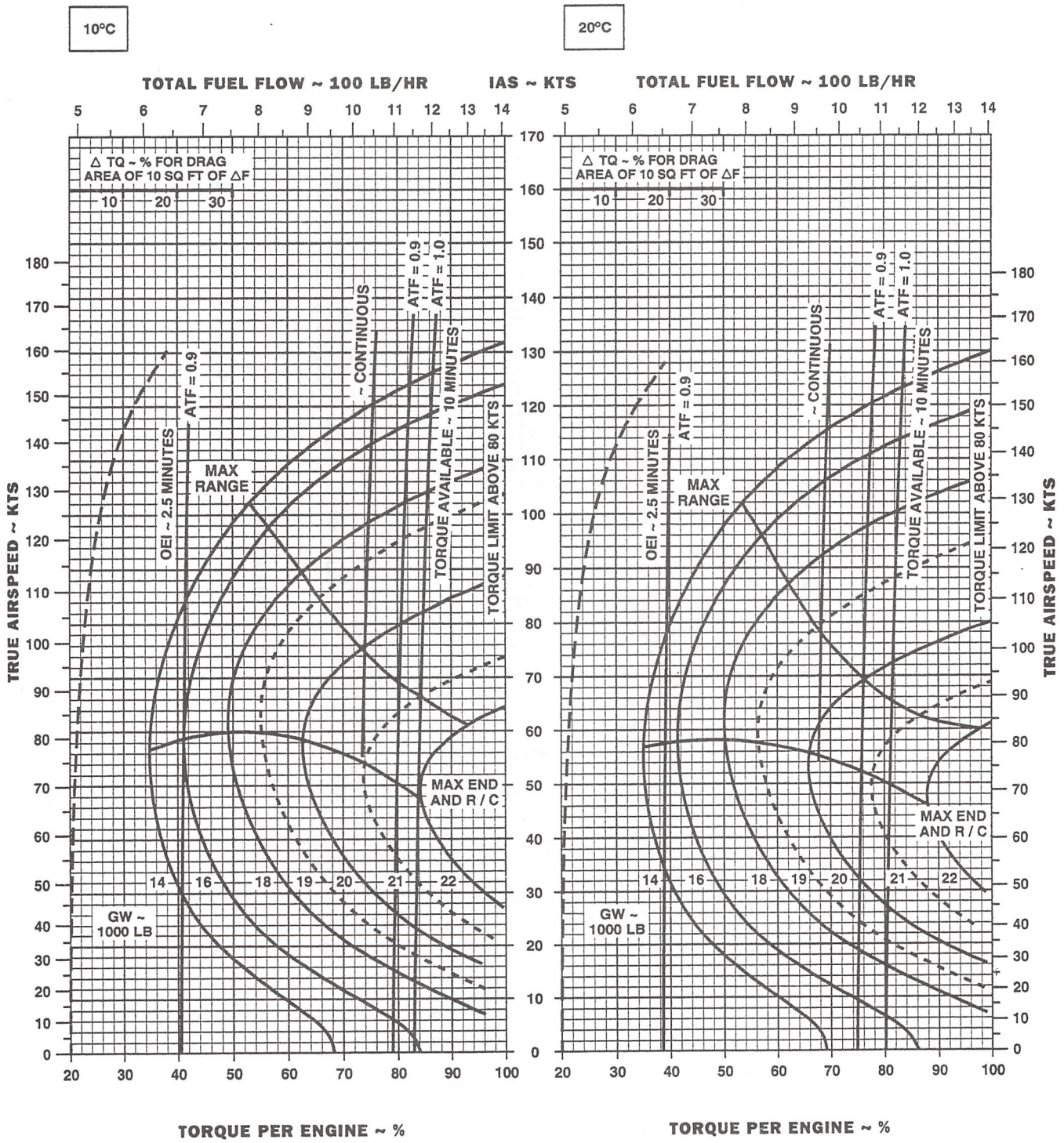

DATA BASIS: FLIGHT TEST

AK0294_4
SA

Figure 7-22. Cruise - Pressure Altitude 12,000 Feet - Clean (Sheet 4 of 5)

CRUISE

CLEAN CONFIGURATION
PRESS ALT: 12000 FT

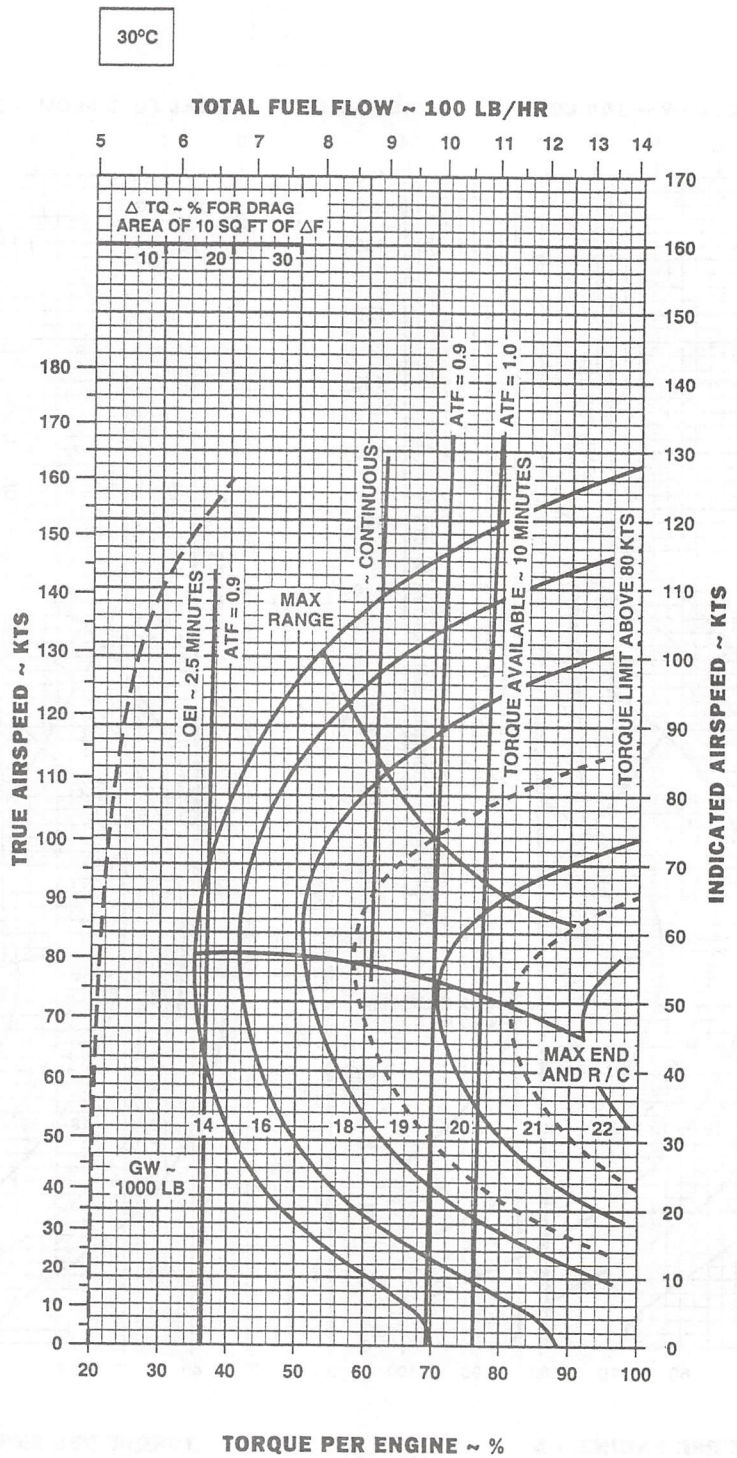

DATA BASIS: FLIGHT TEST

AK0294_5
SA

Figure 7-22. Cruise - Pressure Altitude 12,000 Feet - Clean (Sheet 5 of 5)

CRUISE

ETS INSTALLED

PRESS ALT: 12000 FT

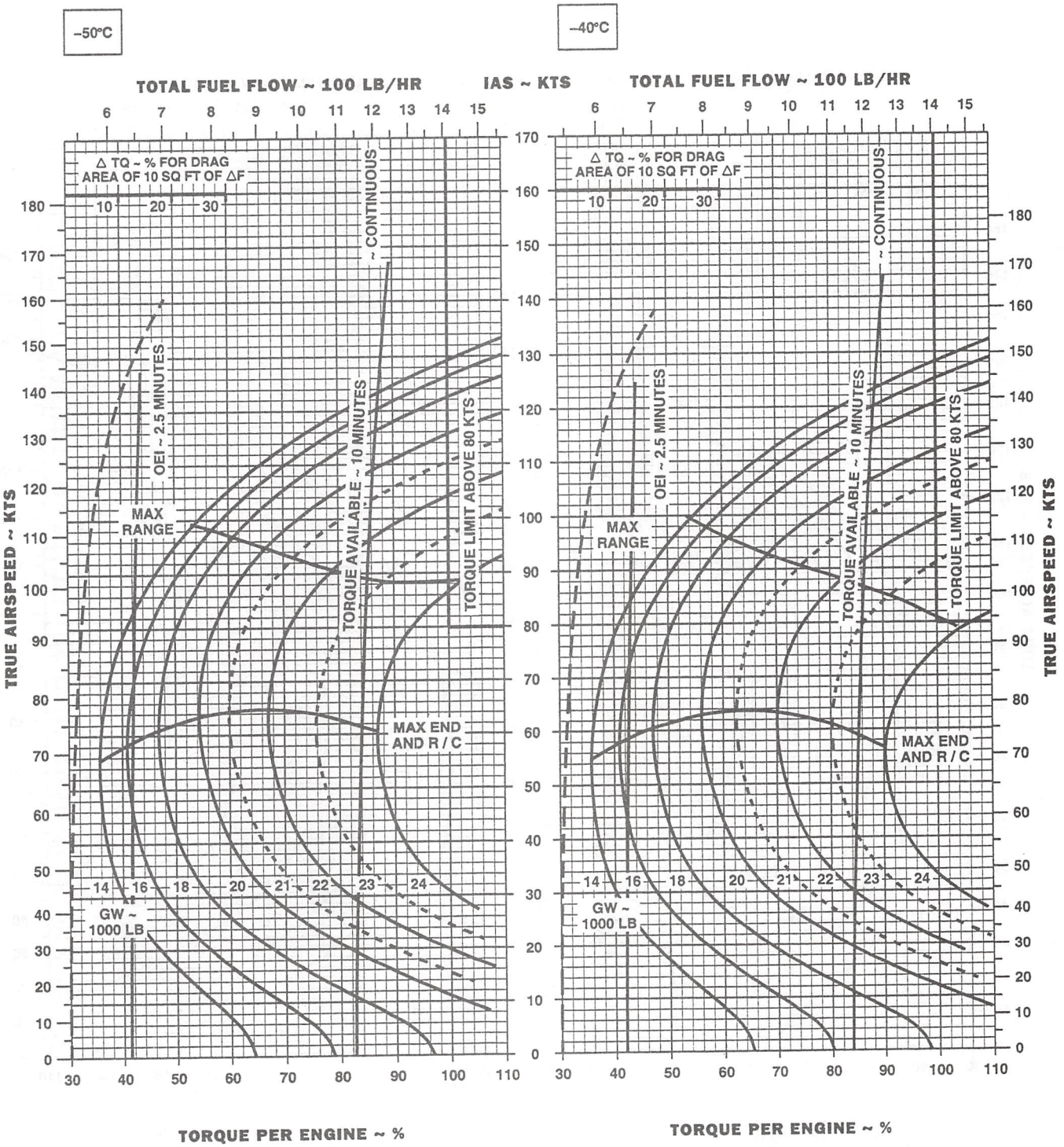

DATA BASE: FLIGHT TEST

Figure 7-23. Cruise - Pressure Altitude 12,000 Feet - ETS Installed (Sheet 1 of 5)

CRUISE

ETS INSTALLED

PRESS ALT: 12000 FT

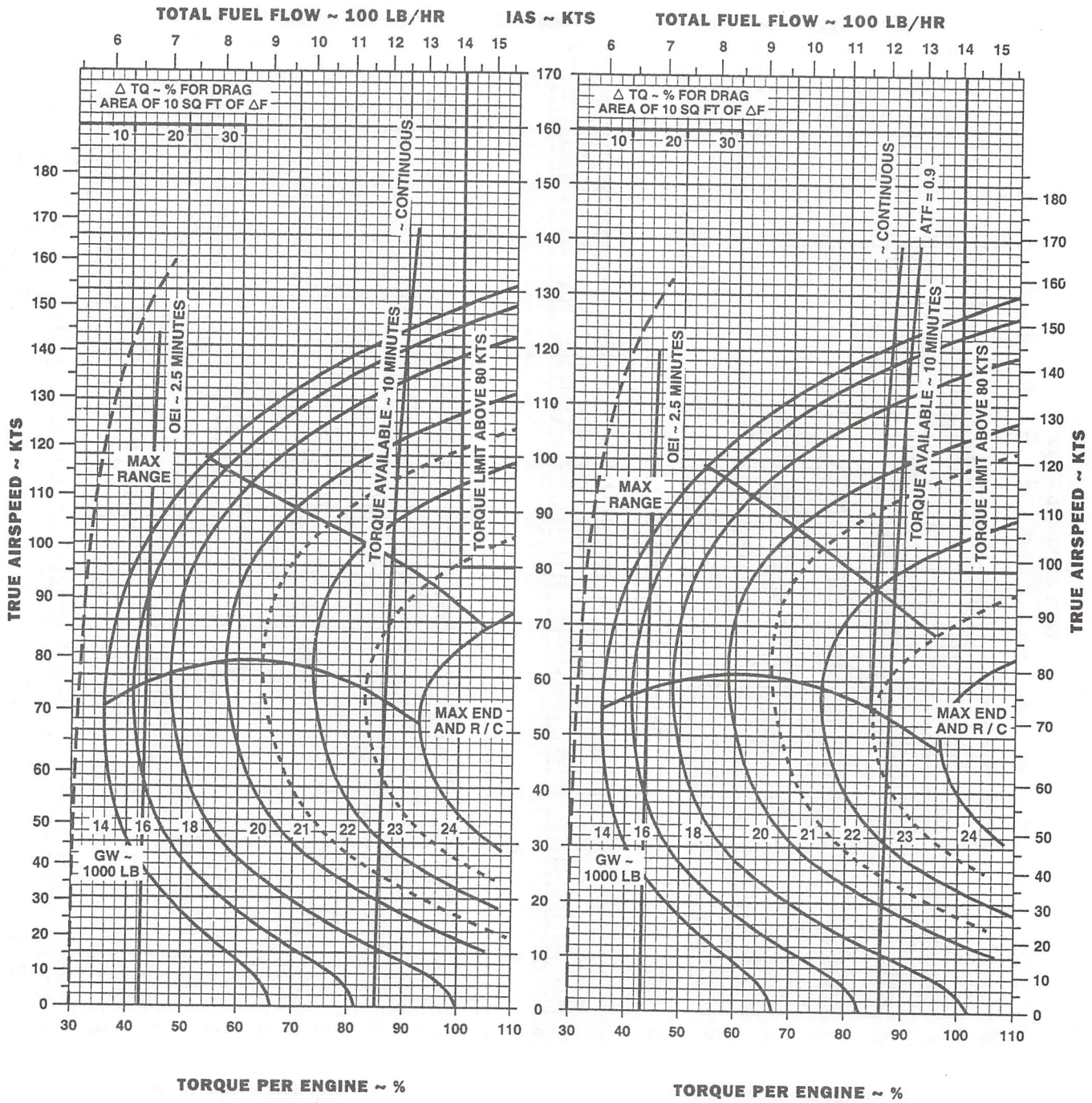

DATA BASIS: FLIGHT TEST

AK0932_2
SA

Figure 7-23. Cruise - Pressure Altitude 12,000 Feet - ETS Installed (Sheet 2 of 5)

CRUISE

ETS INSTALLED

PRESS ALT: 12000 FT

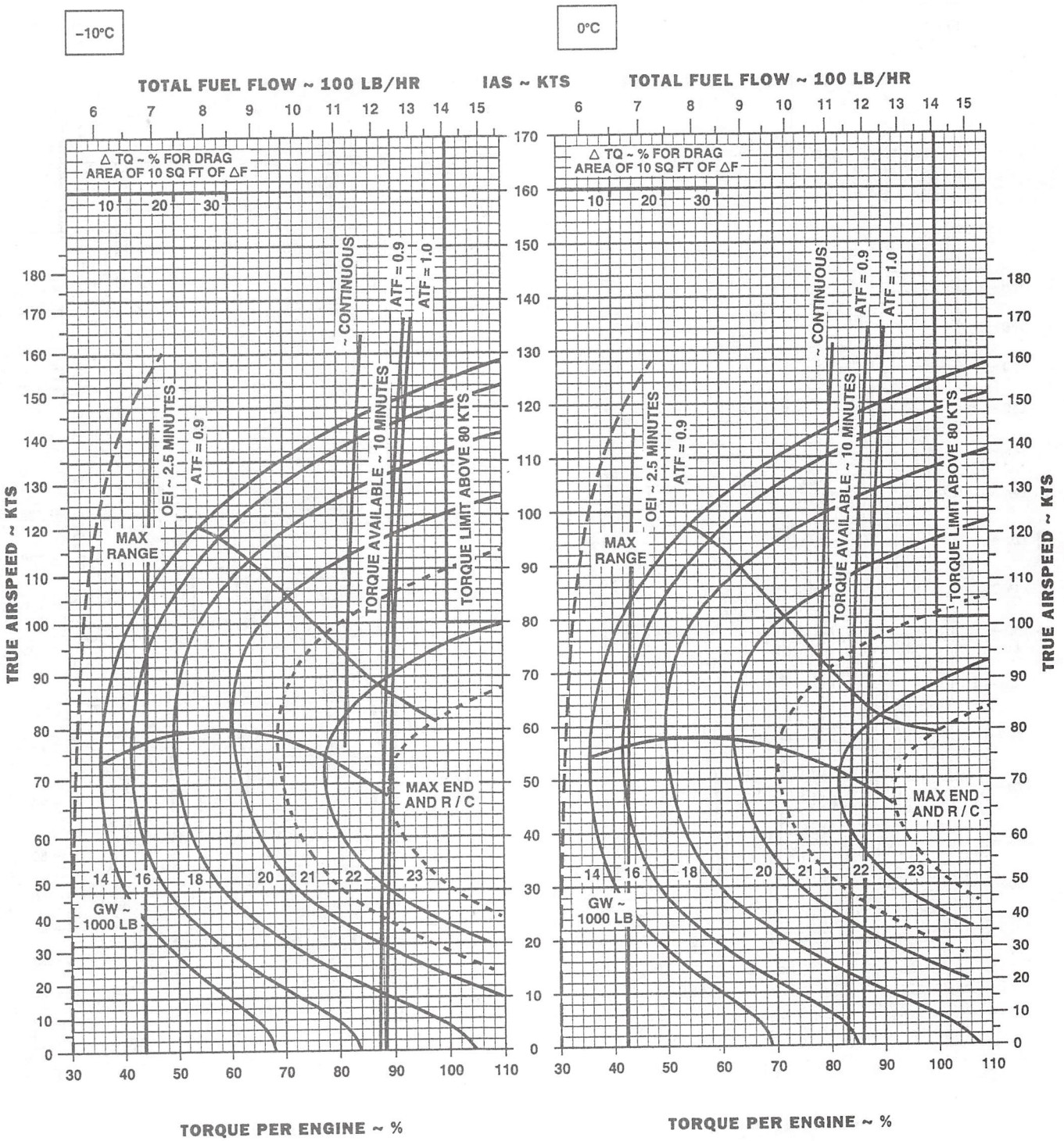

DATA BASE: FLIGHT TEST

Figure 7-23. Cruise - Pressure Altitude 12,000 Feet - ETS Installed (Sheet 3 of 5)

CRUISE
ETS INSTALLED
PRESS ALT: 12000 FT

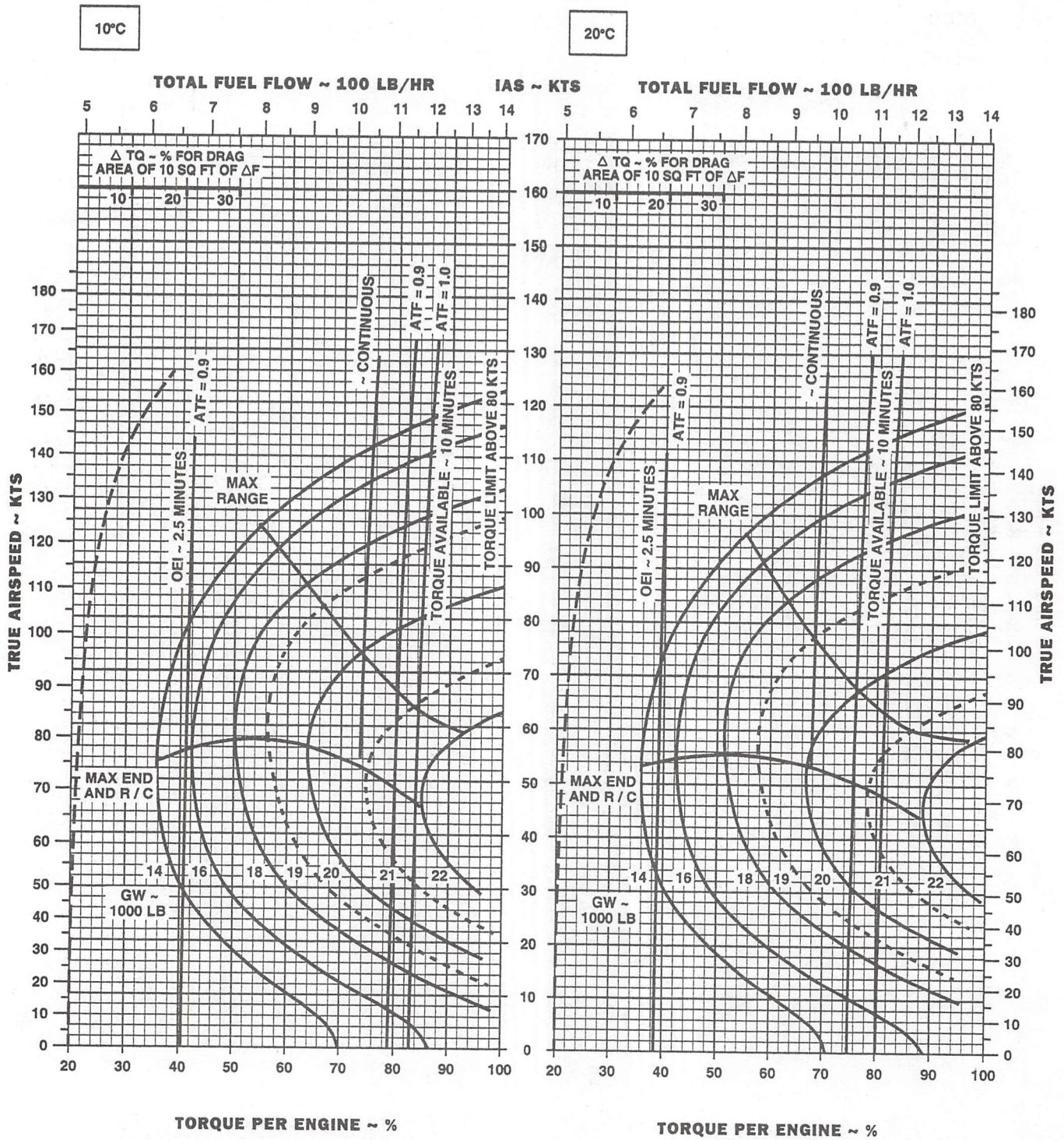

DATA BASIS: FLIGHT TEST

AK0932_4
SA

Figure 7-23. Cruise - Pressure Altitude 12,000 Feet - ETS Installed (Sheet 4 of 5)

CRUISE
ETS INSTALLED
PRESS ALT: 12000 FT

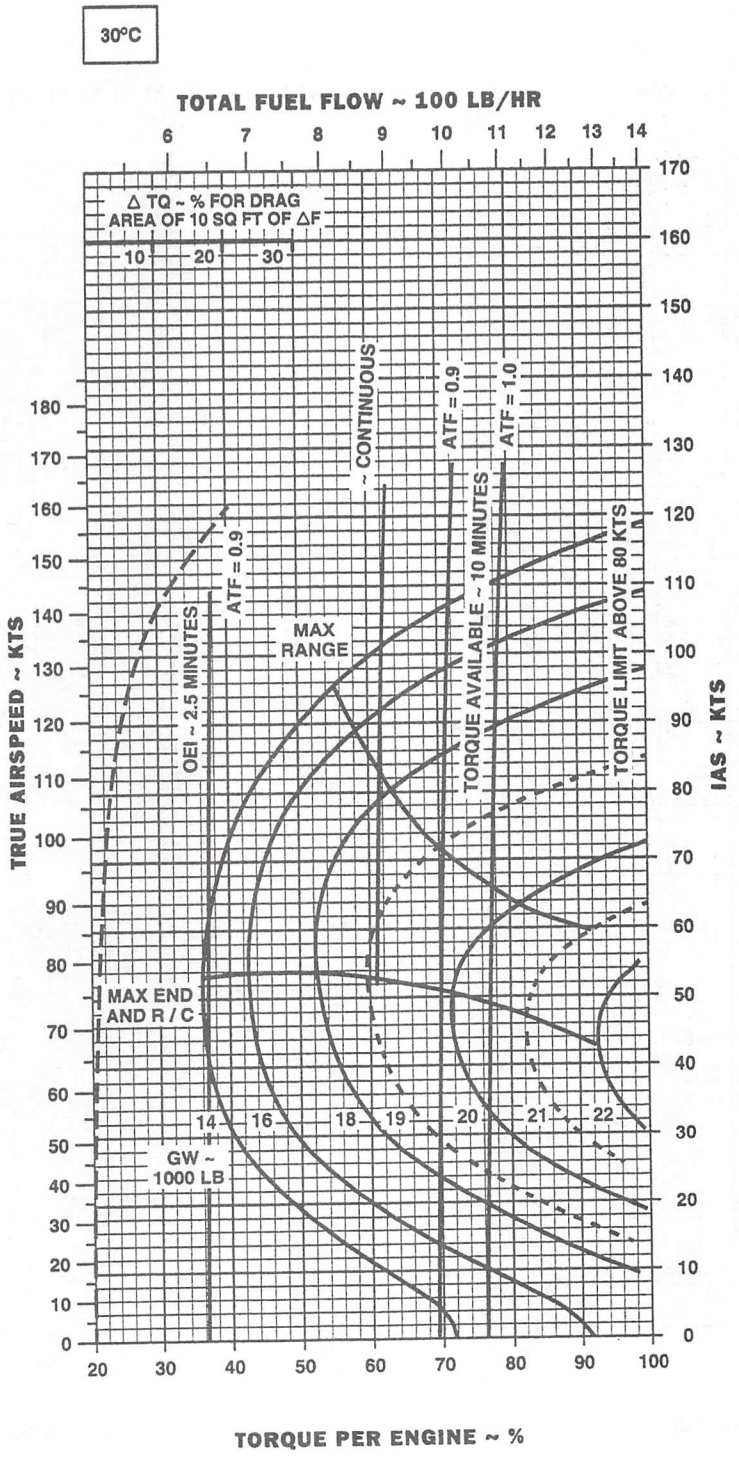

AK0932_5
SA

DATA BASIS: FLIGHT TEST

Figure 7-23. Cruise - Pressure Altitude 12,000 Feet - ETS Installed (Sheet 5 of 5)

CRUISE

CLEAN CONFIGURATION
PRESS ALT: 14000 FT

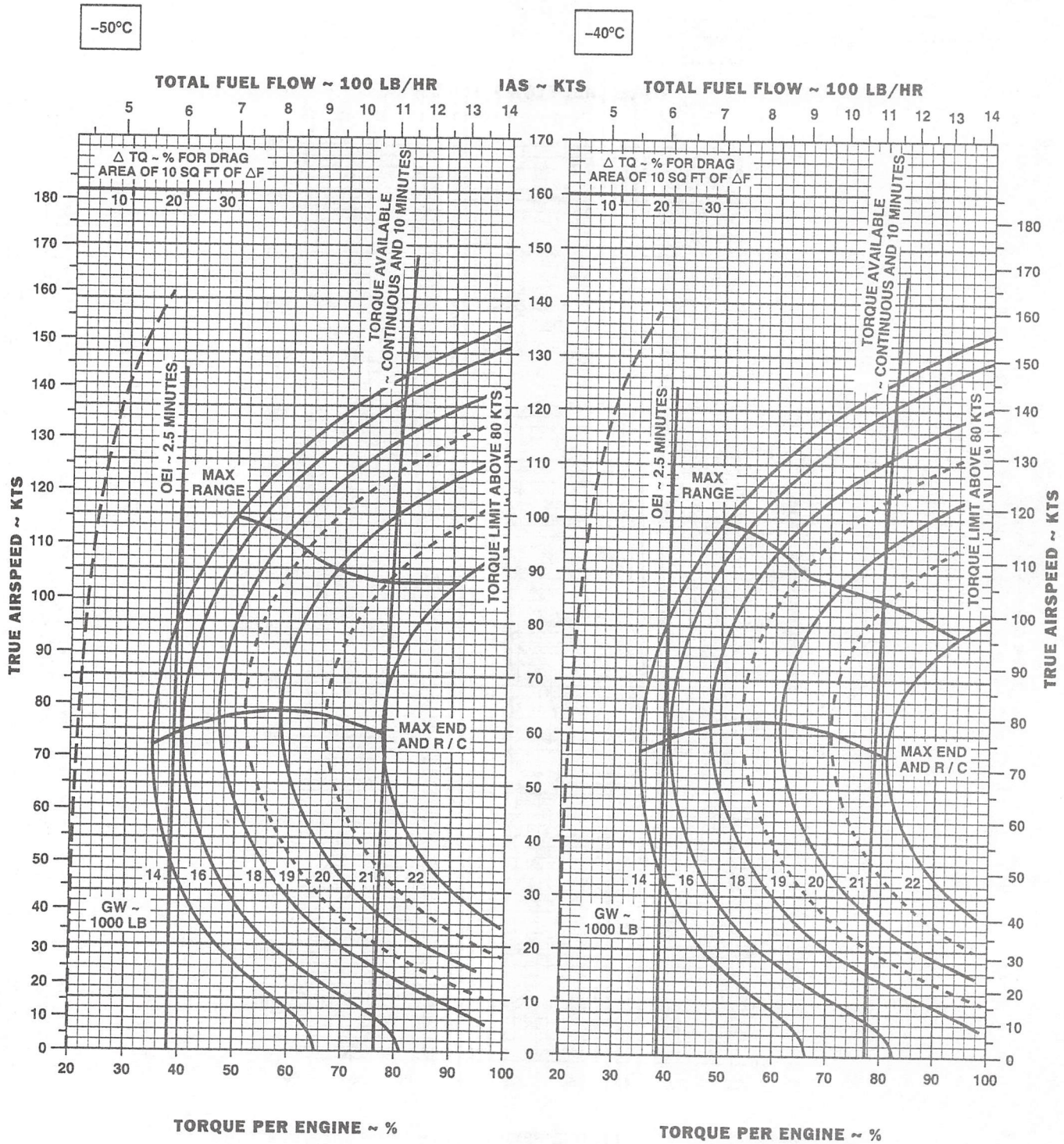

DATA BASIS: FLIGHT TEST

AK0295_1
SA

Figure 7-24. Cruise - Pressure Altitude 14,000 Feet - Clean (Sheet 1 of 4)

CRUISE

CLEAN CONFIGURATION
PRESS ALT: 14000 FT

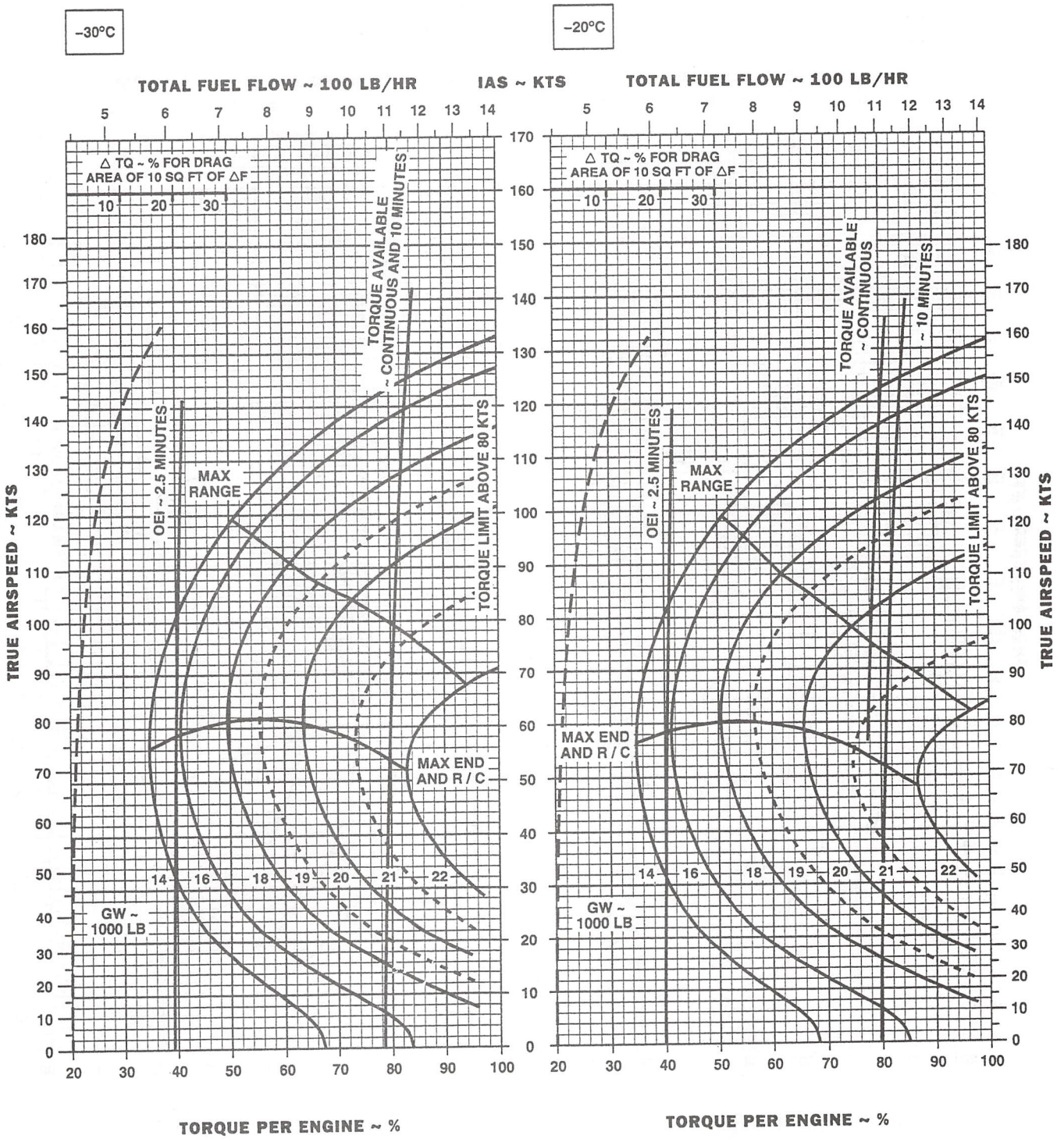

AK0295_2
SA

DATA BASIS: FLIGHT TEST

Figure 7-24. Cruise - Pressure Altitude 14,000 Feet - Clean (Sheet 2 of 4)

CRUISE

CLEAN CONFIGURATION
PRESS ALT: 14000 FT

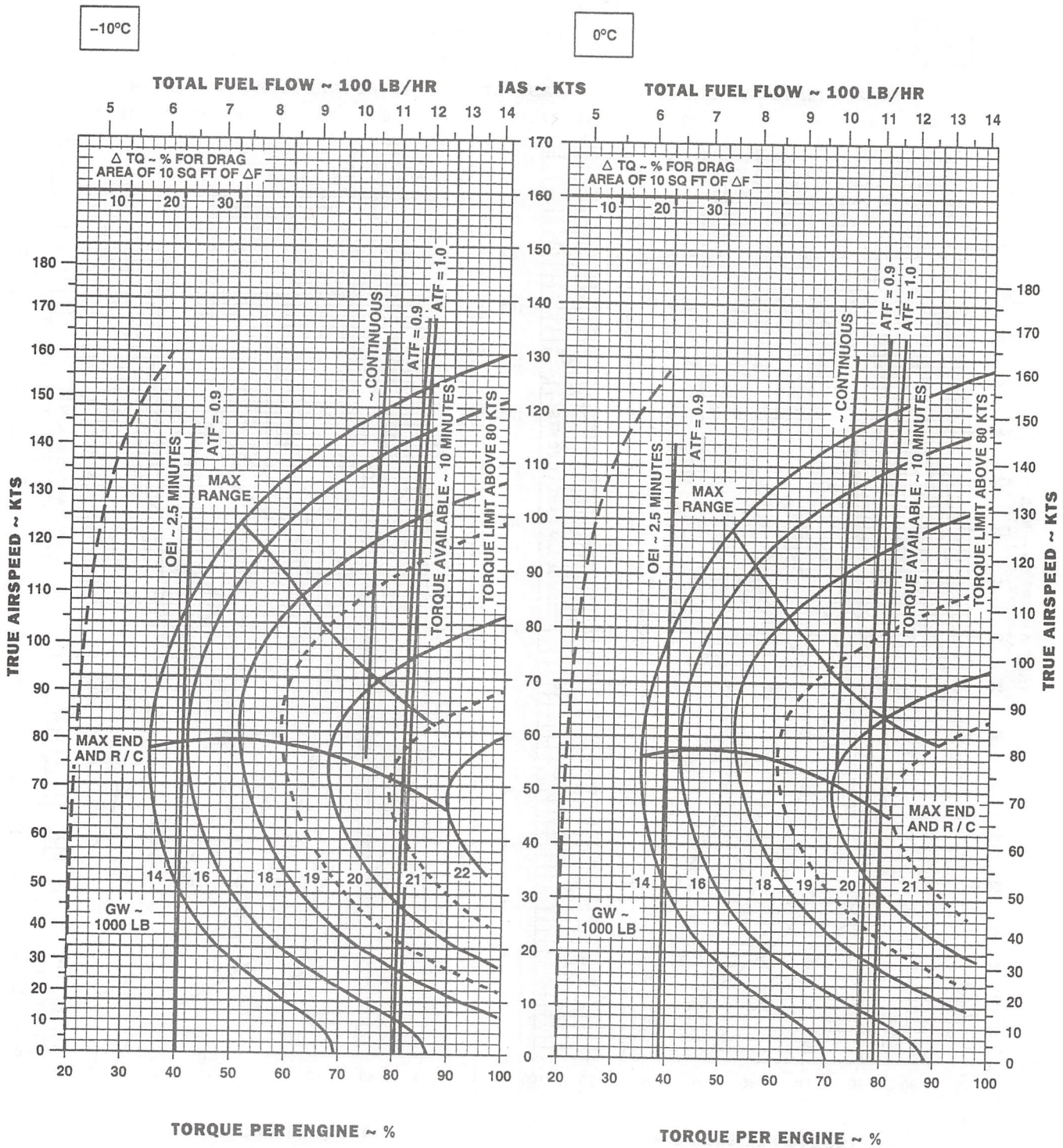

DATA BASIS: FLIGHT TEST

AK0295_3
SA

Figure 7-24. Cruise - Pressure Altitude 14,000 Feet - Clean (Sheet 3 of 4)

CRUISE

CLEAN CONFIGURATION
PRESS ALT: 14000 FT

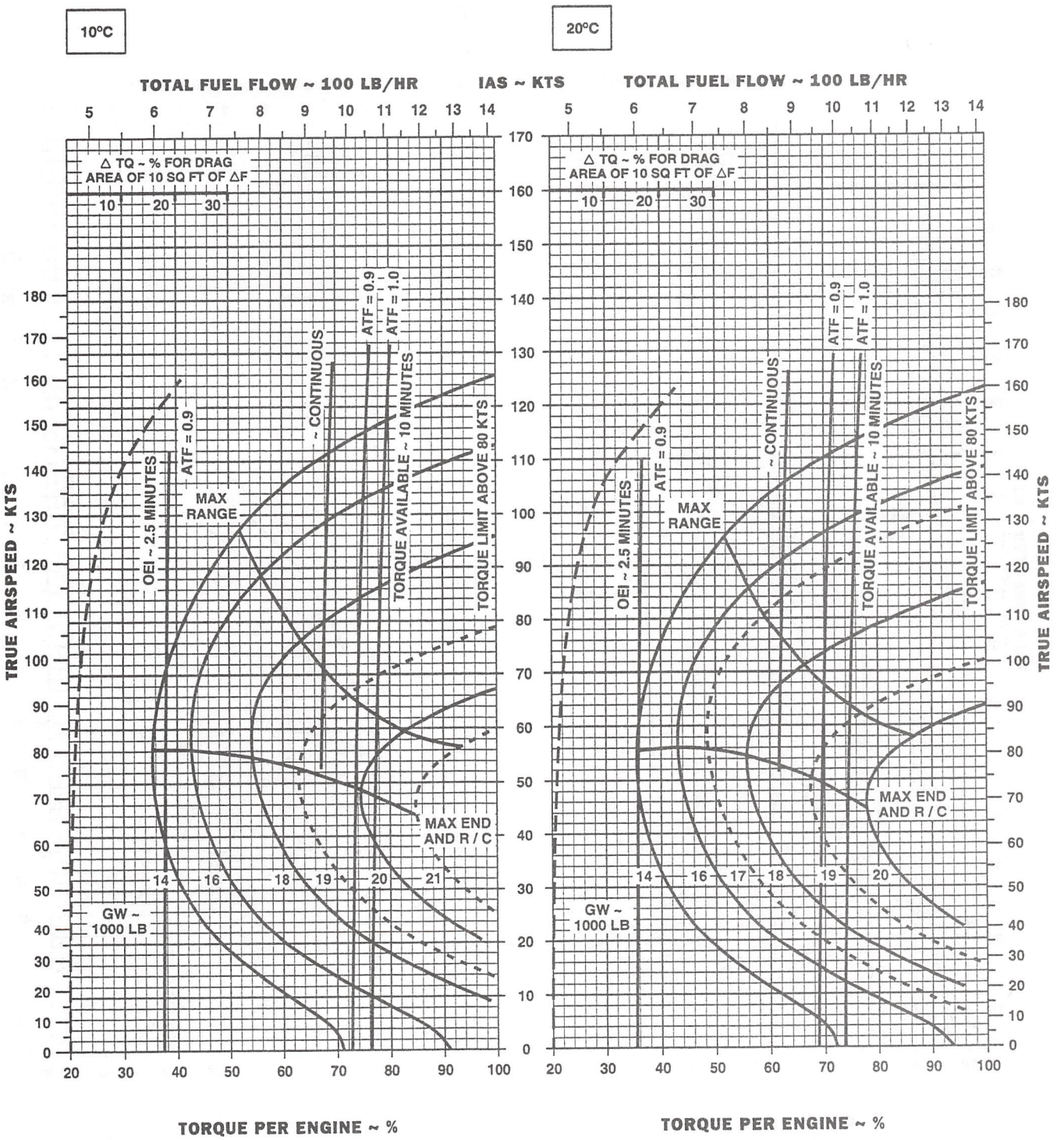

DATA BASIS: FLIGHT TEST

AK0295_4
SA

Figure 7-24. Cruise - Pressure Altitude 14,000 Feet - Clean (Sheet 4 of 4)

CRUISE

ETS INSTALLED

PRESS ALT: 14000 FT

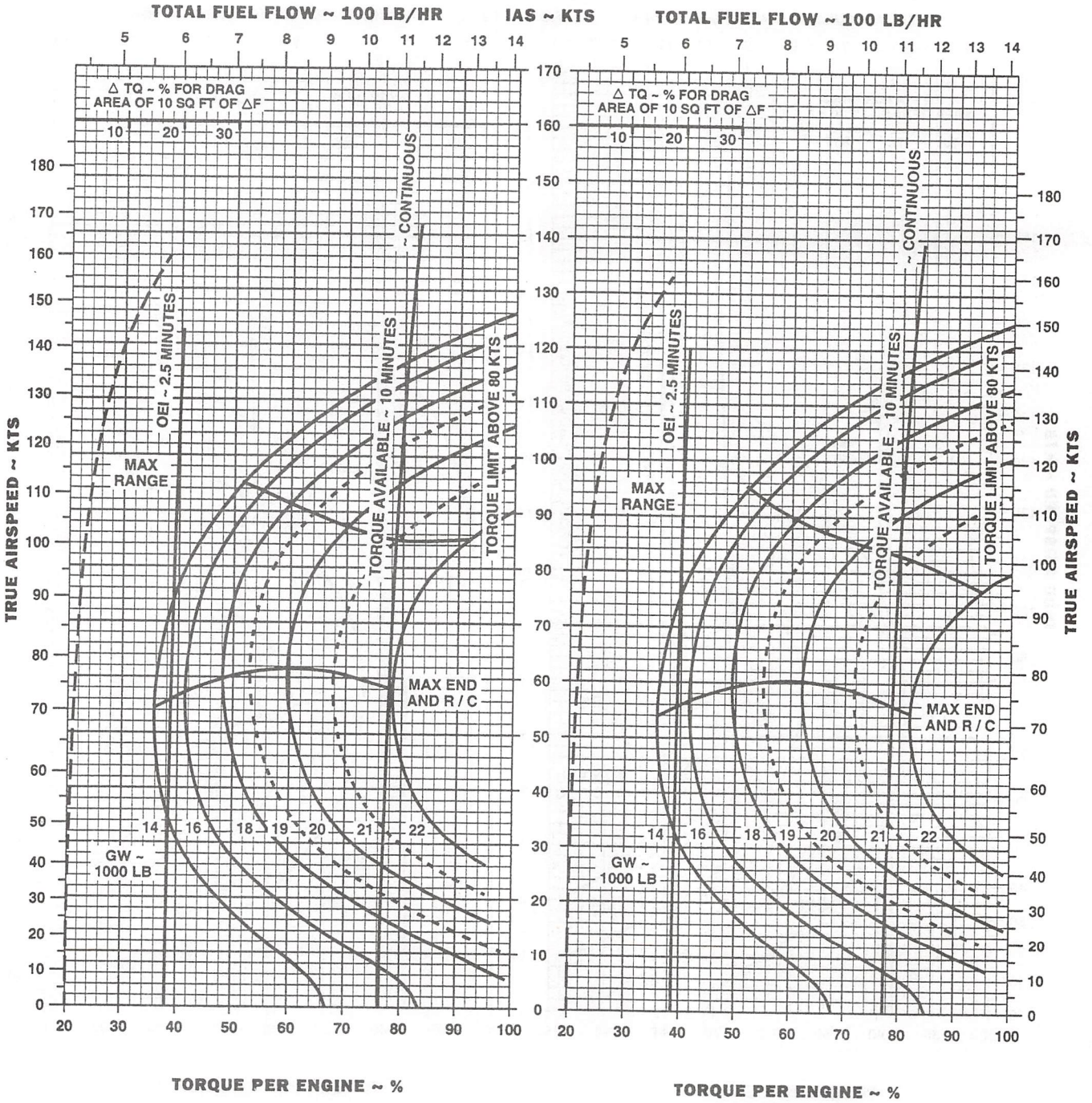

DATA BASIS: FLIGHT TEST

AK0933_1
SA

Figure 7-25. Cruise - Pressure Altitude 14,000 Feet - ETS Installed (Sheet 1 of 4)

CRUISE

ETS INSTALLED

PRESS ALT: 14000 FT

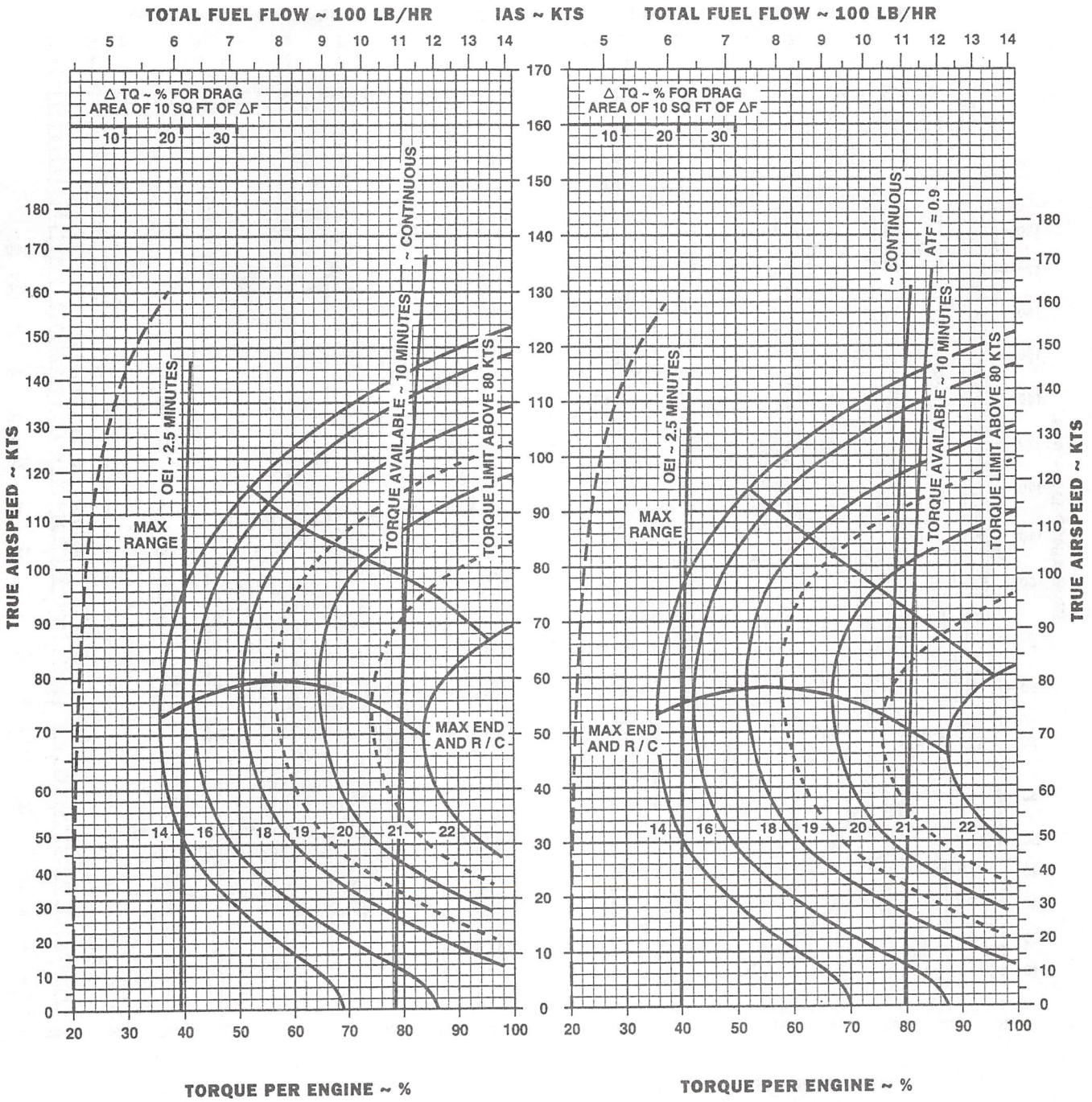

DATA BASIS: FLIGHT TEST

AK0933_2
SA

Figure 7-25. Cruise - Pressure Altitude 14,000 Feet - ETS Installed (Sheet 2 of 4)

CRUISE

ETS INSTALLED

PRESS ALT: 14000 FT

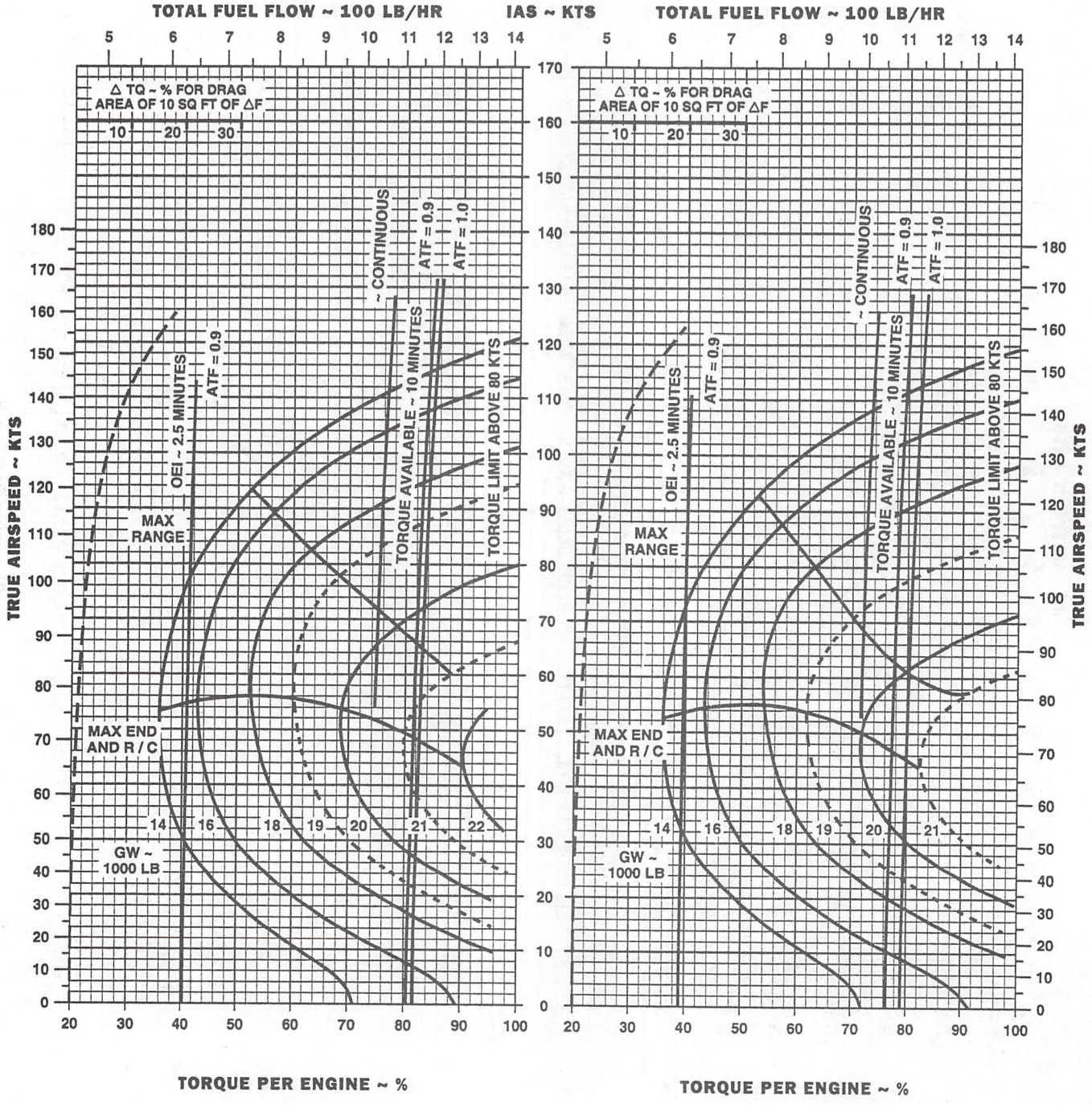

DATA BASIS: FLIGHT TEST

AK0933_3 SA

Figure 7-25. Cruise - Pressure Altitude 14,000 Feet - ETS Installed (Sheet 3 of 4)

CRUISE
ETS INSTALLED
PRESS ALT: 14000 FT

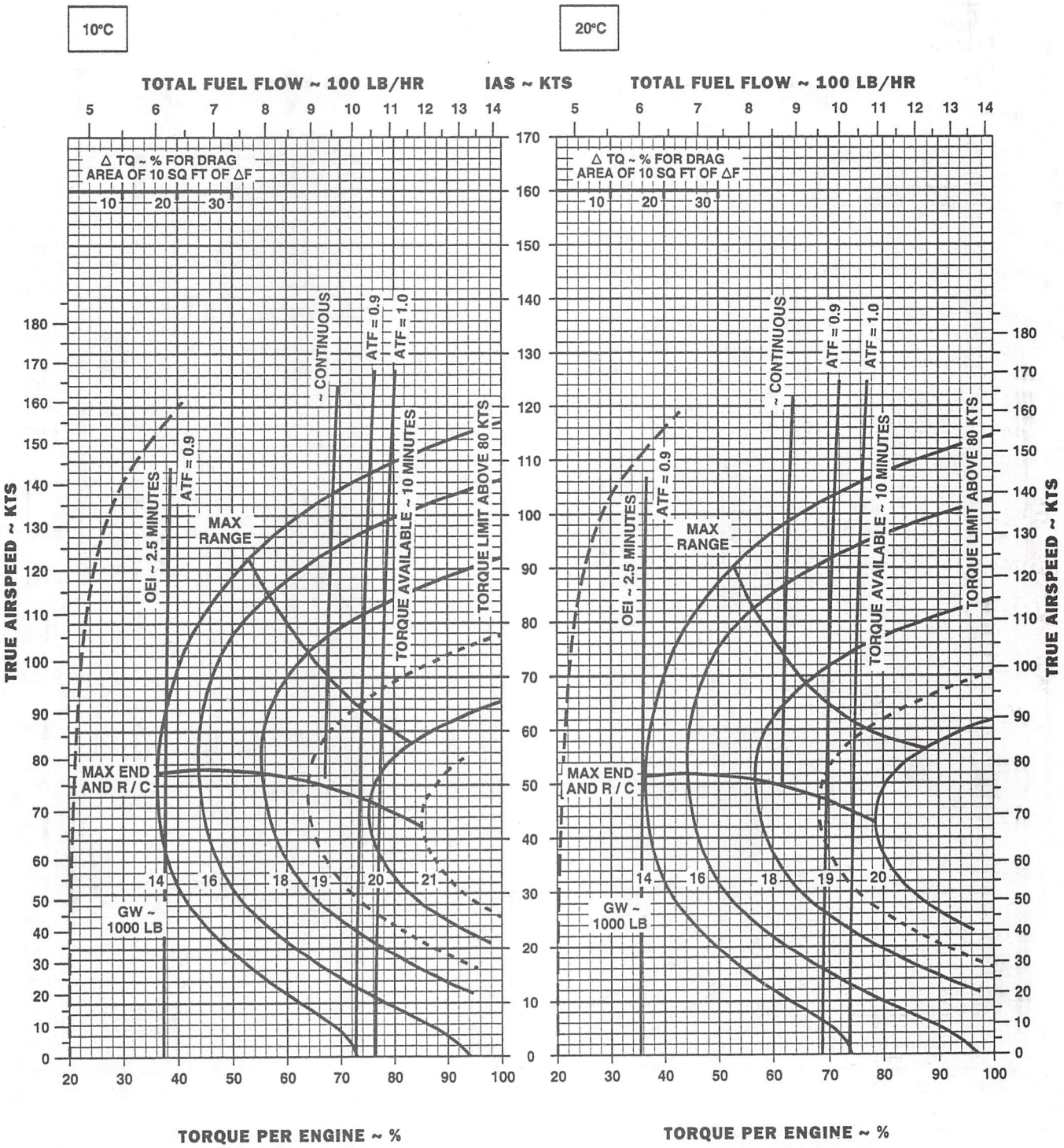

DATA BASIS: FLIGHT TEST

AK0933_4 SA

Figure 7-25. Cruise - Pressure Altitude 14,000 Feet - ETS Installed (Sheet 4 of 4)

CRUISE

CLEAN CONFIGURATION
PRESS ALT: 16000 FT

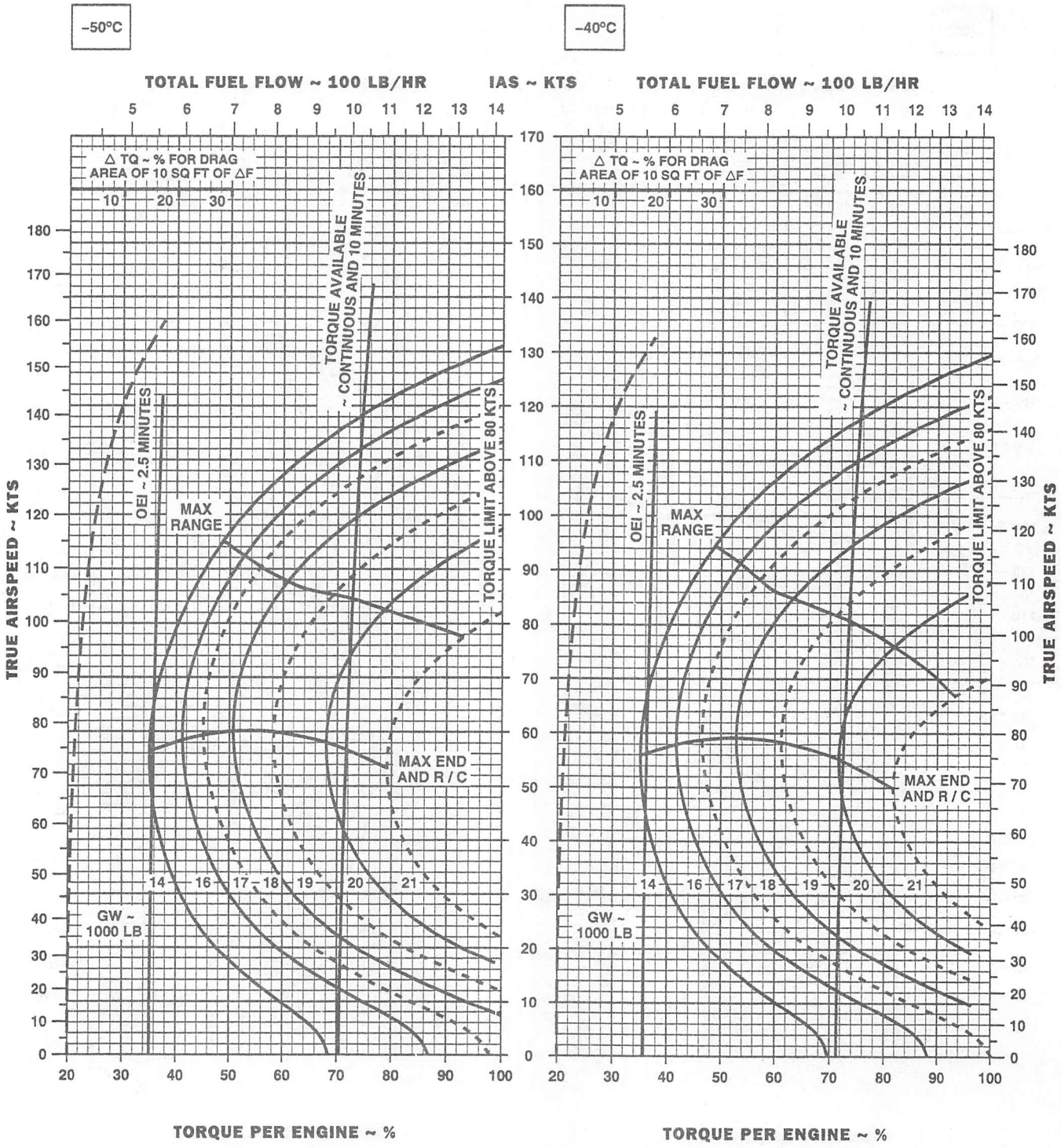

DATA BASIS: FLIGHT TEST

AK0296_1
SA

Figure 7-26. Cruise - Pressure Altitude 16,000 Feet - Clean (Sheet 1 of 4)

CRUISE

CLEAN CONFIGURATION
PRESS ALT: 16000 FT

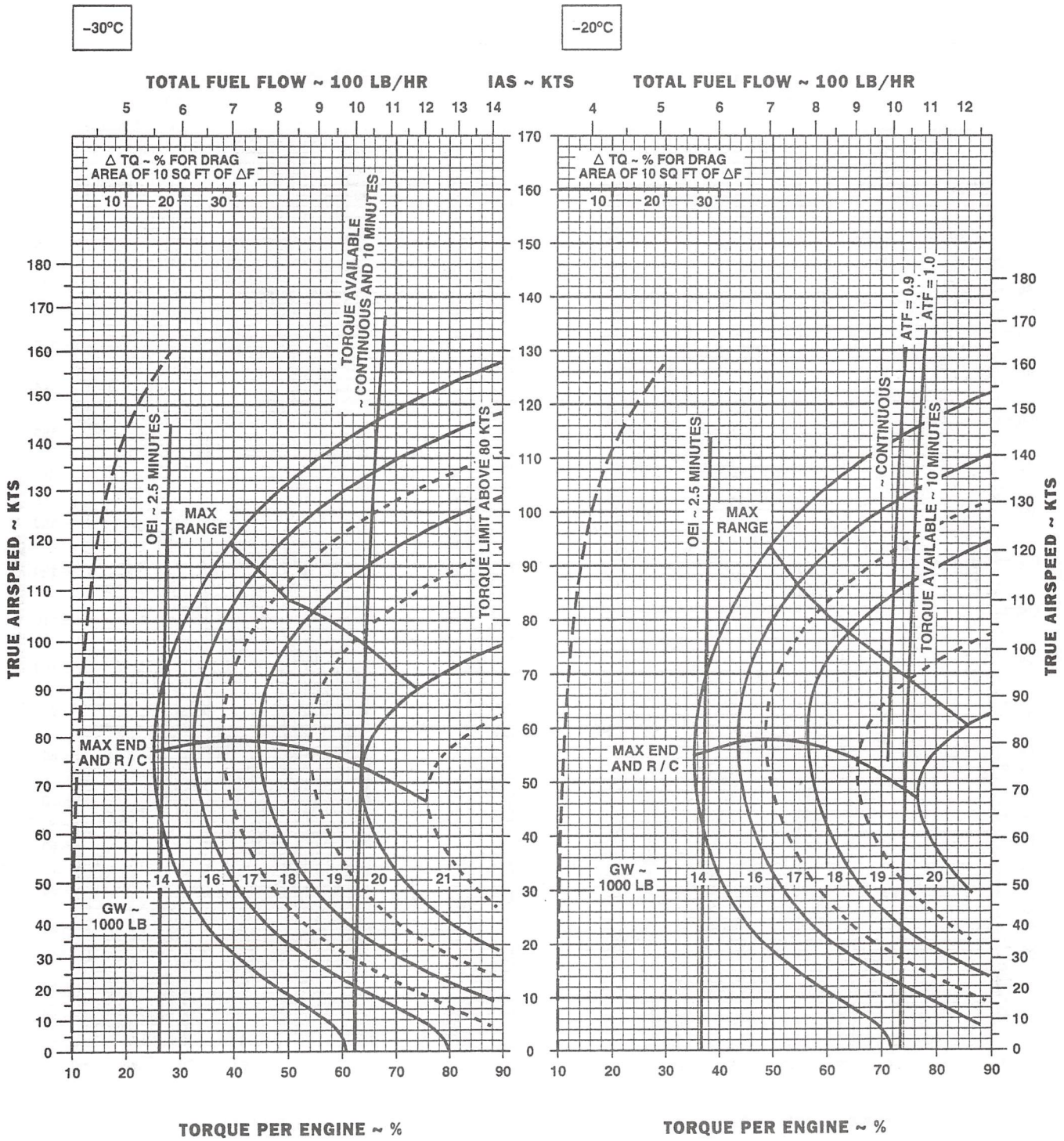

DATA BASIS: FLIGHT TEST

AK0296_2
SA

Figure 7-26. Cruise - Pressure Altitude 16,000 Feet - Clean (Sheet 2 of 4)

CRUISE

CLEAN CONFIGURATION
PRESS ALT: 16000 FT

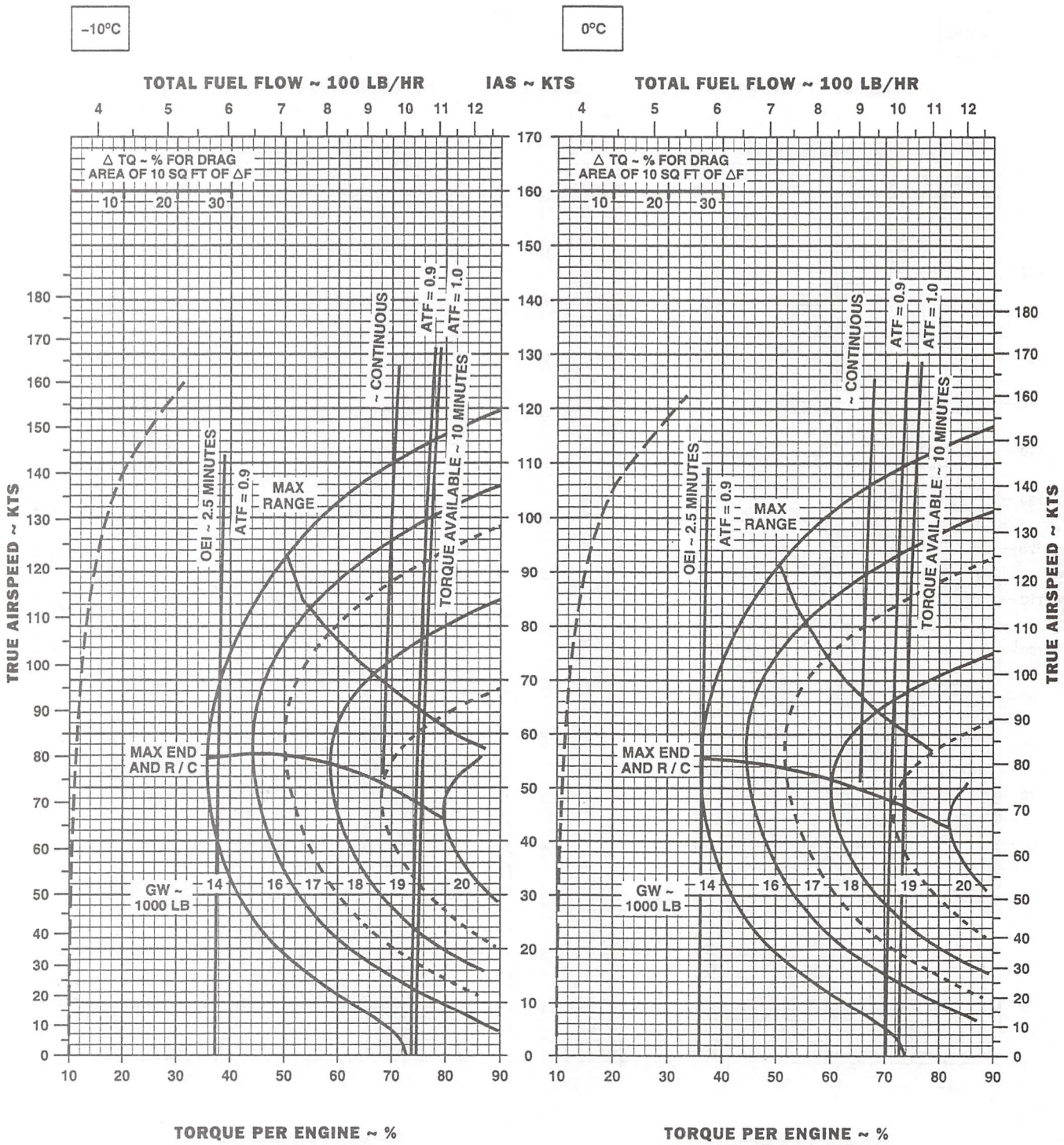

DATA BASIS: FLIGHT TEST

AK0296_3
SA

Figure 7-26. Cruise - Pressure Altitude 16,000 Feet - Clean (Sheet 3 of 4)

CRUISE

CLEAN CONFIGURATION
PRESS ALT: 16000 FT

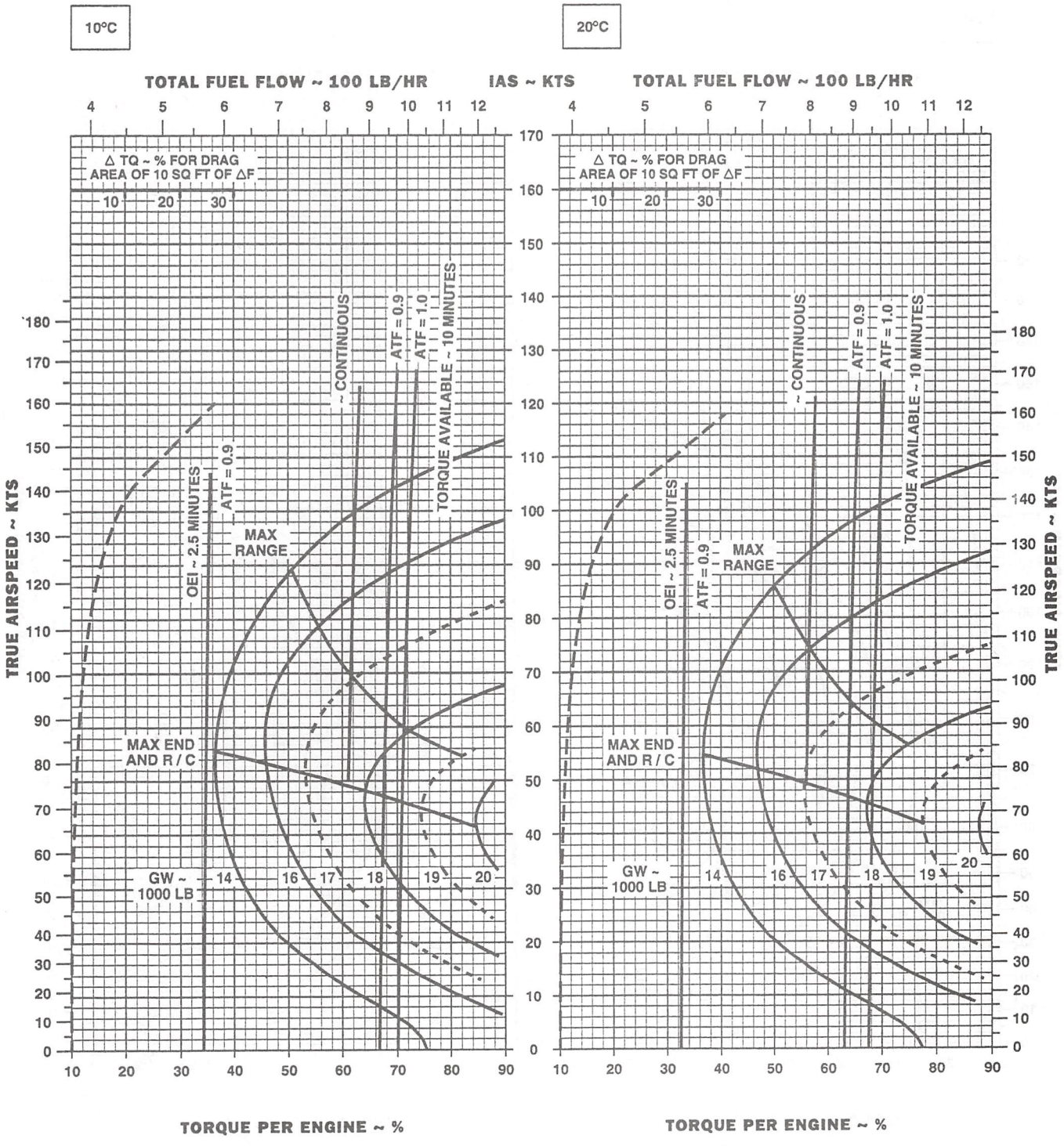

DATA BASIS: FLIGHT TEST

AK0296_4
SA

Figure 7-26. Cruise - Pressure Altitude 16,000 Feet - Clean (Sheet 4 of 4)

CRUISE
ETS INSTALLED
PRESS ALT: 16000 FT

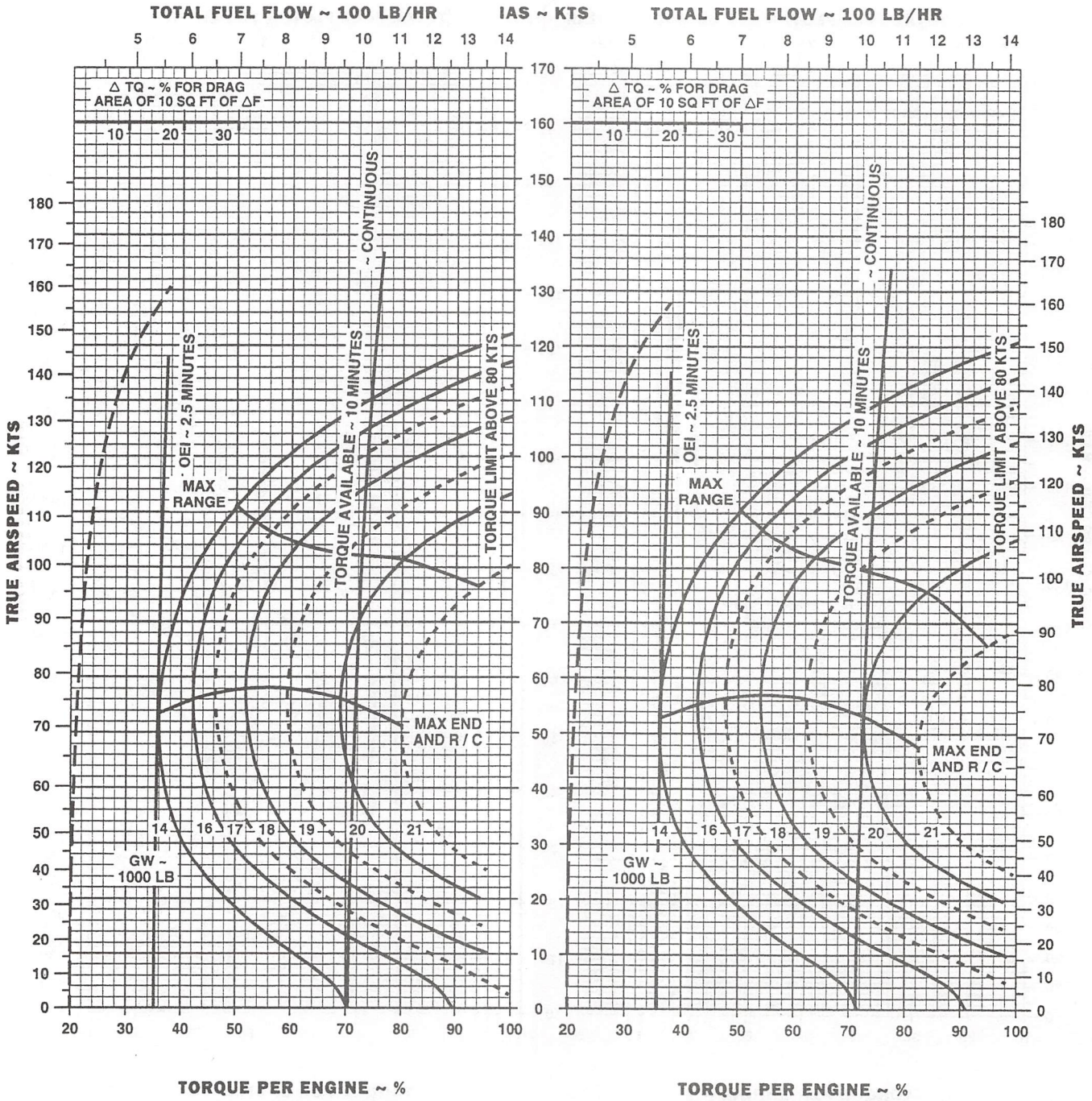

DATA BASIS: FLIGHT TEST

AK0934_1
SA

Figure 7-27. Cruise - Pressure Altitude 16,000 Feet - ETS Installed (Sheet 1 of 4)

CRUISE

ETS INSTALLED

PRESS ALT: 16000 FT

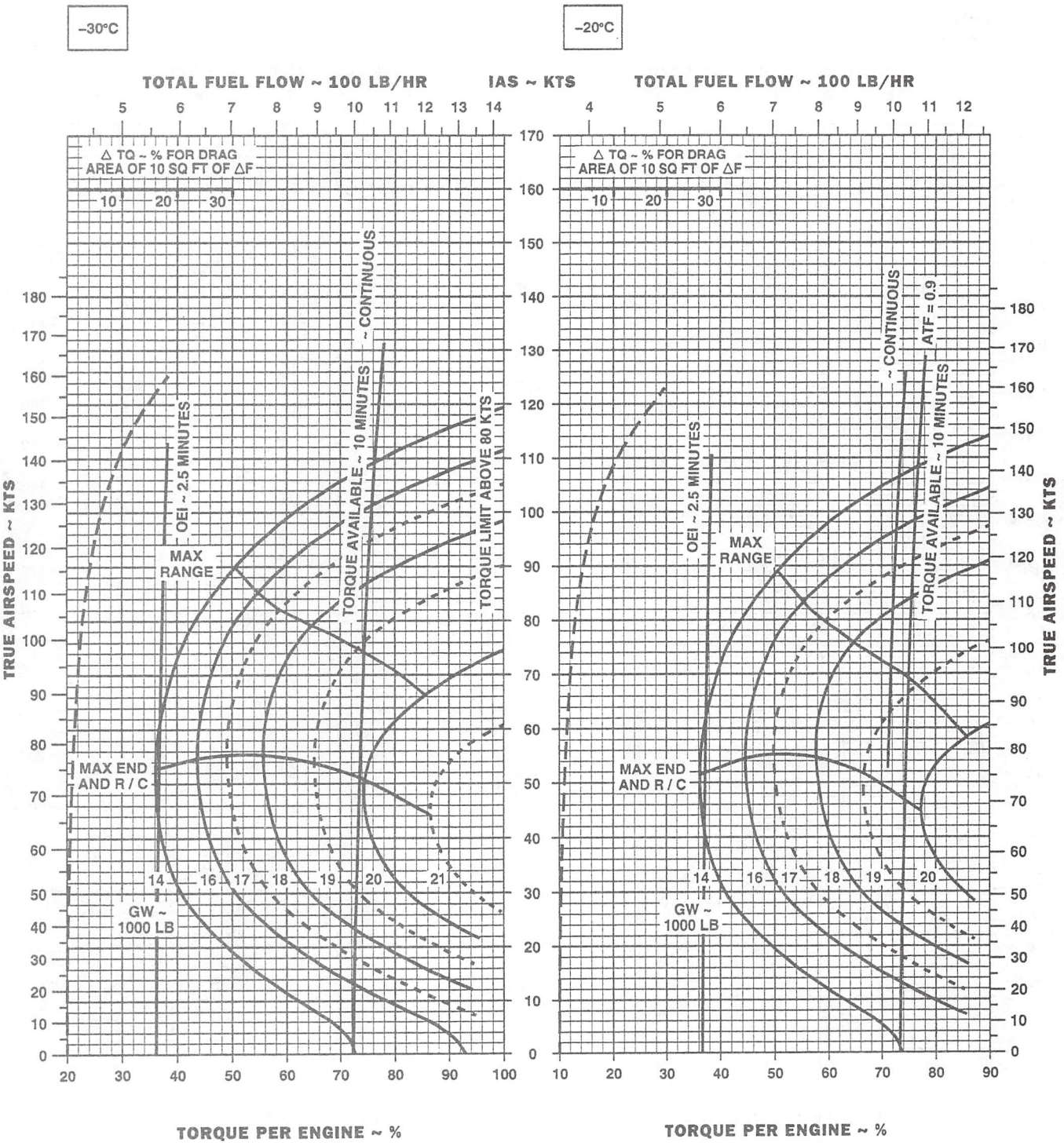

DATA BASIS: FLIGHT TEST

AK0934_2
SA

Figure 7-27. Cruise - Pressure Altitude 16,000 Feet - ETS Installed (Sheet 2 of 4)

CRUISE
ETS INSTALLED
PRESS ALT: 16000 FT

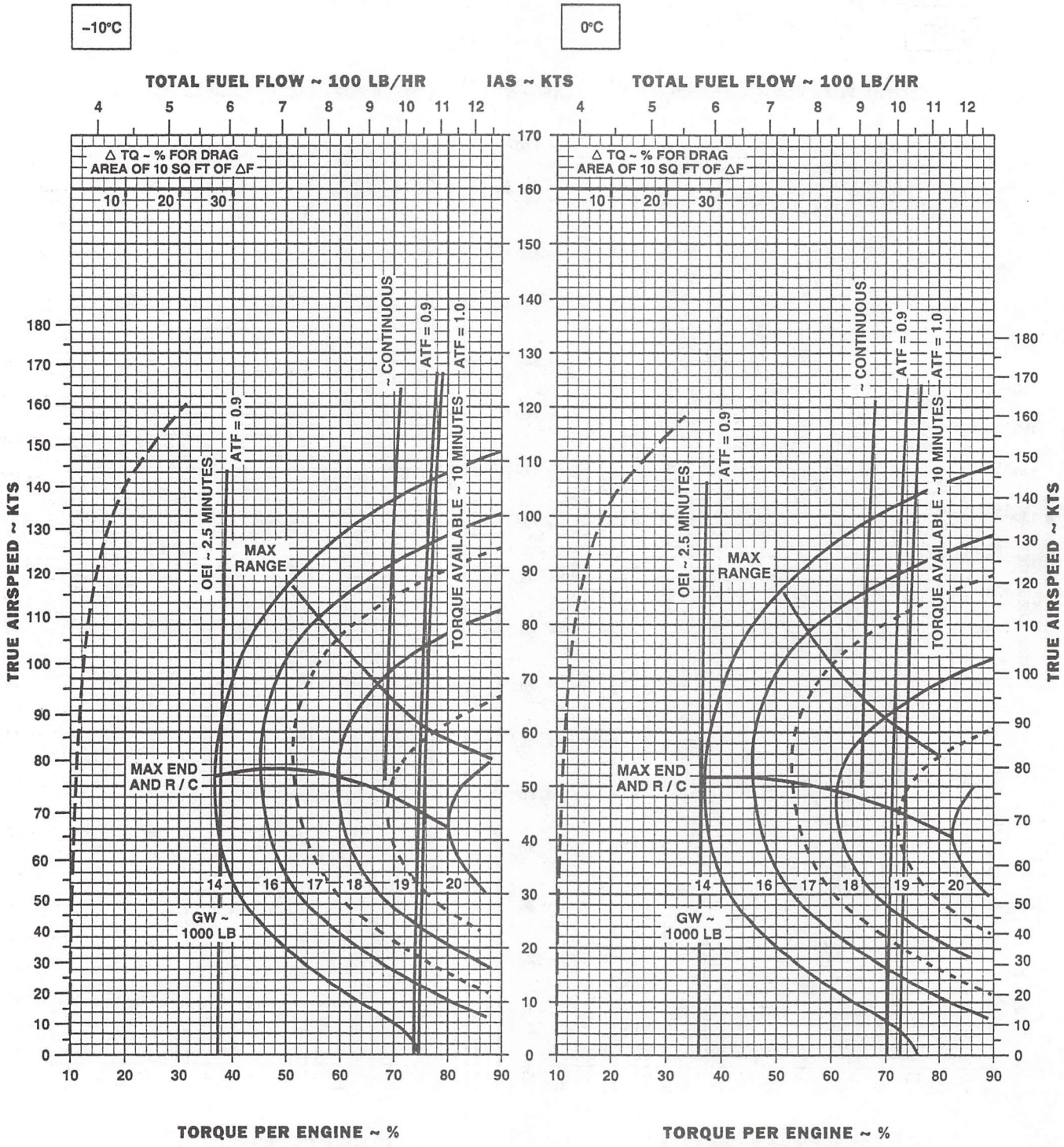

DATA BASIS: FLIGHT TEST

AK0934_3
SA

Figure 7-27. Cruise - Pressure Altitude 16,000 Feet - ETS Installed (Sheet 3 of 4)

CRUISE

ETS INSTALLED

PRESS ALT: 16000 FT

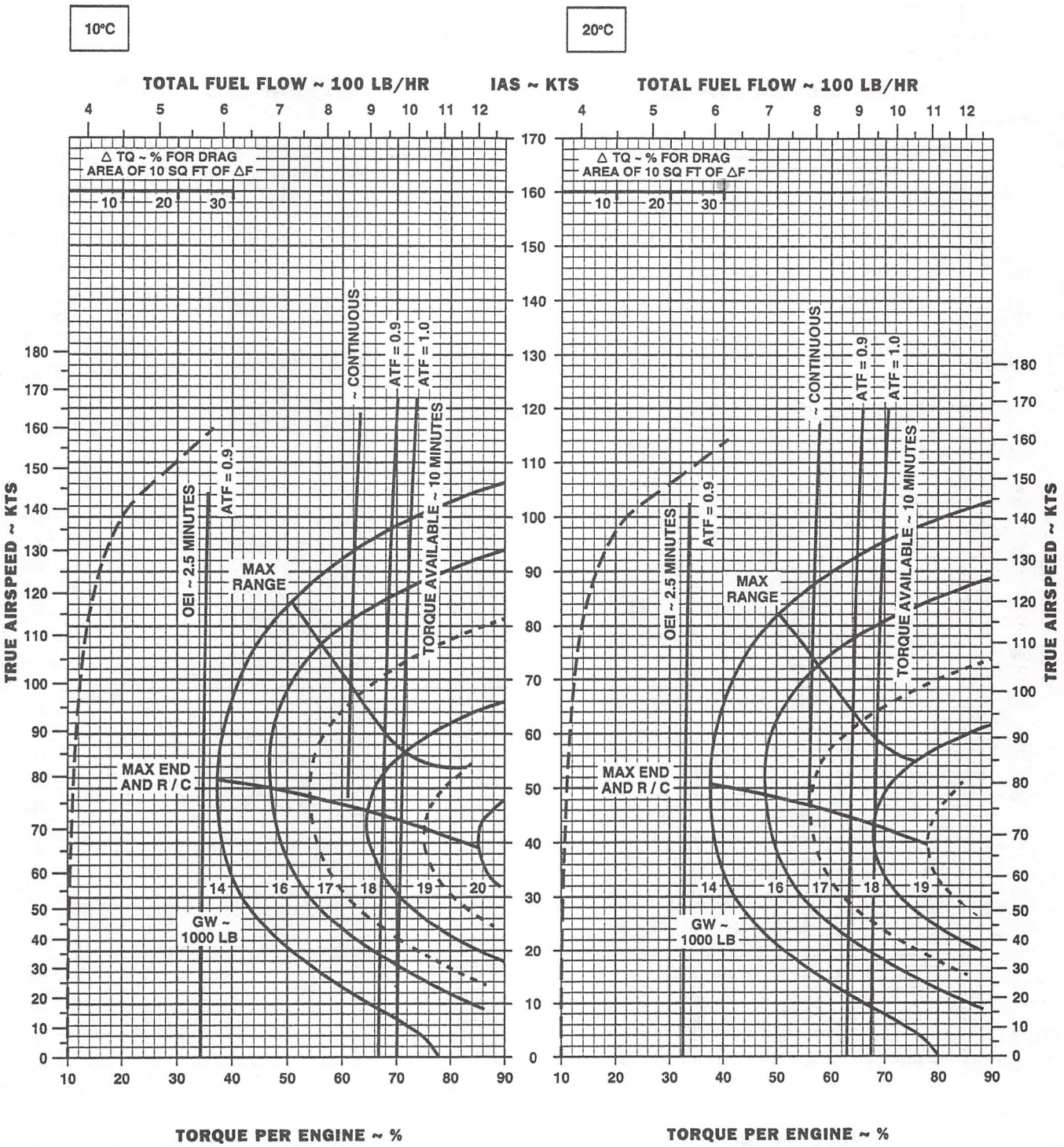

DATA BASIS: FLIGHT TEST

AK0934_4
SA

Figure 7-27. Cruise - Pressure Altitude 16,000 Feet - ETS Installed (Sheet 4 of 4)

CRUISE

CLEAN CONFIGURATION
PRESS ALT: 18000 FT

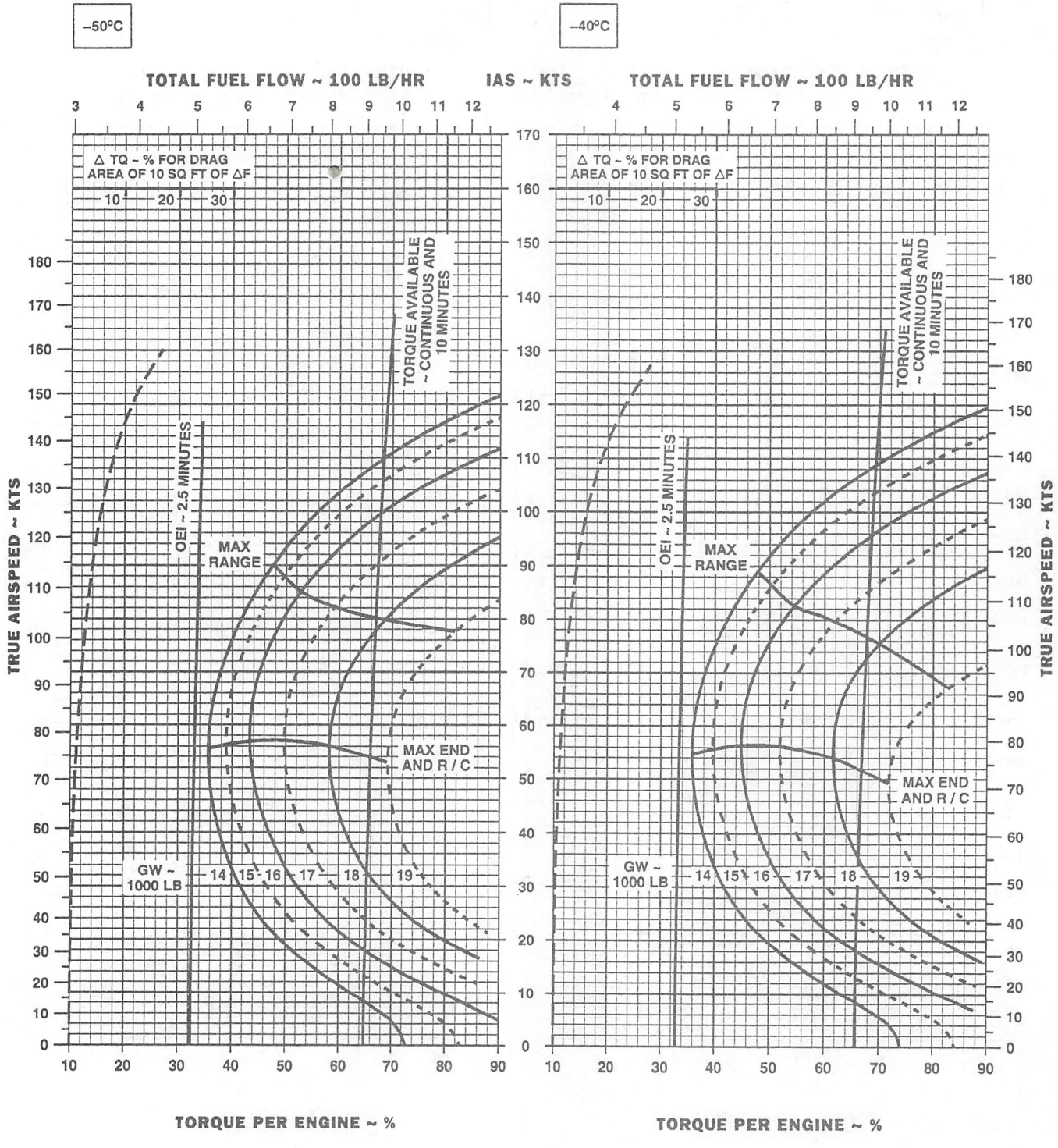

DATA BASIS: FLIGHT TEST

AK0297_1 SA

Figure 7-28. Cruise - Pressure Altitude 18,000 Feet - Clean (Sheet 1 of 4)

CRUISE

CLEAN CONFIGURATION
PRESS ALT: 18000 FT

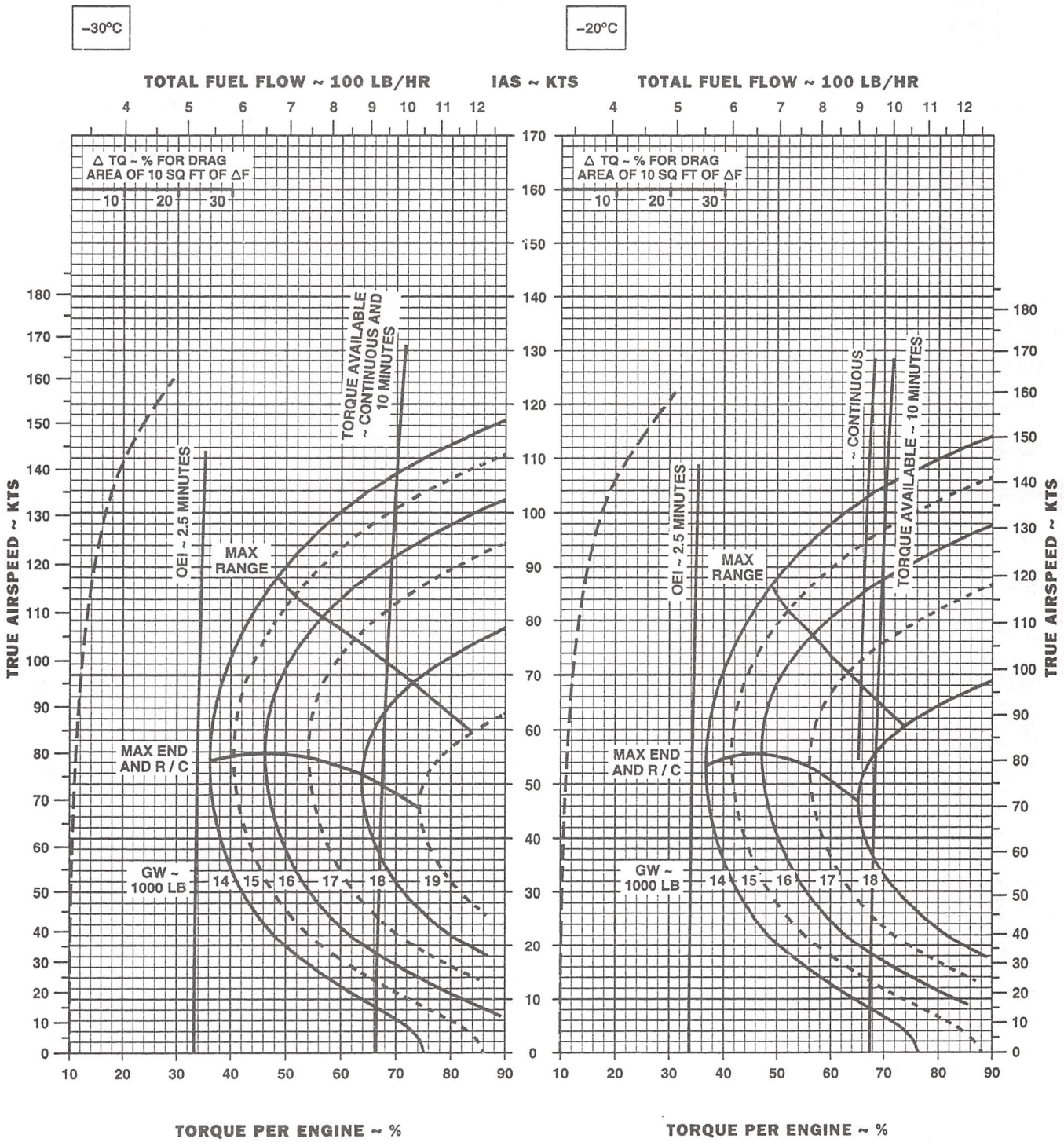

DATA BASIS: FLIGHT TEST

AK0297_2
SA

Figure 7-28. Cruise - Pressure Altitude 18,000 Feet - Clean (Sheet 2 of 4)

CRUISE

CLEAN CONFIGURATION
PRESS ALT: 18000 FT

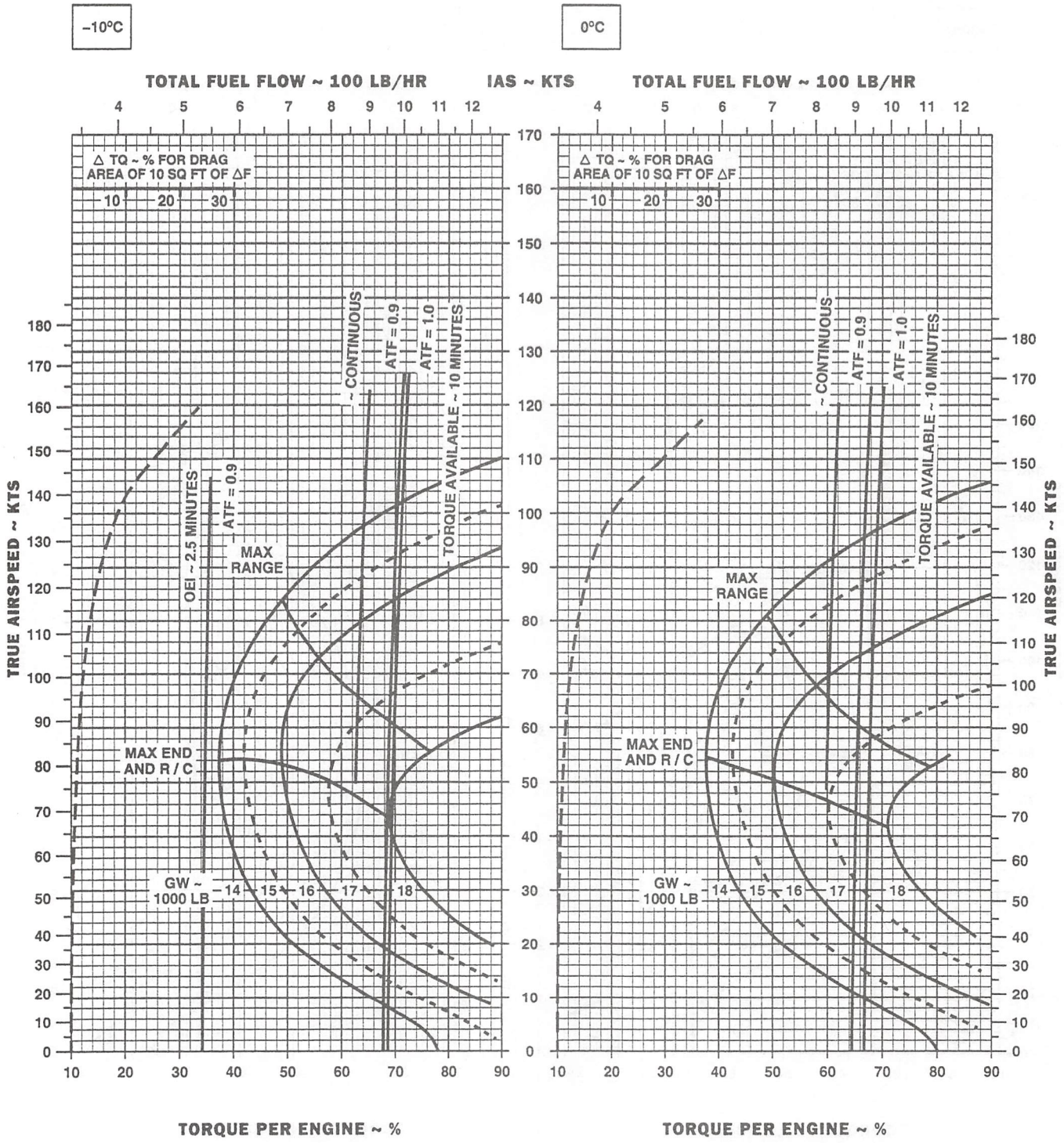

DATA BASIS: FLIGHT TEST

AK0297_3
SA

Figure 7-28. Cruise - Pressure Altitude 18,000 Feet - Clean (Sheet 3 of 4)

CRUISE

CLEAN CONFIGURATION
PRESS ALT: 18000 FT

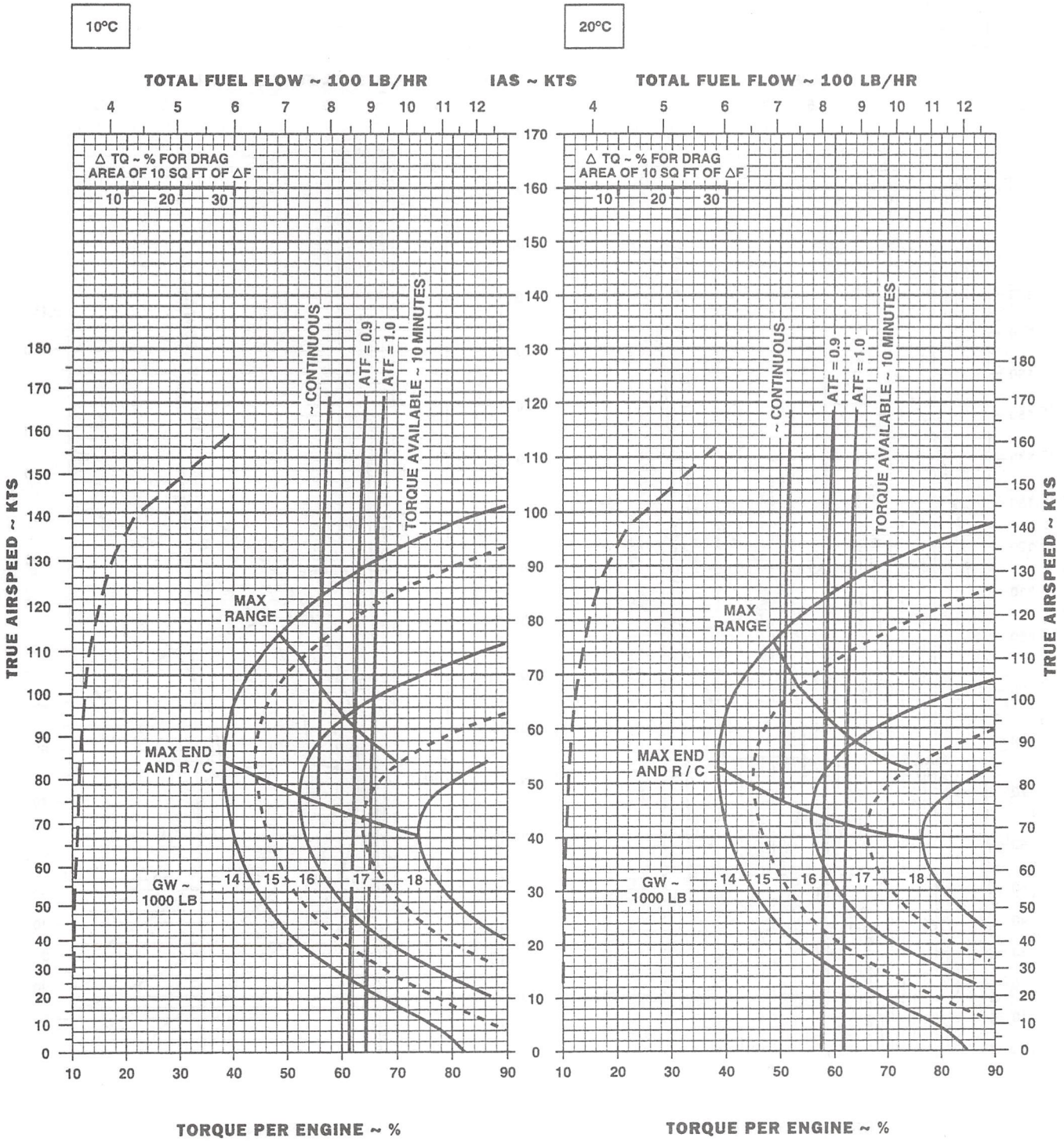

DATA BASIS: FLIGHT TEST

AK0297_4
SA

Figure 7-28. Cruise - Pressure Altitude 18,000 Feet - Clean (Sheet 4 of 4)

CRUISE

ETS INSTALLED

PRESS ALT: 18000 FT

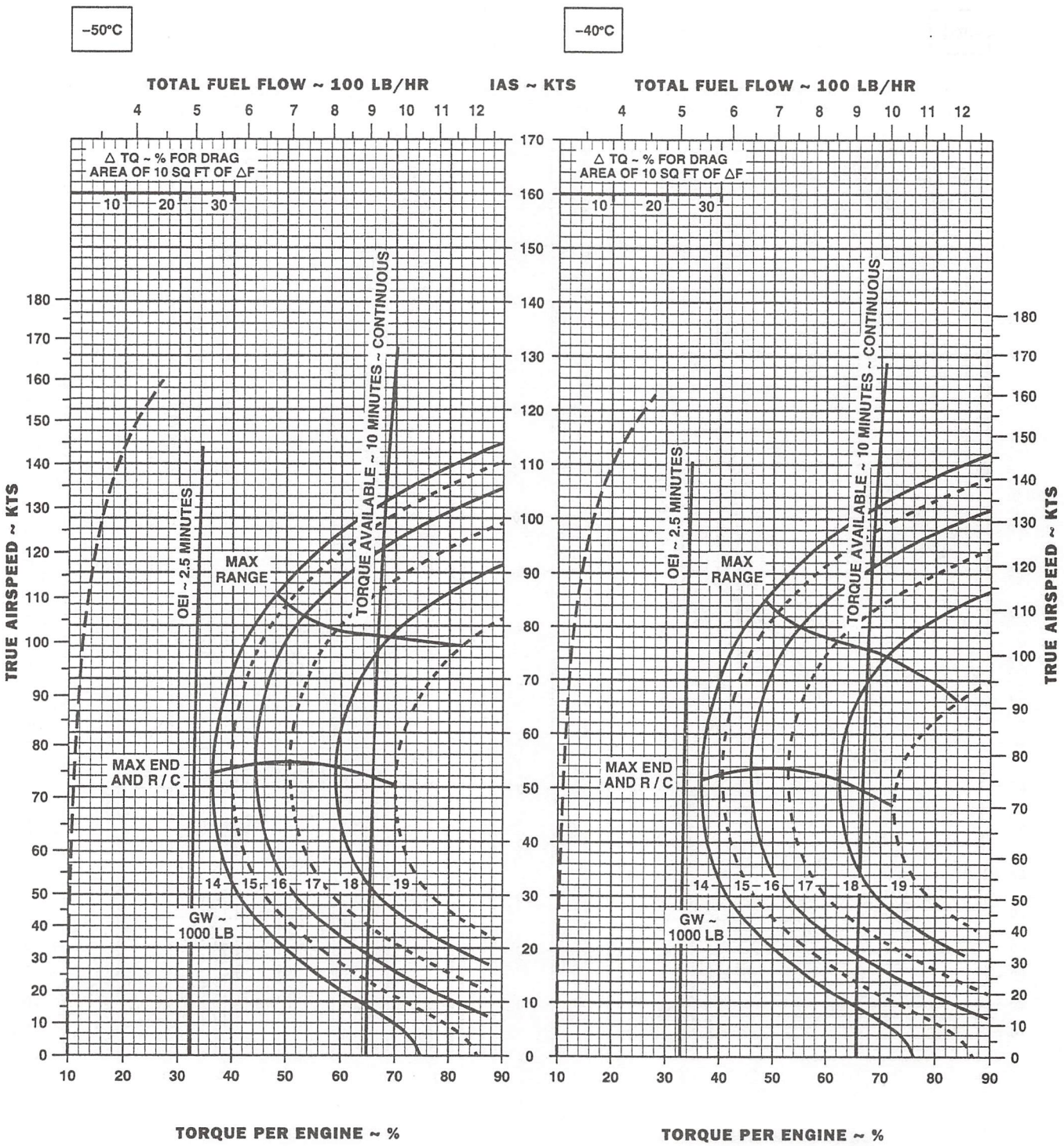

DATA BASIS: FLIGHT TEST

AK0935_1
SA

Figure 7-29. Cruise - Pressure Altitude 18,000 Feet - ETS Installed (Sheet 1 of 4)

CRUISE

ETS INSTALLED

PRESS ALT: 18000 FT

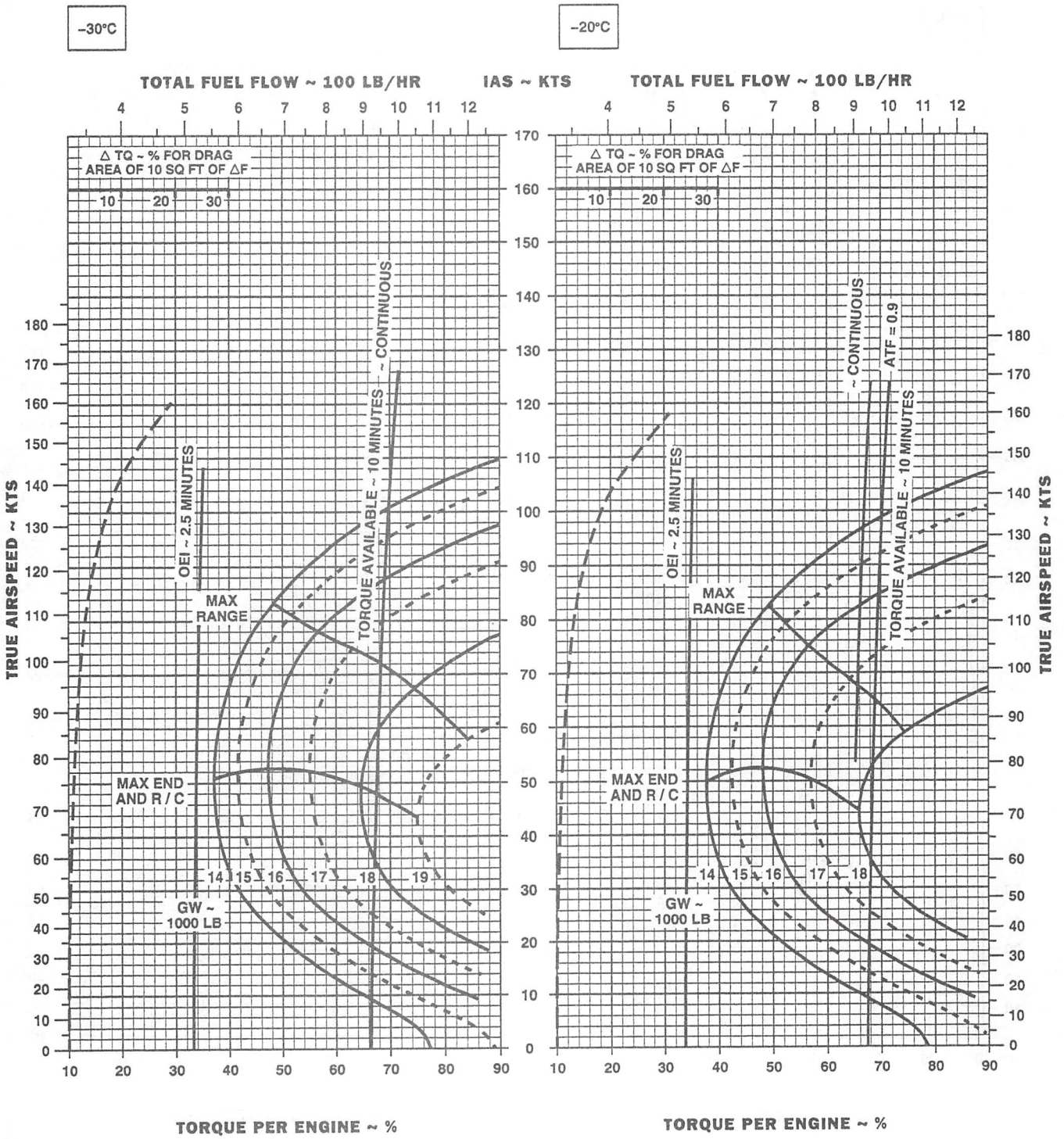

DATA BASIS: FLIGHT TEST

AK0935_2
SA

Figure 7-29. Cruise - Pressure Altitude 18,000 Feet - ETS Installed (Sheet 2 of 4)

CRUISE
ETS INSTALLED
PRESS ALT: 18000 FT

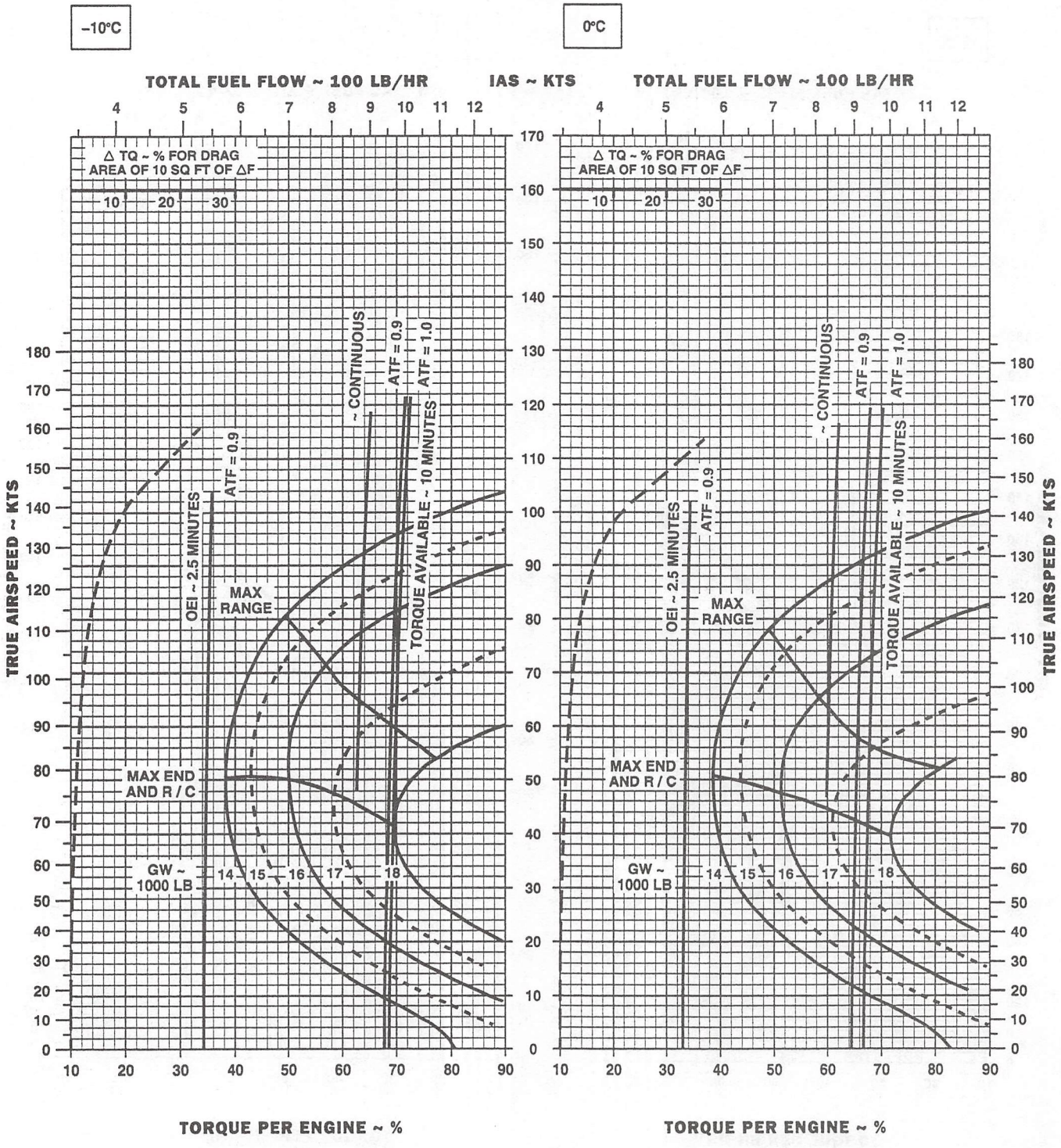

DATA BASIS: FLIGHT TEST

AK0935_3
SA

Figure 7-29. Cruise - Pressure Altitude 18,000 Feet - ETS Installed (Sheet 3 of 4)

CRUISE
ETS INSTALLED
PRESS ALT: 18000 FT

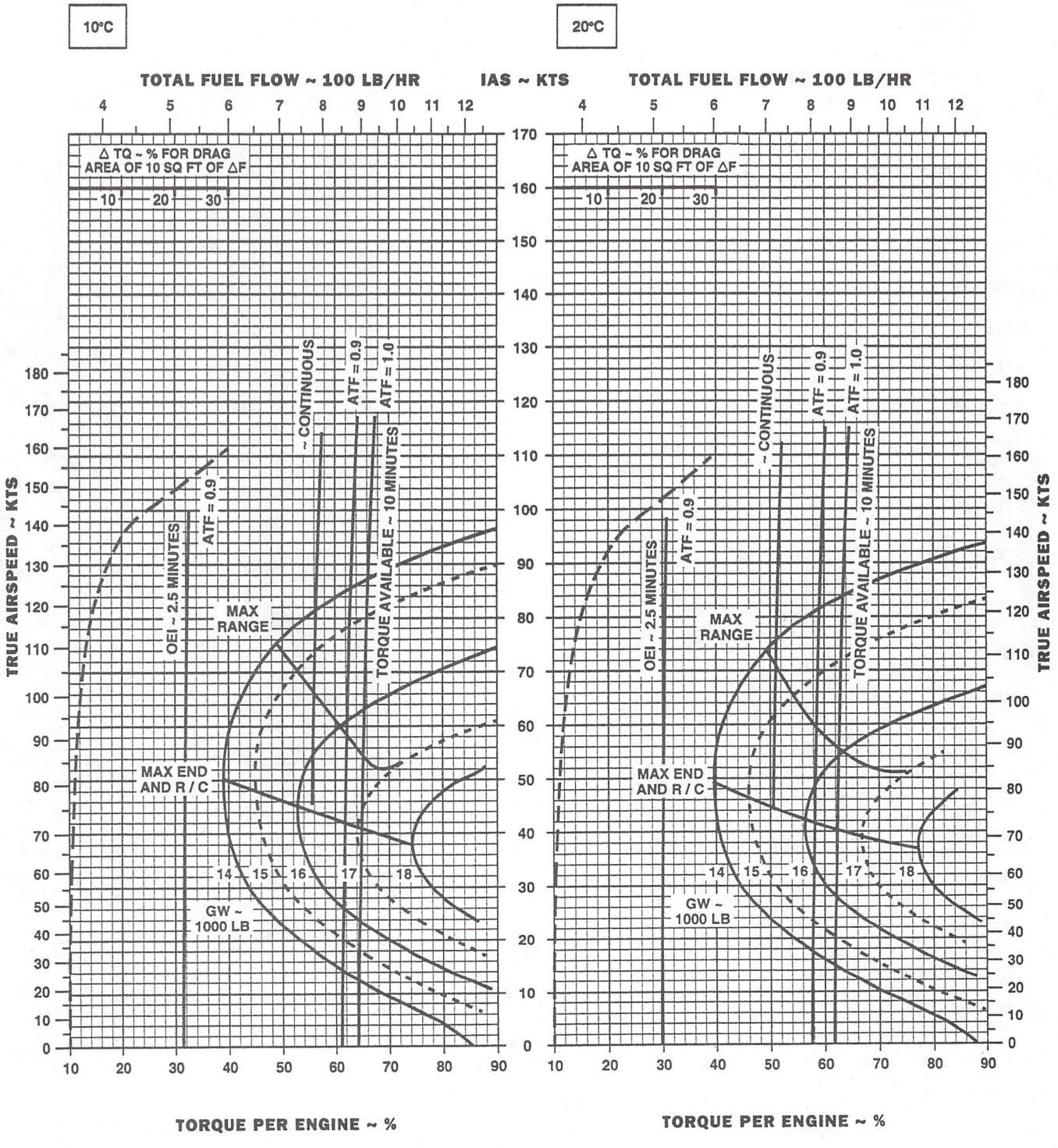

DATA BASIS: FLIGHT TEST

Figure 7-29. Cruise - Pressure Altitude 18,000 Feet - ETS Installed (Sheet 4 of 4)

CRUISE

CLEAN CONFIGURATION
PRESS ALT: 20000 FT

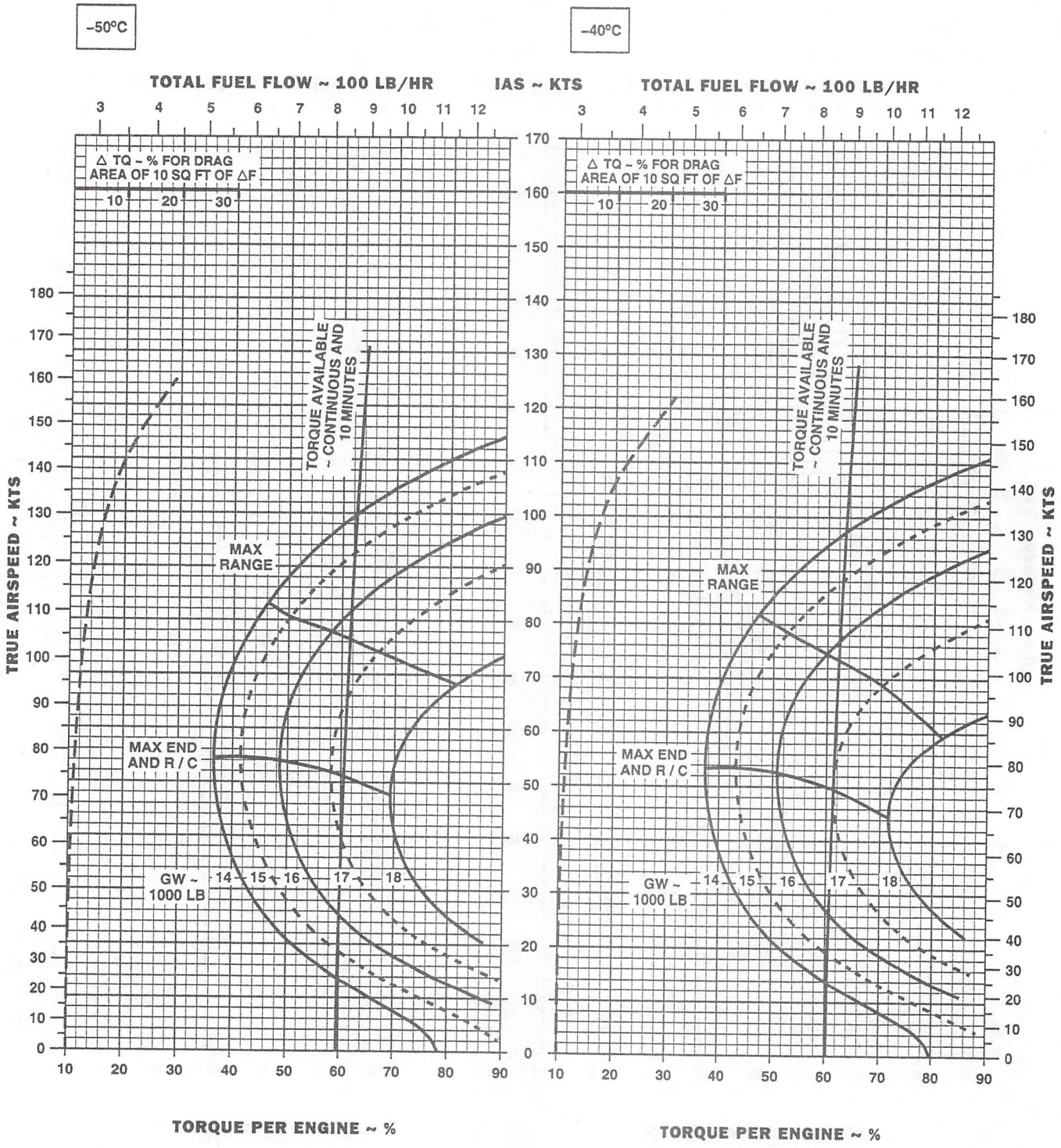

DATA BASIS: FLIGHT TEST

AK0298_1
SA

Figure 7-30. Cruise - Pressure Altitude 20,000 Feet - Clean (Sheet 1 of 3)

CRUISE

CLEAN CONFIGURATION
PRESS ALT: 20000 FT

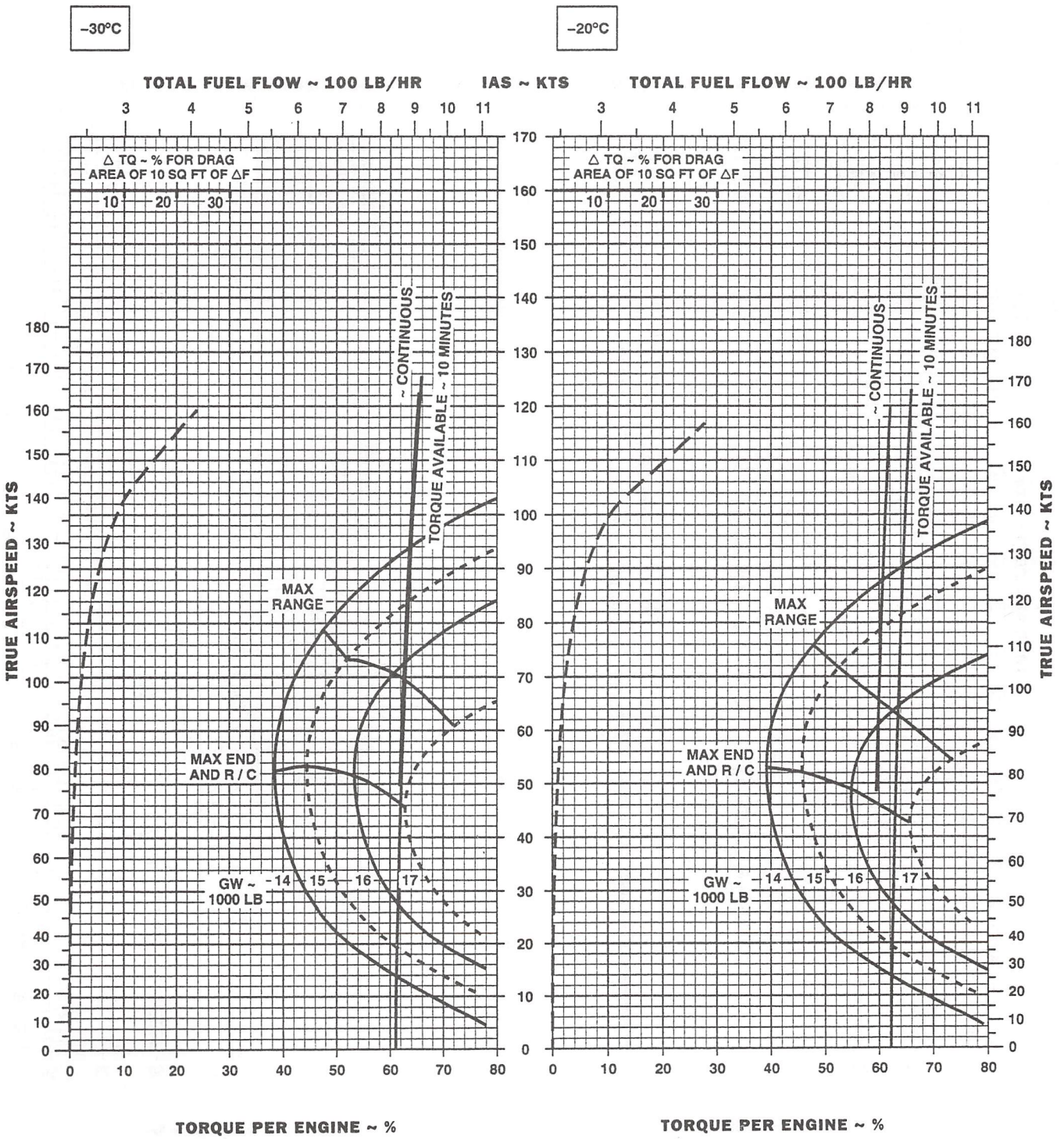

DATA BASIS: FLIGHT TEST

AK0298_2
SA

Figure 7-30. Cruise - Pressure Altitude 20,000 Feet - Clean (Sheet 2 of 3)

CRUISE

CLEAN CONFIGURATION
PRESS ALT: 20000 FT

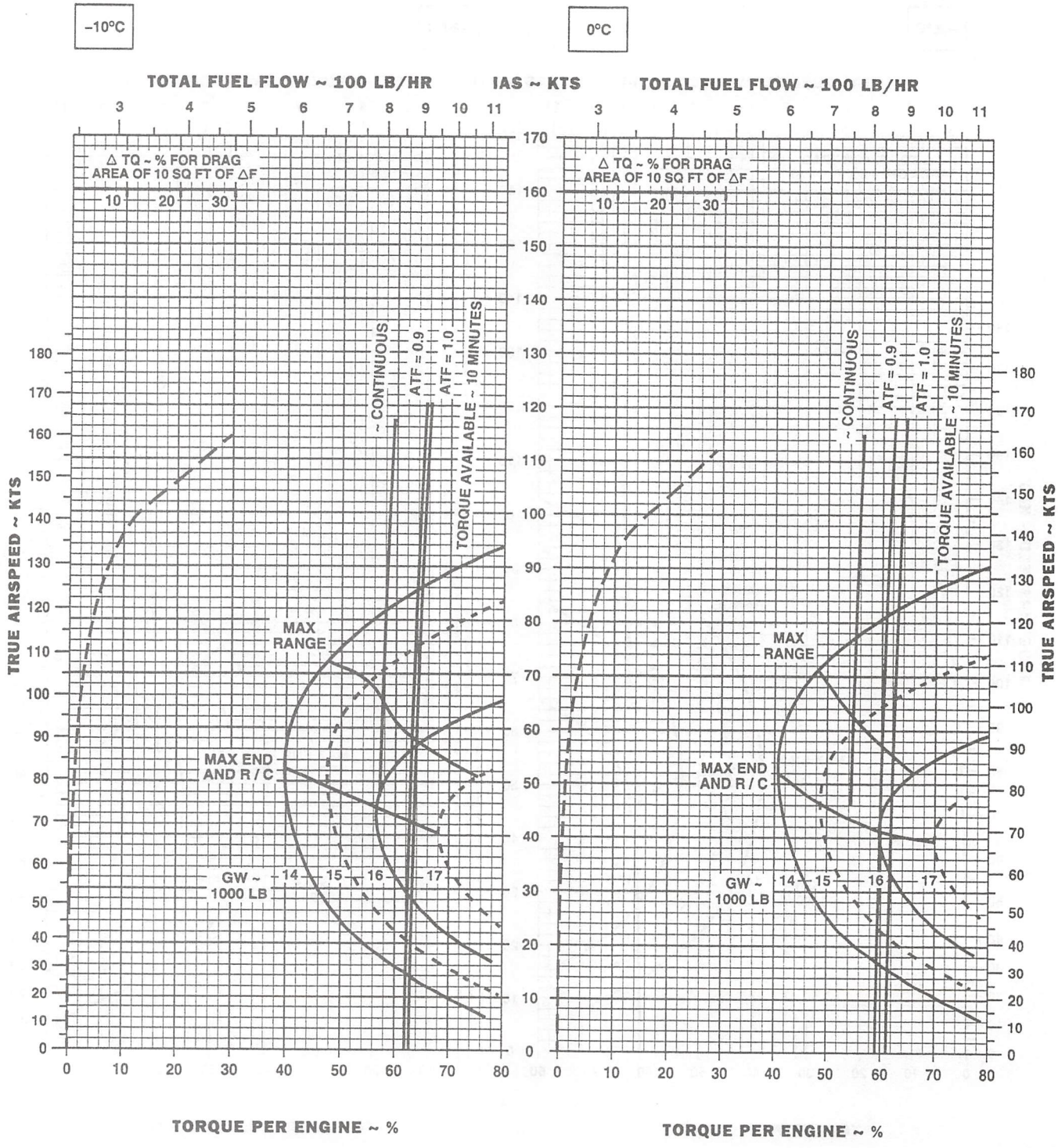

DATA BASIS: FLIGHT TEST

AK0298_3
SA

Figure 7-30. Cruise - Pressure Altitude 20,000 Feet - Clean (Sheet 3 of 3)

CRUISE

ETS INSTALLED

PRESS ALT: 20000 FT

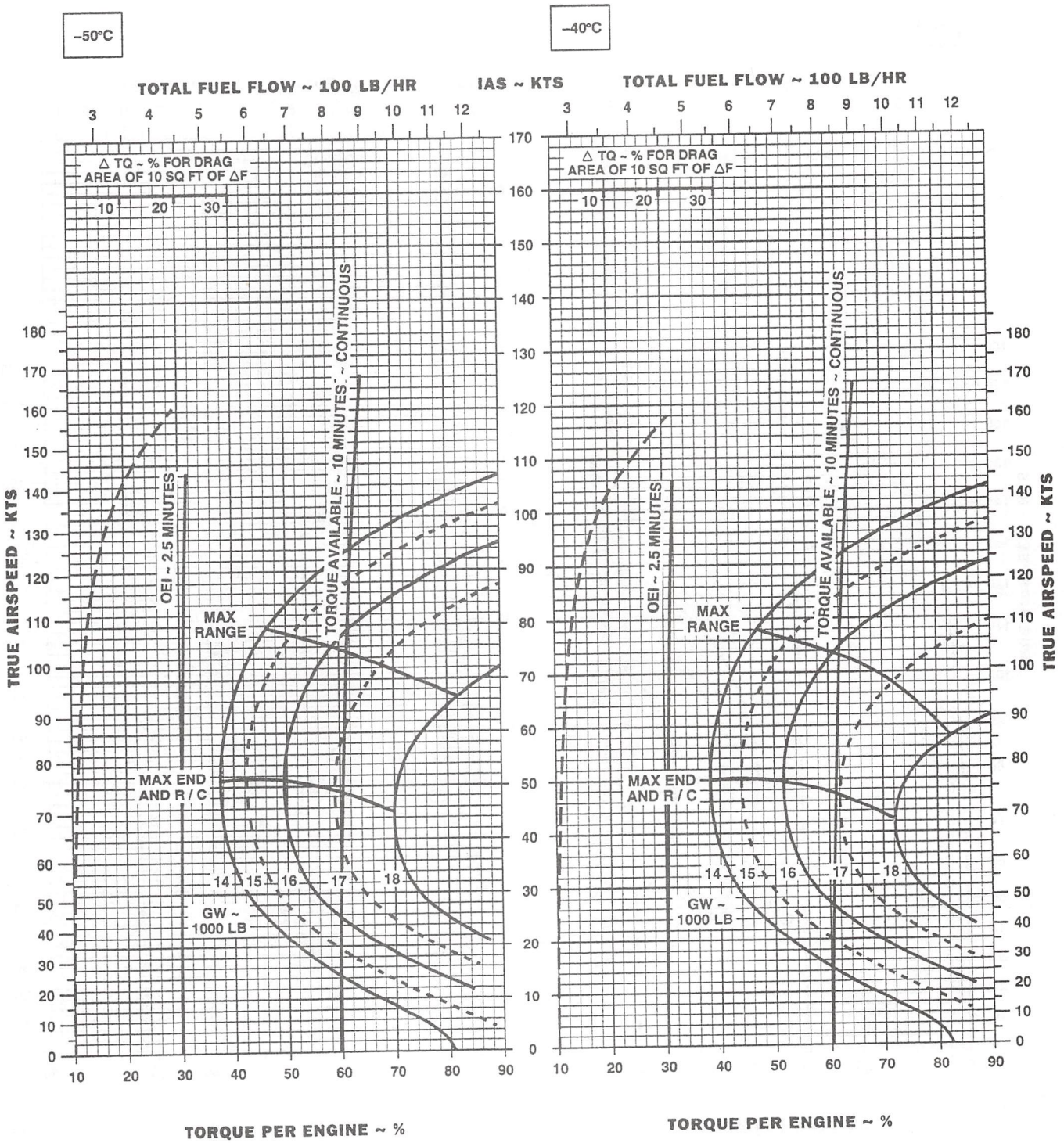

AK0936_1
SA

DATA BASIS: FLIGHT TEST

Figure 7-31. Cruise - Pressure Altitude 20,000 Feet - ETS Installed (Sheet 1 of 3)

CRUISE
ETS INSTALLED
PRESS ALT: 20000 FT

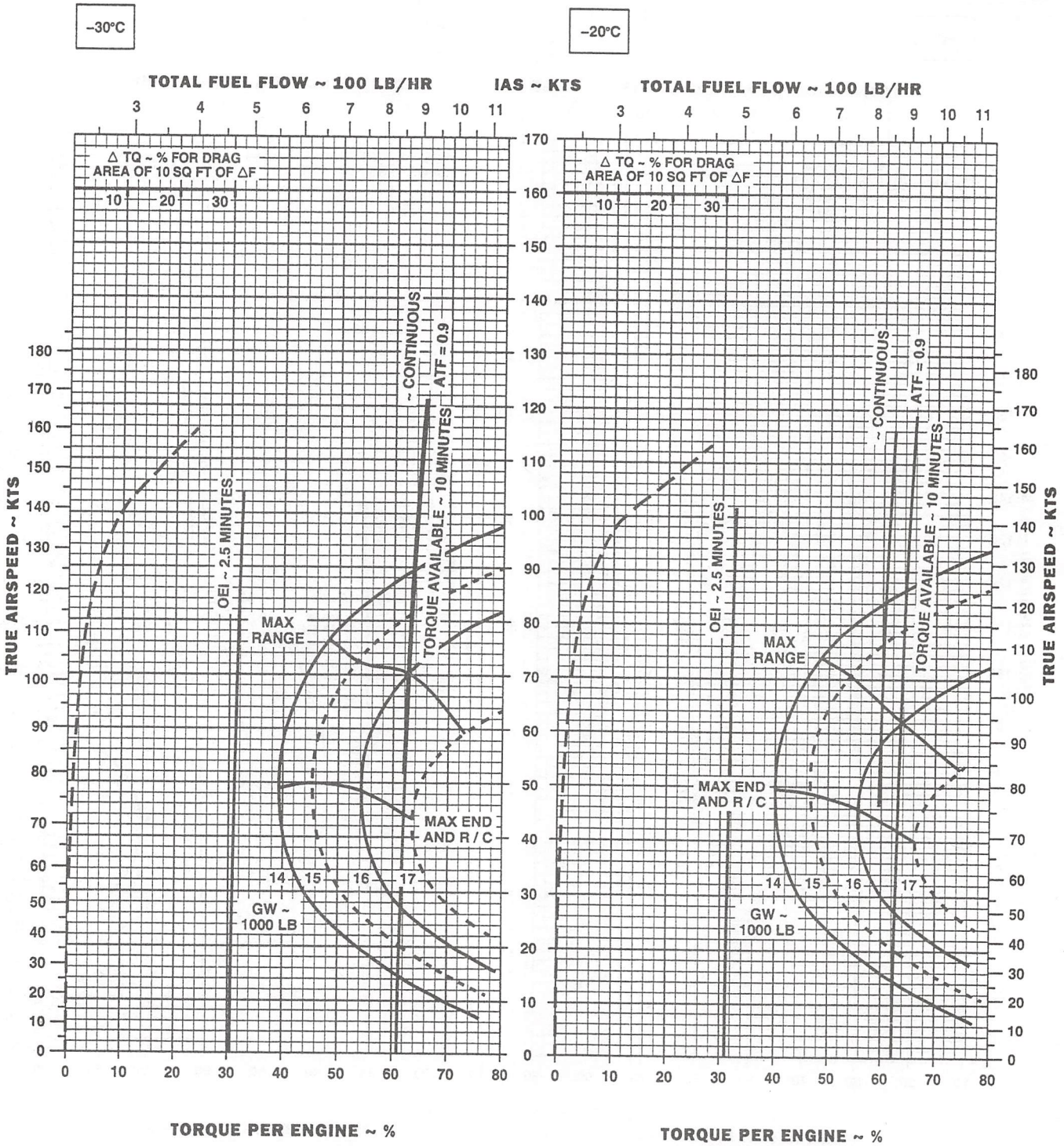

DATA BASIS: FLIGHT TEST

AK0936_2
SA

Figure 7-31. Cruise - Pressure Altitude 20,000 Feet - ETS Installed (Sheet 2 of 3)

CRUISE

ETS INSTALLED

PRESS ALT: 20000 FT

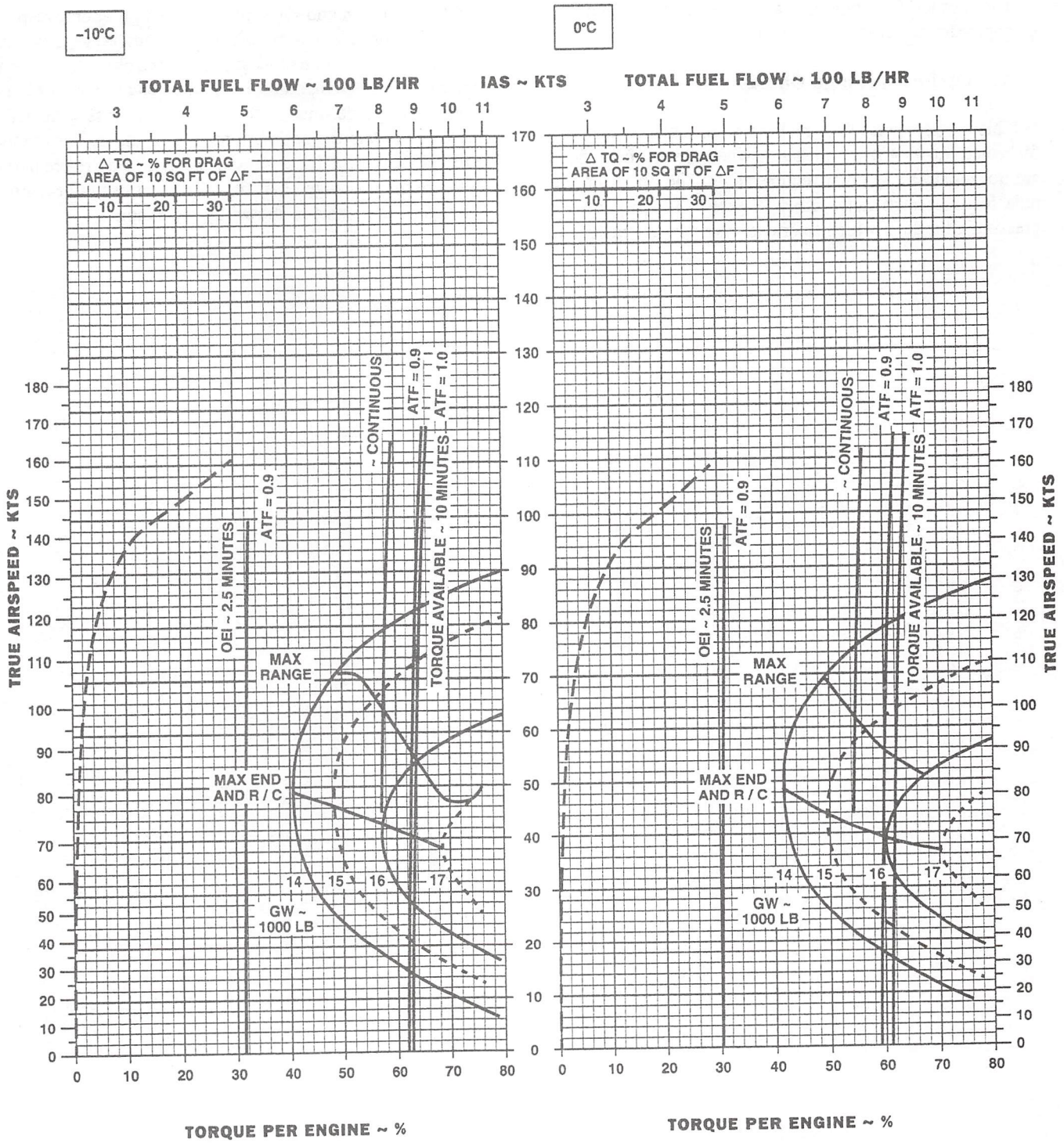

AK0936_3
SA

DATA BASIS: FLIGHT TEST

Figure 7-31. Cruise - Pressure Altitude 20,000 Feet - ETS Installed (Sheet 3 of 3)

Section VI OPTIMUM CRUISE

7-31. Optimum Range.

The altitude for optimum range for the helicopter may be approximated from Figure 7-32.

7-32. Optimum Range Charts.

This section presents a method to optimize cruise performance for long range missions when the altitudes flown are not restricted by other requirements. The optimum altitude for maximum range chart (Figure 7-32) provides the pressure altitude at which to cruise to obtain the maximum possible range for any gross weight and FAT conditions. Figure 7-32, sheets 1 and 2, present the optimum altitude data for the clean and ETS installed configurations, respectively. The altitude determined for optimum range may also be used for optimum endurance. Enter the chart at a current cruise or takeoff temperature condition and move along the temperature guide lines to the anticipated gross weight for cruise and obtain the optimum pressure altitude. Turn to the cruise chart closest to the altitude and temperature predicted by the optimum range chart for specific cruise information. The use of this chart is shown by the example.

OPTIMUM ALTITUDE FOR MAXIMUM RANGE

CLEAN CONFIGURATION

HIRSS (BAFFLES INSTALLED) 100% NR

EXAMPLE:

WANTED:

CRUISE ALTITUDE FOR OPTIMUM RANGE AND CORRESPONDING CRUISE CHART FOR FLIGHT CONDITIONS

KNOWN:

REFERENCE CONDITIONS OF:
PRESSURE ALTITUDE = 1,500 FT
FAT = 24 °C
GROSS WEIGHT = 16,500 LB

METHOD:

ENTER CHART AT FAT (24 °C), MOVE RIGHT TO REFERENCE / OPTIMUM PRESSURE ALTITUDE (1,500 FT). MOVE PARALLEL WITH THE TEMPERATURE TREND LINES TO AIRCRAFT GROSS WEIGHT (16,500 LB). MOVE LEFT OR RIGHT PARALLELING THE TEMPERATURE TREND LINE TO NEAREST EVEN THOUSAND REFERENCE / OPTIMUM PRESSURE ALTITUDE LINE (12,000). MOVE LEFT TO FREE AIR TEMPERATURE LINE (3 °C), MOVE UP OR DOWN TO NEAREST TEN VALUE ON THE FREE AIR TEMPERATURE SCALE (0 °C).

SELECT CRUISE CHART WITH ALTITUDE AND TEMPERATURE DATA AT THE NEAREST REFERENCE / OPTIMUM PRESSURE ALTITUDE (12,000 FT) AND THE NEAREST TEN DEGREE FREE AIR TEMPERATURE (0 °C).

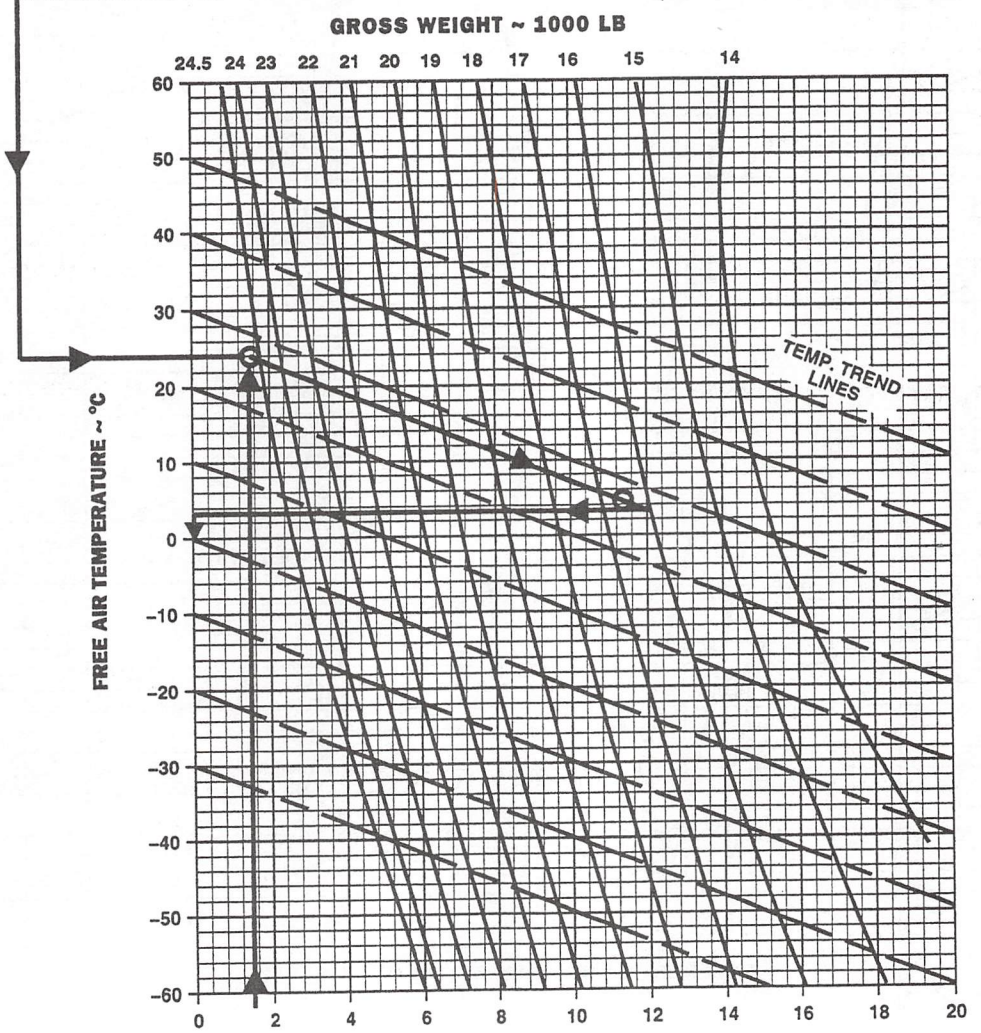

DATA BASIS: FLIGHT TEST

AK0299_1
SA

Figure 7-32. Optimum Altitude For Maximum Range (Sheet 1 of 2)

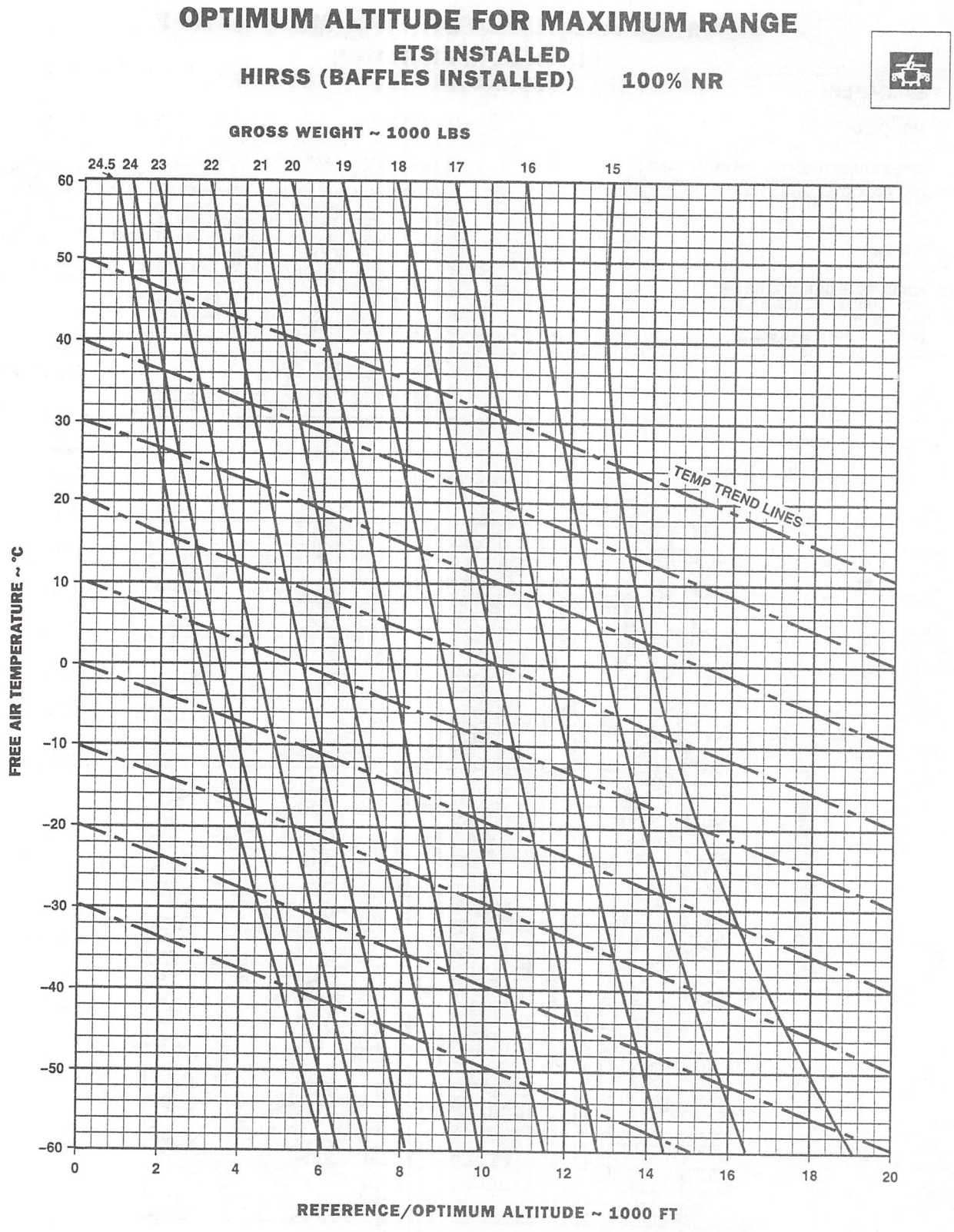

Figure 7-32. Optimum Altitude For Maximum Range (Sheet 2 of 2)

Section VII DRAG

7-33. External Load Drag Chart.

The general shapes of typical external loads are shown on Figure 7-33 as a function of the load frontal area. The frontal area is combined with the typical drag coefficient of the general shapes to obtain a drag multiplying factor for use with the 10-square-foot drag scale on each cruise chart. The Δ TQ% value obtained from the cruise chart is multiplied by the drag multiplying factor and added to indicated torque to obtain total torque required at any airspeed.

7-34. Aircraft Configuration Drag Changes.

When external equipment or configuration differs from the baseline configuration as defined in Section I, a drag correction should be made similarly to the external drag load method. Typical configuration changes that have drag areas established from flight test or analysis along with their drag multiplying factor are listed below in Table 7-1.

Table 7-1. Aircraft Configuration Drag Changes Used with Cruise Charts

ITEM	CHANGE IN FLAT PLATE DRAG AREA Δ F SQ FT	DRAG MULTIPLYING FACTOR
1. Both cargo doors open	6.0	0.60
2. Cargo doors removed	4.0	0.40
3. Fuel probe removed	-0.7	-0.07
4. Cockpit doors removed and cargo doors open entry	12.0	1.20
5. External tanks removed from ETS configuration	-2.0	-0.20
6. Chaff and flare dispensers removed	-0.64	-0.064
7. IR jammer removed	-0.43	-0.043
8. FLIR TFU removed	-1.0	-0.10
9. Rescue hoist removed	-0.82	-0.082

EXTERNAL DRAG LOAD

EXAMPLE

WANTED:

DRAG MULTIPLYING FACTOR
DUE TO EXTERNAL LOAD

KNOWN:

SHAPE OF EXTERNAL
LOAD = CYLINDER
FRONTAL AREA OF
EXTERNAL LOAD = 80 SQ FT

METHOD:

ENTER CHART AT SYMBOL
FOR CYLINDER
MOVE RIGHT TO 80 SQ FT.
MOVE DOWN AND READ
DRAG MULTIPLYING FACTOR
= 4.5

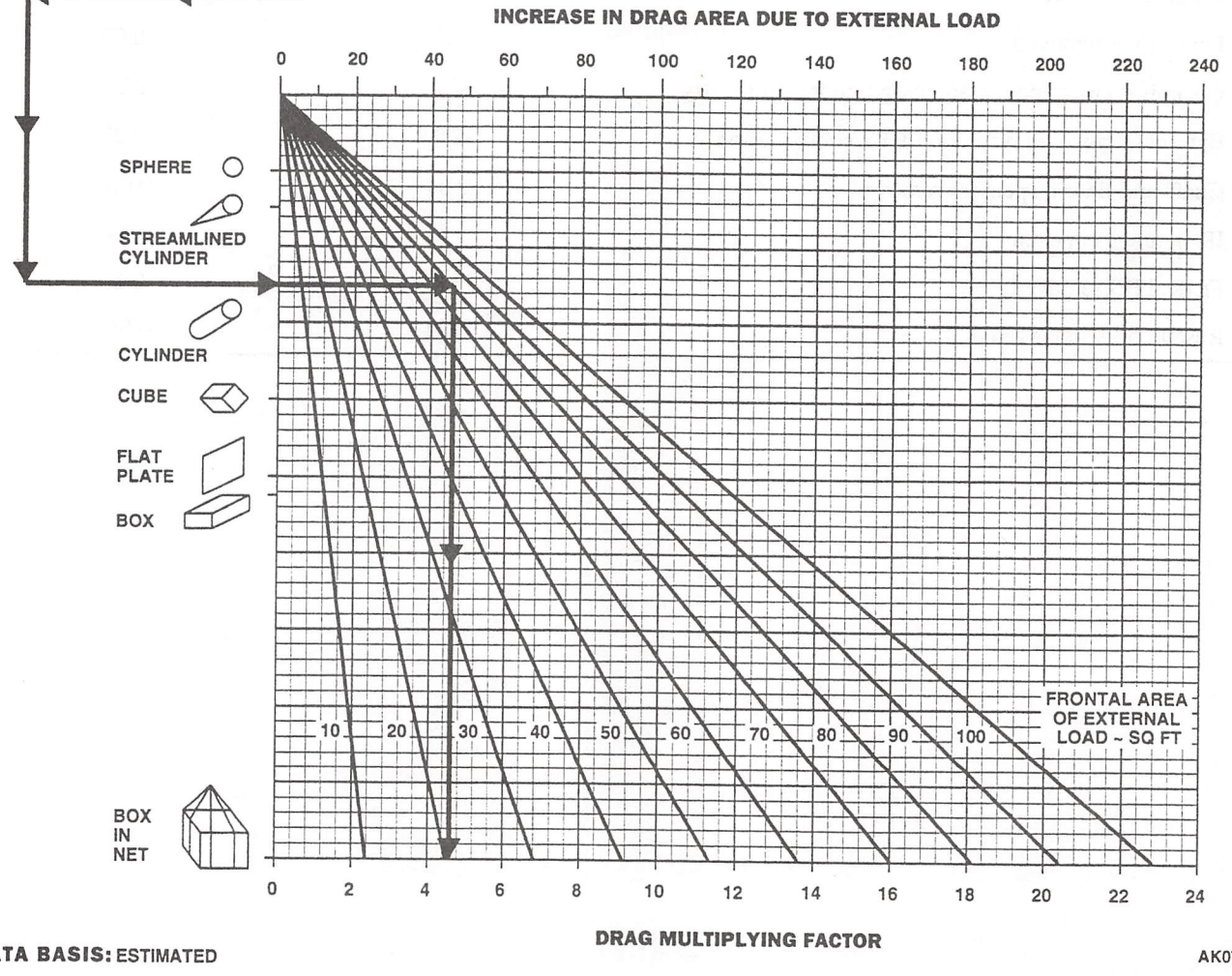

DATA BASIS: ESTIMATED

AK0781
SA

Figure 7-33. External Load Drag

Section VIII CLIMB/DESCENT

7-35. Climb Performance Chart.

The CLIMB chart (Figure 7-34) presents the time, fuel required, and distance traveled to climb from sea level to various cruise altitudes using dual engine (30-minute limit) power available as limited by torque. The climb data are based on maintaining 80 KIAS for clean configuration and 70 KIAS for the ETS installed configuration which approximates the airspeed for maximum R/C in average flight conditions. If a more exact airspeed is required, the actual indicated airspeed for maximum R/C may be obtained from the cruise charts and corrected to indicated airspeed in a climb as shown in Section X. The actual indicated airspeed for maximum R/C will result in somewhat better climb capability and higher service ceilings. Warmup and takeoff fuel used are not included on this chart. The use of this chart is shown by the example.

7-36. Climb/Descent Chart.

The CLIMB/DESCENT charts (Figure 7-35) presents the rate of climb or descent resulting from an increase or decrease of engine torque from the value required for level flight above 40 KIAS for both clean and ETS installed configurations, respectively. The data are presented at 100% NR for various gross weights. The charts may also be used in reverse to obtain the torque increase or reduction required to achieve a desired steady rate of climb or descent. The maximum R/C may be determined by subtracting the cruise chart torque required for maximum torque available at the desired flight conditions. Then enter the difference on the torque increase scale of the climb chart, move up to the gross weight, and read the resulting maximum R/C.

CLIMB

30-MINUTE LIMIT 100% NR

HIRSS INSTALLED ATF=0.9 DUAL ENGINE

EXAMPLE

WANTED:

TIME TO CLIMB FUEL USED DISTANCE REQUIRED TO CLIMB FROM 2,000 TO 12,000 FEET

KNOWN:

GROSS WEIGHT = 17,000 POUNDS

FAT AT 2,000 FEET = 14°C

METHOD:

USING STANDARD LAPSE RATE, FAT AT 12,000 FEET IS -6°. AVERAGE TEMPERATURE IS:

AVG FAT = (14°C - 6°C) ÷ 2 = 4°C

A. ENTER CHART AT 17,000 POUNDS GROSS WEIGHT..... (A) , MOVE RIGHT TO 12,000 FEET, THEN DOWN TO 4°C ON THE TIME TO CLIMB, FUEL USED, AND DISTANCE TRAVELED GRAPHS. MOVE LEFT TO READ 5.5 MINUTES FOR TIME TO CLIMB, 125 POUNDS FOR FUEL USED, AND 7.5 NAUTICAL MILES FOR DISTANCE TRAVELED TO CLIMB FROM SEA LEVEL TO 12,000 FEET.

B. ENTER CHART AT 17,000 POUNDS GROSS WEIGHT..... (A) , MOVE RIGHT TO 2,000 FEET, THEN DOWN TO 4°C ON THE TIME TO CLIMB, FUEL USED, AND DISTANCE TRAVELED GRAPHS. MOVE LEFT TO READ 1.5 MINUTES FOR TIME TO CLIMB, 20 POUNDS FOR FUEL USED, AND 1.5 NAUTICAL MILES FOR DISTANCE TRAVELED TO CLIMB FROM SEA LEVEL TO 2,000 FEET.

C. SUBTRACT DATA OBTAINED IN STEP B FROM DATA OBTAINED IN STEP A. THE DIFFERENCE IS 4 MINUTES FOR TIME TO CLIMB, 105 POUNDS OF FUEL USED, AND 5 NAUTICAL MILES FOR DISTANCE TRAVELED FOR A CLIMB STARTING AS 2,000 FEET AND ENDING AT 12,000 FEET.

Figure 7-34. Climb - 2 Engine, ATF=0.9 (Sheet 1 of 3)

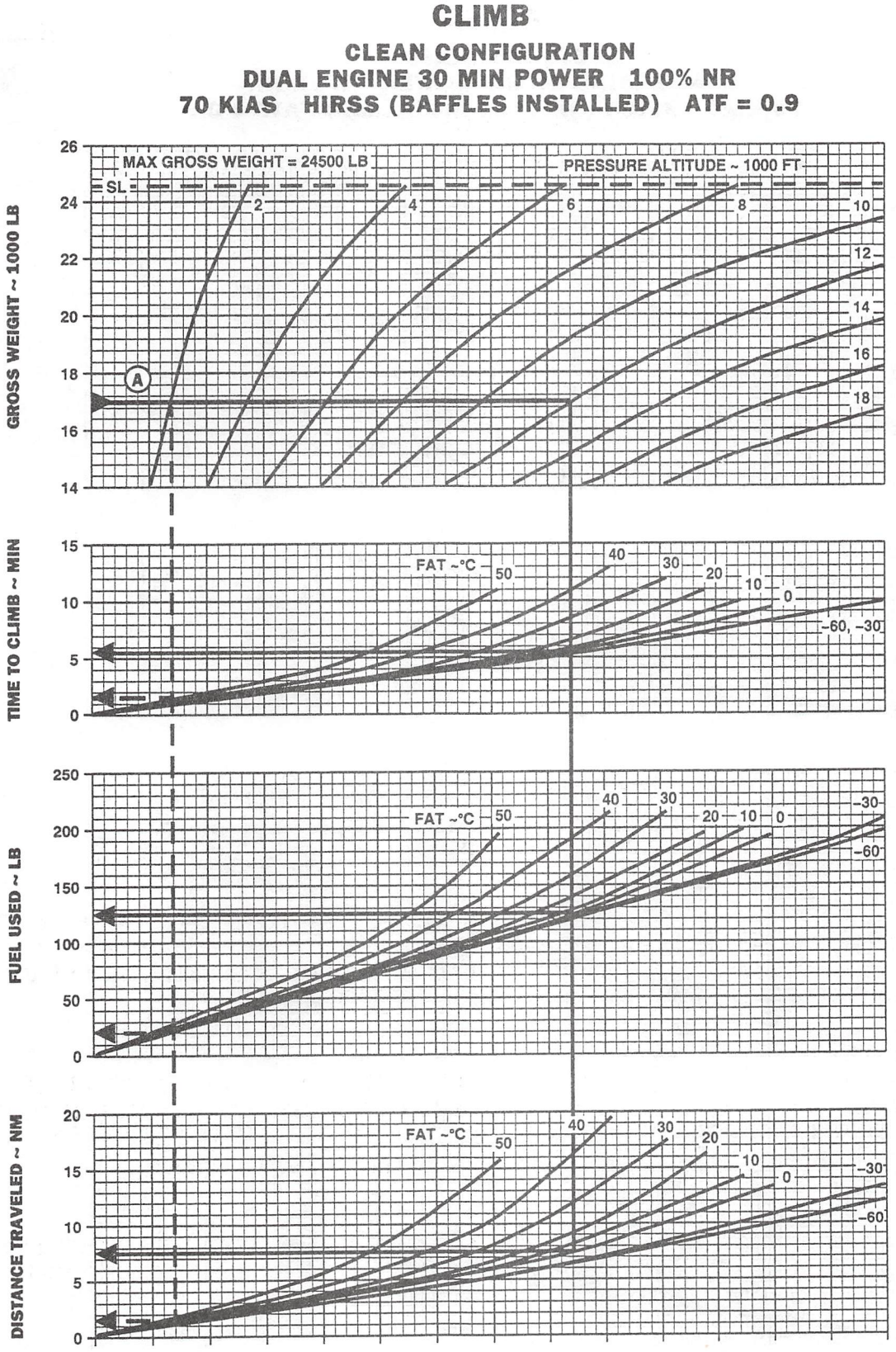

Figure 7-34. Climb - 2 Engine, ATF=0.9 (Sheet 2 of 3)

CLIMB

ETS INSTALLED
DUAL ENGINE 30 MIN POWER 100% NR
70 KIAS HIRSS (BAFFLES INSTALLED) ATF = 0.9

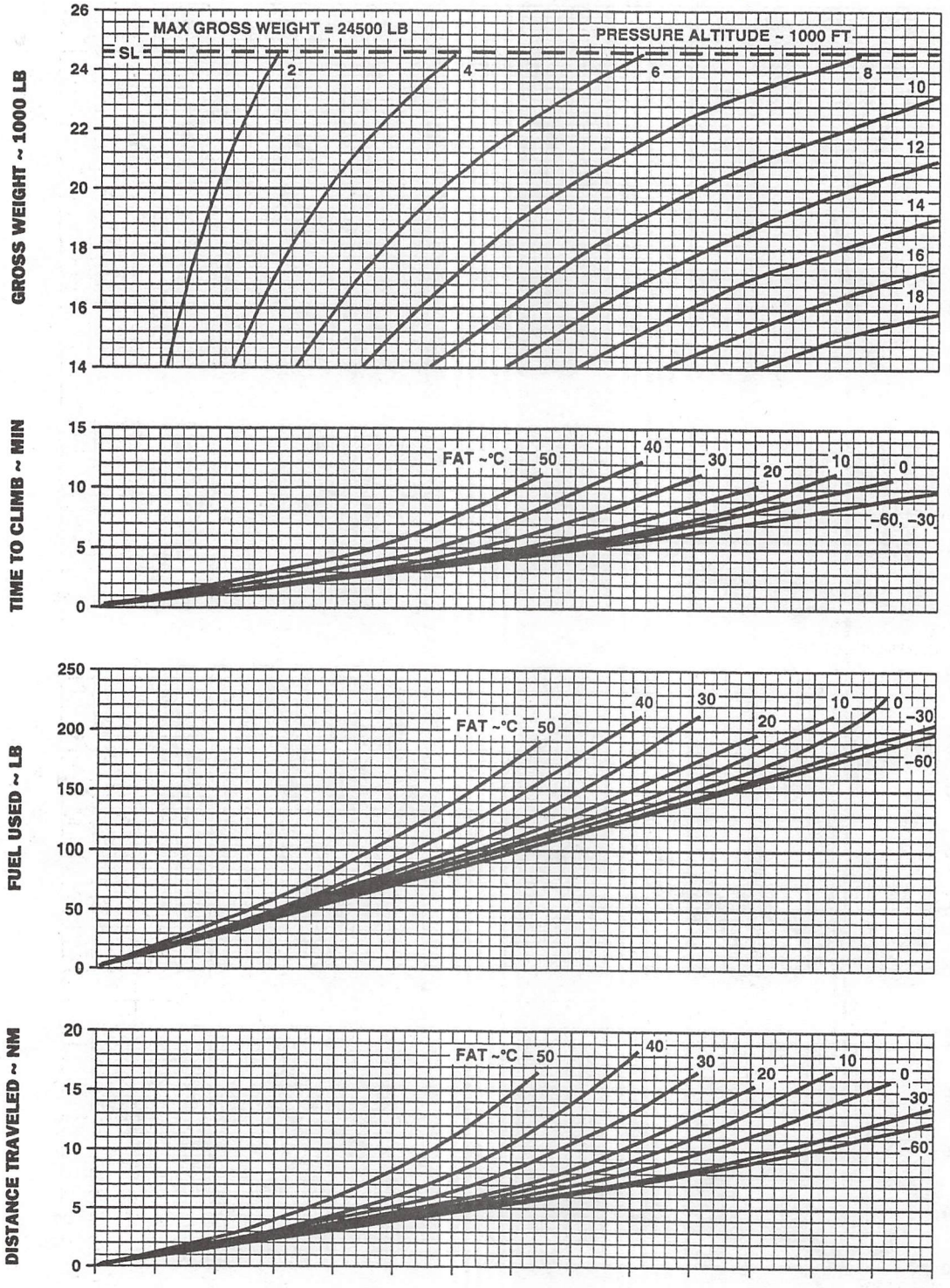

DATA BASIS: FLIGHT TEST

AK0300_2
SA

Figure 7-34. Climb - 2 Engine, ATF=0.9 (Sheet 3 of 3)

CLIMB/DESCENT

100% NR CLEAN CONFIGURATION

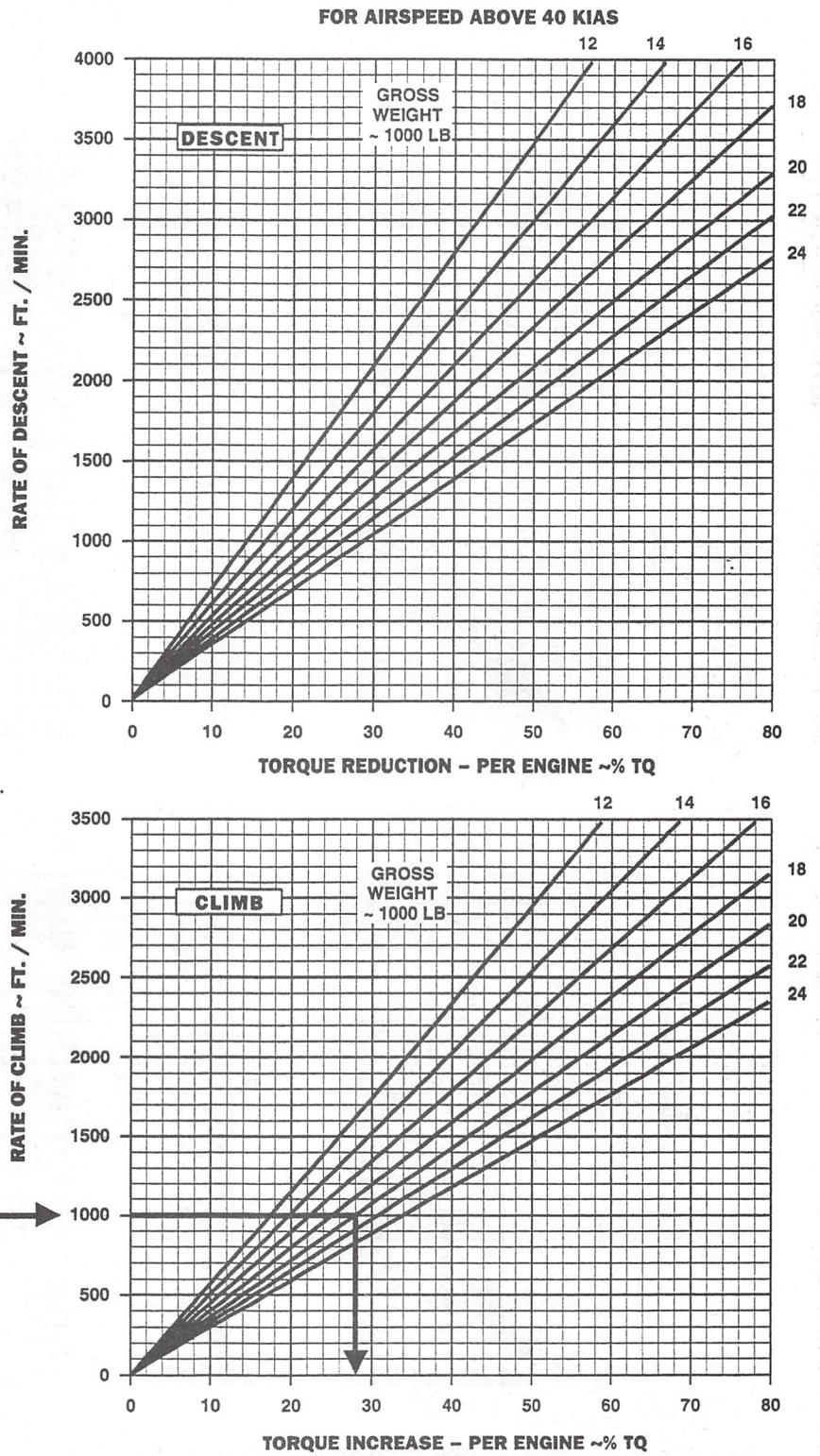

EXAMPLE

WANTED:

INDICATED TORQUE CHANGE FOR DESIRED RATE-OF-CLIMB OR DESCENT.

KNOWN:

GROSS WEIGHT = 20,000 POUNDS
DESIRED RATE = 1000 FEET PER MINUTE.

METHOD:

ENTER AT 1000 FT / M IN
MOVE RIGHT TO 20,000 LB
MOVE DOWN READ TQ
INCREASE = 28%

DATA BASIS: FLIGHT TEST

AK0301_1 SA

Figure 7-35. Climb/Descent (Sheet 1 of 2)

CLIMB/DESCENT

ETS INSTALLED
FOR AIRSPEED ABOVE 40 KIAS
100% NR

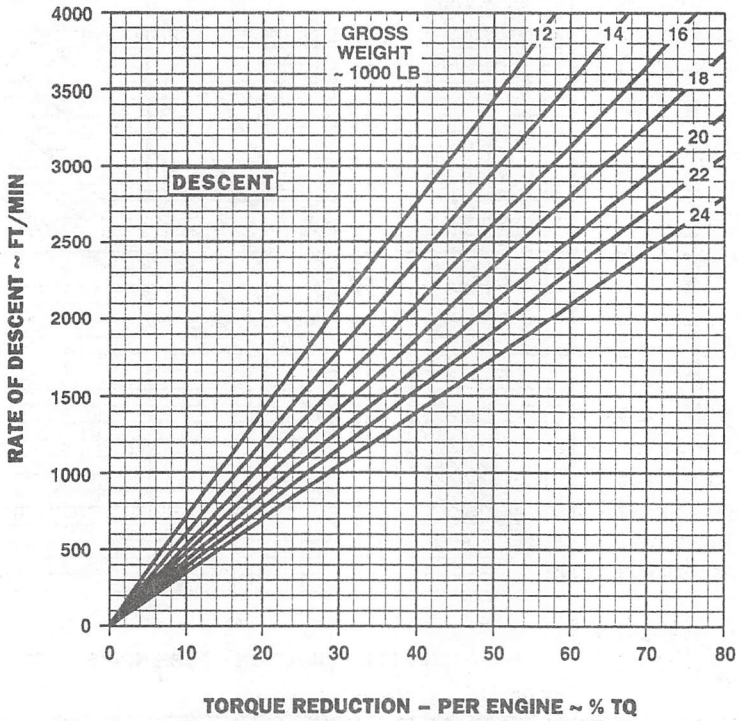

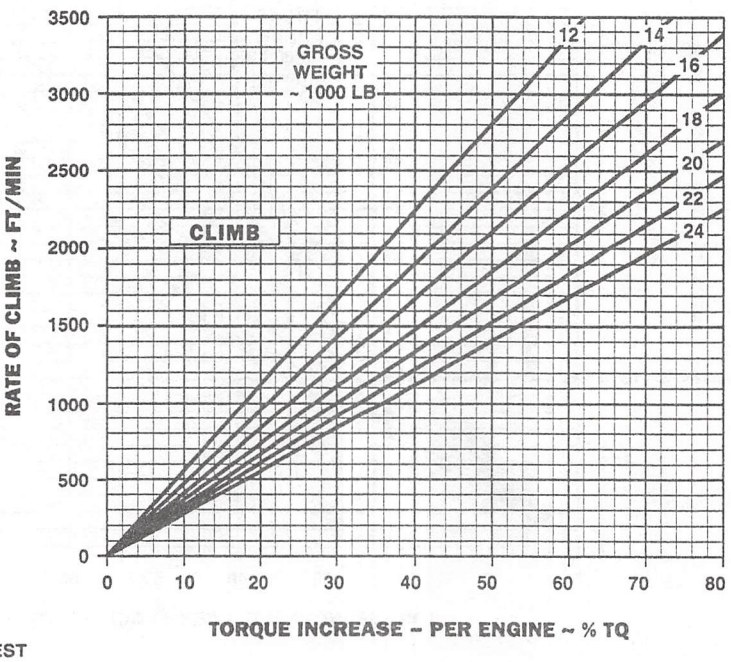

DATA BASIS: FLIGHT TEST

AK0301_2
SA

Figure 7-35. Climb/Descent (Sheet 2 of 2)

Section IX FUEL FLOW

7-37. Idle Fuel Flow.

Dual engine idle fuel flow is presented as a function of altitude at 0°C FAT in Table 7-2. The data are based on operation at 63% to 71% NG for idle and 79% to 88% for flat pitch (collective full down) at 100% NR. Fuel flow for APU is also presented for a nominal load of 80% maximum power as a function of altitude and 0°C FAT for general planning.

7-38. Single Engine Fuel Flow.

Engine fuel flow is presented in Figure 7-36 for various torque and pressure altitudes at a baseline FAT of 0°C with engine bleed air extraction off. When operating at other than 0°C FAT, engine fuel flow is increased 1% for each 20°C above the baseline temperature, and decreased 1% for each 20°C below the baseline temperature. To determine single engine fuel flow during cruise, enter the fuel flow chart at double the torque required for dual engine cruise as determined from the cruise charts and obtain fuel flow from the single engine scale. The single engine torque may not exceed the transmission limit shown on the chart. With bleed air extracted, fuel flow increases as follows:

1. Engine anti-ice on: 50 pounds per hour.
2. Cockpit heater on: 6 pounds per hour.
3. When the IR suppressor system is operating in the benign mode (exhaust baffles removed), the fuel flow will decrease about 7 pounds per hour.

7-39. Dual Engine Fuel Flow.

Dual engine fuel flow may be obtained from Figure 7-36 when each engine is indicating approximately the same torque by averaging the indicated torques and reading fuel flow from the dual engine fuel flow scale. When operating at other than the 0°C FAT baseline, dual engine fuel flow is increased 1% for each 20°C above baseline and is decreased 1% for each 20°C below baseline temperature. With bleed air extracted, dual engine fuel flow increases as follows:

1. Engine anti-ice on: 100 pounds per hour.
2. Cockpit heater on: 12 pounds per hour.
3. When the IR suppressor system is operating in the benign mode (exhaust baffles removed), the fuel flow decreases about 14 pounds per hour.

Table 7-2. Idle Fuel Flow

PRESSURE ALTITUDE FEET	NG = 63-71% GROUND IDLE (66% NR) LB/HR	NG = 79-88% FLAT PITCH (100% NR) LB/HR	APU (NOMINAL) LB/HR
0	360	590	120
4,000	310	515	105
8,000	280	445	90
12,000	250	400	75
16,000	220	340	65
20,000	185	280	55

SINGLE/DUAL ENGINE FUEL FLOW

HIRSS (BAFFLES INSTALLED) BLEED AIR OFF
100% NR FAT=°C

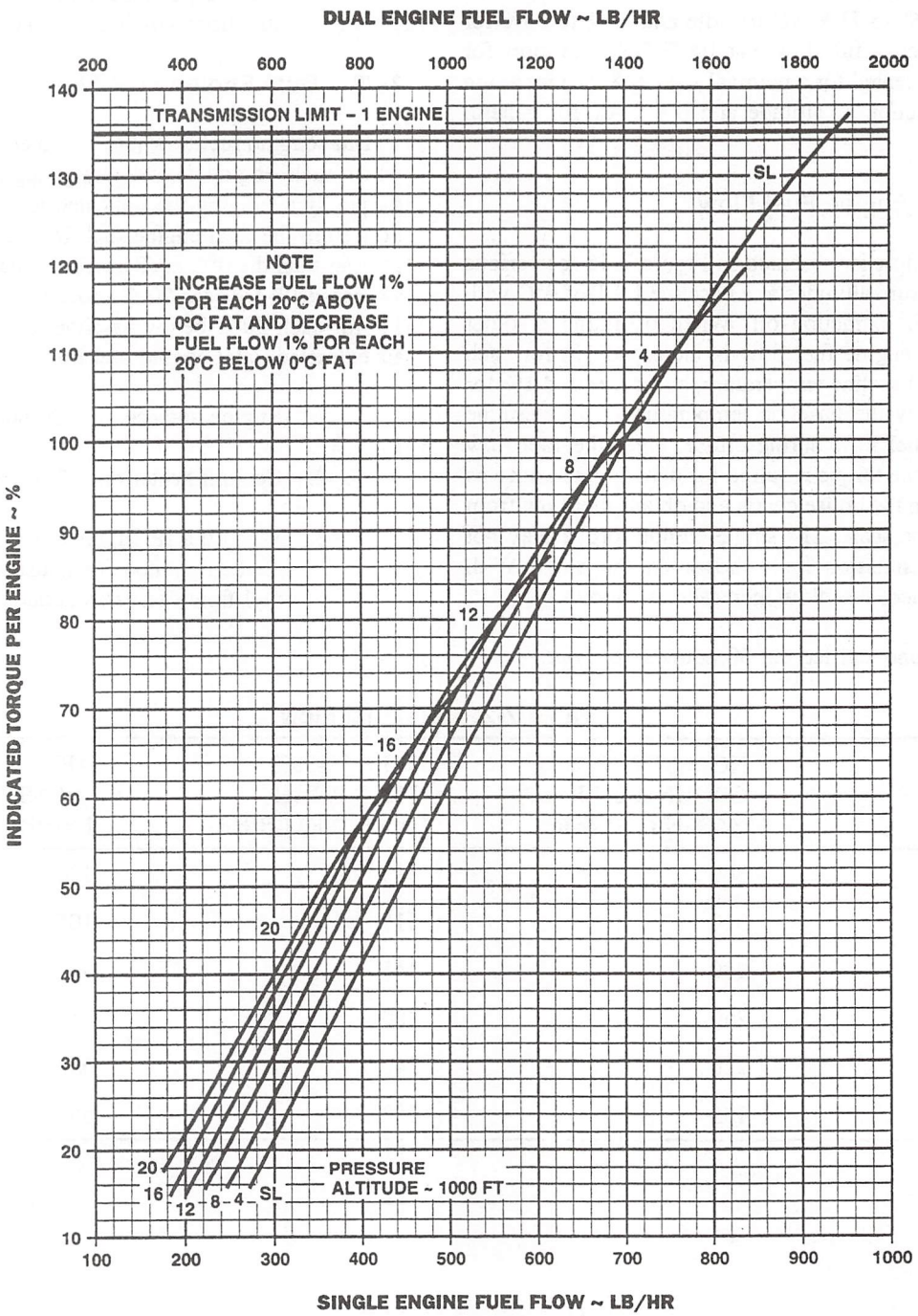

DATA BASIS:
ENGINE MANUFACTURER'S SPEC.

AK0366
SA

Figure 7-36. Single/Dual Engine Fuel Flow

Section X AIRSPEED SYSTEM CHARACTERISTICS

7-40. Airspeed System Description.

Refer to paragraph 2-211, Pitot-Static System, for those systems in which airspeed data are provided by the Pitot-static system.

7-41. Airspeed Correction Charts.

All indicated airspeeds shown on the cruise charts are based on level flight calibrations for either clean or ETS installed configuration. Figure 7-37 provides the airspeed correction to be added to the cruise chart indicated airspeed value to determine the related airspeed indicator reading with ETS installed or removed, respectively. There are relatively large variations in airspeed system error associated with climbs and descents. These errors are significant and this data is provided primarily to show the general magnitude and direction of the errors associated with the various flight modes. If desired, these figures may be used in the manner shown by the examples to calculate specific airspeed corrections.

7-42. Airspeed System Dynamic Characteristics.

The dynamic characteristics of the airspeed indicating systems are normally satisfactory. However, the following anomalies in the airspeed indicating system may be observed during the following maneuvers or conditions:

a. During takeoffs, in the speed range of 40 to 80 KIAS, 5 to 10 KIAS airspeed fluctuation may be observed on the MFD and back-up airspeed indicators.

b. Power changes in high power, low airspeed climbs may cause as much as 30 knot airspeed changes in indicated airspeed. Increase in power causes increase in indicated airspeed, and a decrease in power causes decrease in indicated airspeed.

c. The MFD and back-up airspeed indicators may be unreliable during high power climbs at low airspeeds (less than 50 KIAS) with the copilot system reading as much as 30 knots lower than the pilot system.

AIRSPEED SYSTEM CORRECTION
CLEAN CONFIGURATION

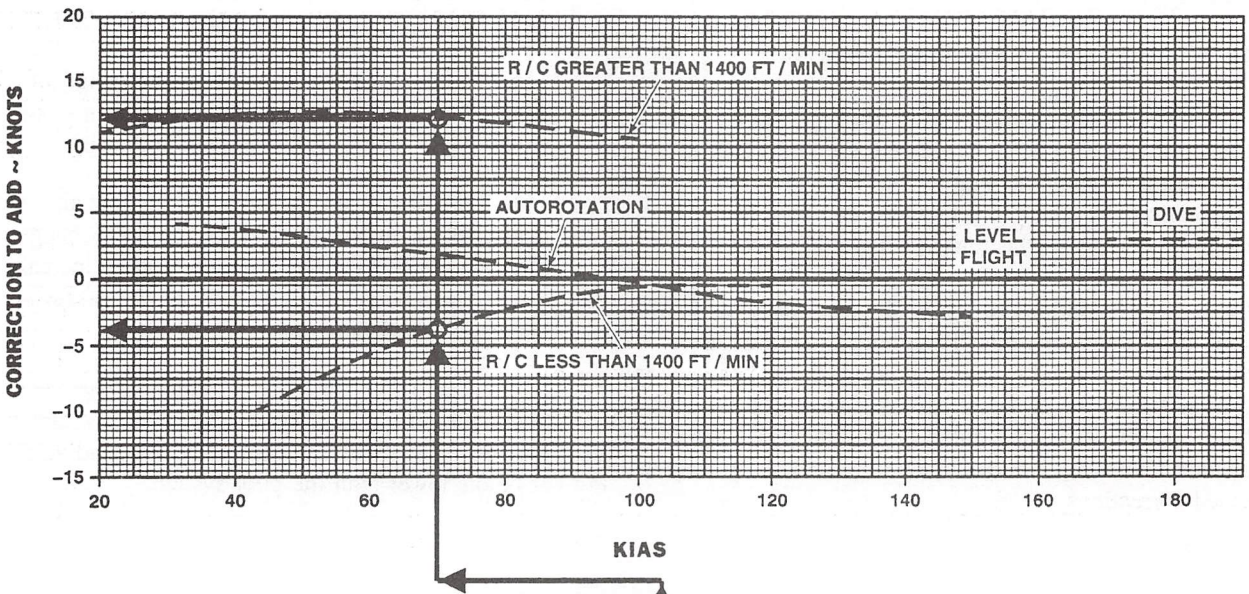

EXAMPLE

WANTED:
INDICATED AIRSPEED TO OBTAIN
MAXIMUM RATE OF CLIMB

KNOWN:
70 KIAS MAX END / AND R / C FROM
APPROPRIATE CRUISE CHART FOR
A GIVEN PRESSURE ALTITUDE, FAT,
AND GROSS WEIGHT

METHOD:
ENTER AT KNOWN IAS FROM CLEAN CONFIGURATION
CRUISE CHART, MOVE UP TO R / C GREATER
THAN 1,400 FPM, MOVE LEFT READ CORRECTION
TO ADD TO IAS = +12.5 KTS, RE–ENTER
AT KNOWN IAS FROM CRUISE CHART, MOVE UP
TO R / C LESS THAN 1,400 FPM LINE, MOVE LEFT,
READ CORRECTION TO ADD TO IAS = –4 KTS
CALCULATE IAS FOR MAX R / C WHEN:

FOR R / C GREATER THAN 1,400 FPM, AIRSPEED = 70 KIAS +12.5 KIAS = 82.5 KIAS

FOR R / C LESS THAN 1,400 FPM, AIRSPEED = 70 KIAS –4 KIAS = 66 KIAS

DATA BASIS: FLIGHT TEST

AK0302_1
SA

Figure 7-37. Airspeed Correction (Sheet 1 of 2)

AIRSPEED SYSTEM CORRECTION

ETS INSTALLED

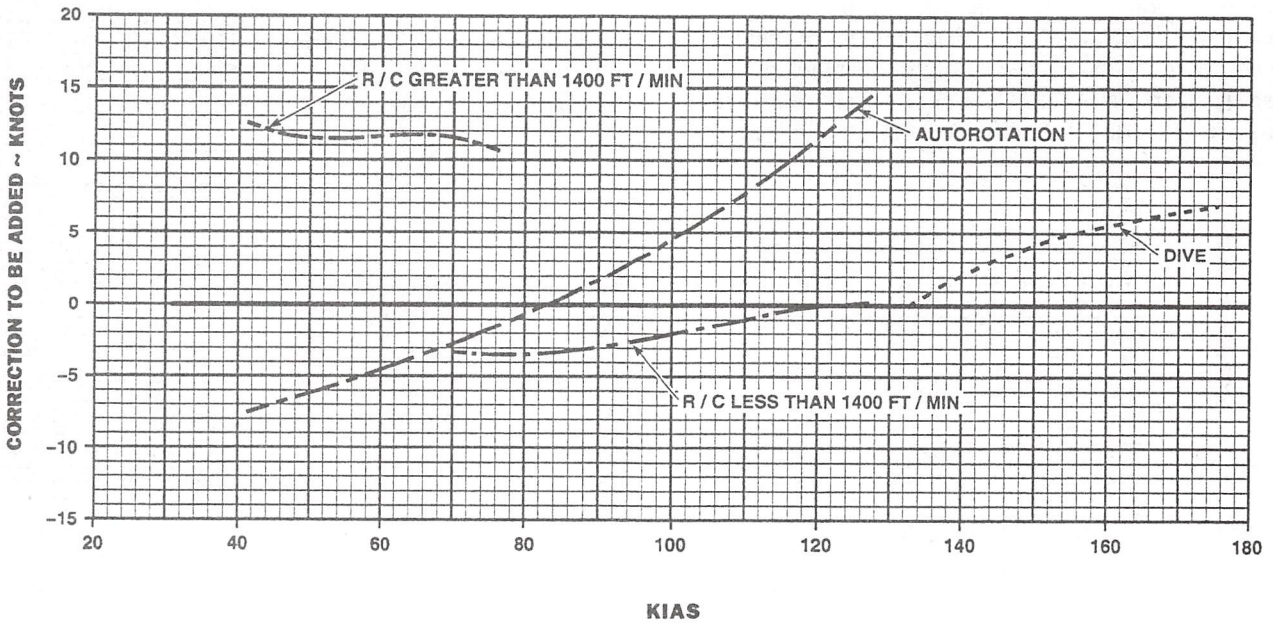

DATA BASIS: FLIGHT TEST

AK0302_2
SA

Figure 7-37. Airspeed Correction (Sheet 2 of 2)

Section XI AERIAL REFUELING

7-43. Aerial Refueling Envelope.

The aerial refueling capability in both the clean and ETS installed configurations is defined for both ATF 1.0 and ATF 0.9 Figure 7-38. These charts may be used to determine the amount of fuel that may be transferred or the maximum altitude at which a fixed amount of fuel may be loaded while maintaining level flight capability at the same airspeed in free air. Select the cruise chart nearest the required refueling flight conditions to determine excess power available and fuel flow information. Power required with the fuel drogue attached has been observed to be lower by about 12 to 15% TQ, than that required to maintain level flight in free air with the drogue detached. These charts were derived to maintain the preferred airspeed for the Air Force refueling tankers, which results in holding 115 KIAS in the clean configuration and 110 KIAS with ETS installed. Airspeeds above 115 KIAS will reduce fuel transfer or altitude capability.

EXAMPLE

WANTED:

A. MAXIMUM FUEL TRANSFER FOR AERIAL REFUELING USING CONTINUOUS POWER

B. MAXIMUM REFUELING PRESSURE ALTITUDE TO TRANSFER 4000 POUNDS OF FUEL

KNOWN:

A. FAT = 10°C
PRESSURE ALTITUDE = 8,000 FEET
GROSS WEIGHT = 17,000 POUNDS
KIAS = 115

METHOD:

A. ENTER CHART AT KNOWN PRESSURE ALTITUDE (8,000FT), MOVE RIGHT TO FAT LINE (10°C), MOVE DOWN AND READ MAXIMUM GROSS WEIGHT TO MAINTAIN LEVEL FLIGHT AT 20,300 POUNDS. MAXIMUM FUEL TRANSFER CALCULATION: 20,300 - 17,000 = 3,300 POUNDS.

B. NEW GROSS WEIGHT CALCULATION: 17,000 + 4,000 = 21,000 POUNDS. ENTER CHART AT NEW GROSS WEIGHT (21,000 POUNDS), MOVE UP TO ESTIMATED FAT (10°C). MOVE LEFT AND READ MAXIMUM PRESSURE ALTITUDE OF 7,400 FEET.

Figure 7-38. Refueling Envelope (Sheet 1 of 5)

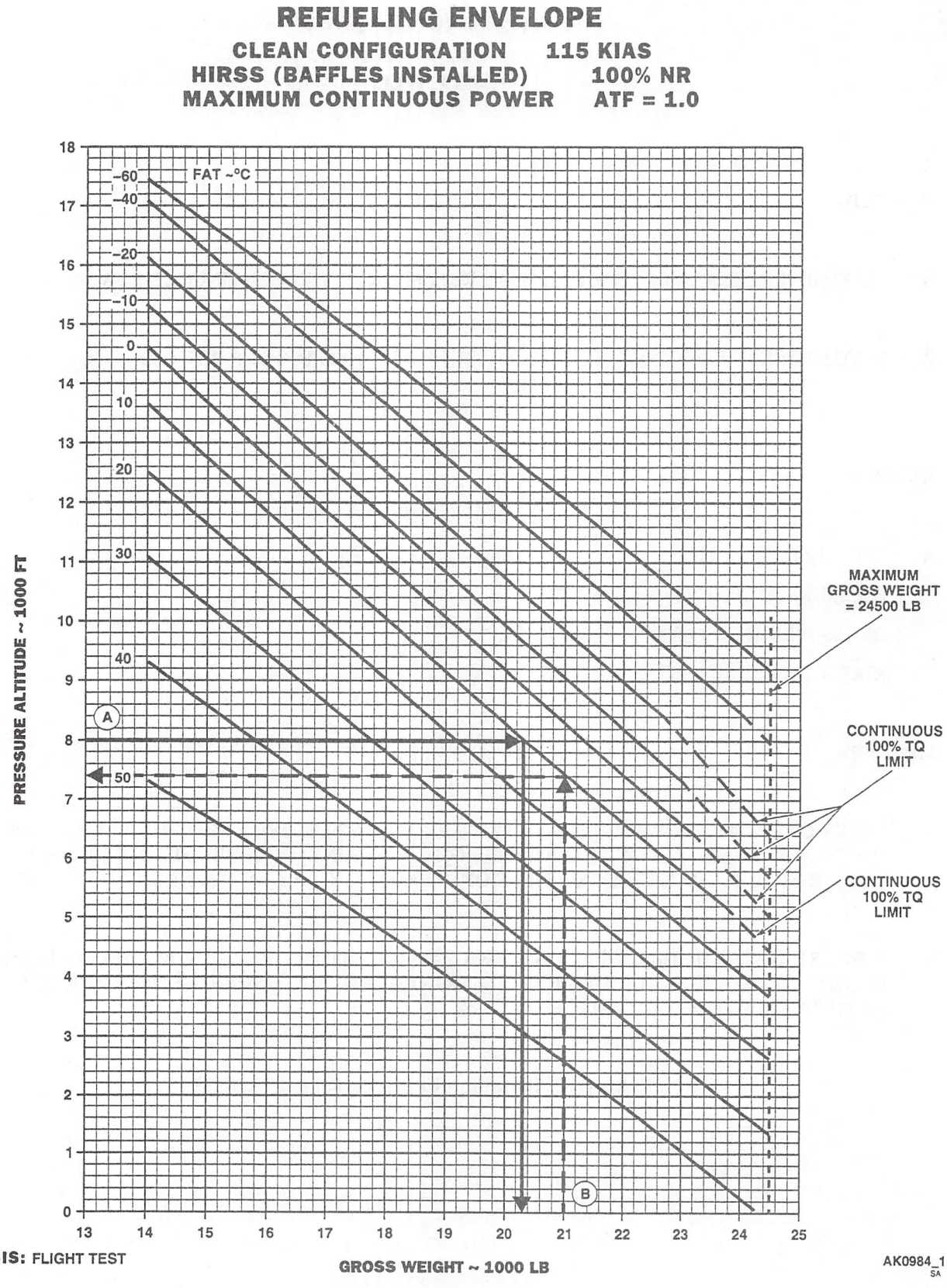

Figure 7-38. Refueling Envelope (Sheet 2 of 5)

REFUELING ENVELOPE

CLEAN CONFIGURATION 115 KIAS
HIRSS (BAFFLES INSTALLED) 100 % NR
MAXIMUM CONTINUOUS POWER ATF = 0.9

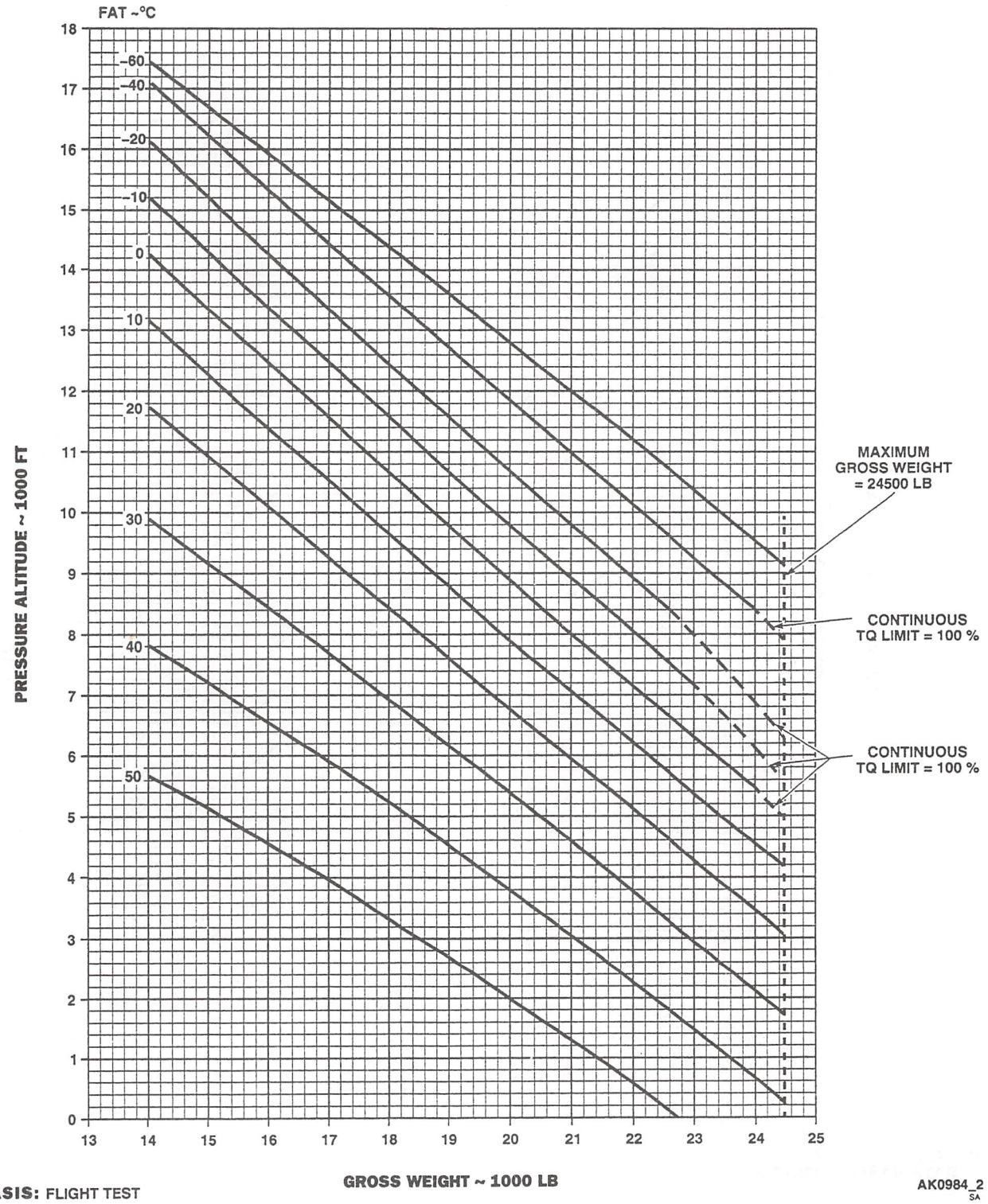

DATA BASIS: FLIGHT TEST

AK0984_2 SA

Figure 7-38. Refueling Envelope (Sheet 3 of 5)

REFUELING ENVELOPE

ETS INSTALLED 110 KIAS
HIRSS (BAFFLES INSTALLED) 100%
MAXIMUM CONTINUOUS POWER ATF = 1.0

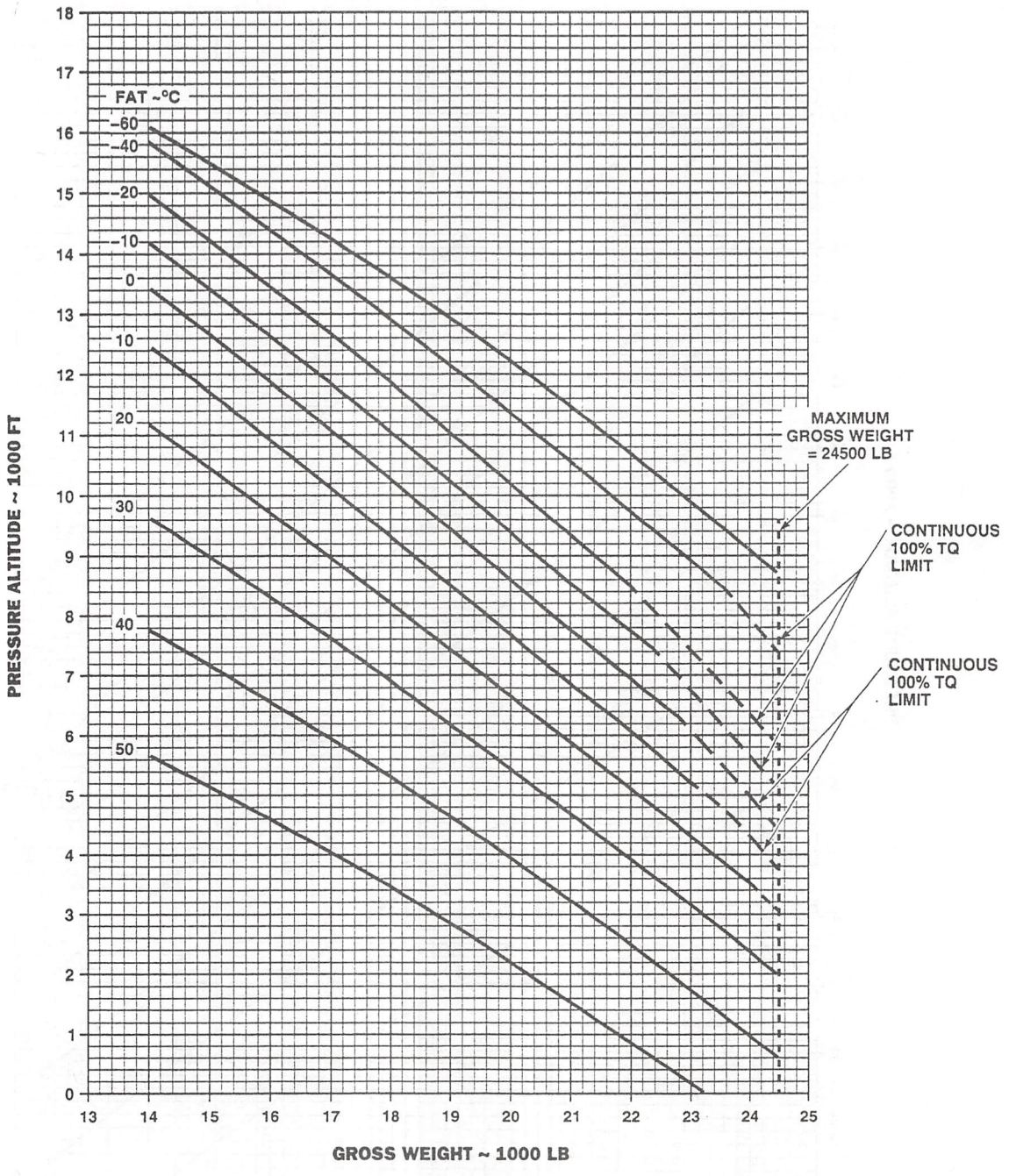

DATA BASIS: FLIGHT TEST

AK0984_3
SA

Figure 7-38. Refueling Envelope (Sheet 4 of 5)

REFUELING ENVELOPE

ETS INSTALLED 110 KIAS
HIRSS (BAFFLES INSTALLED) 100% NR
MAXIMUM CONTINUOUS POWER ATF = 0.9

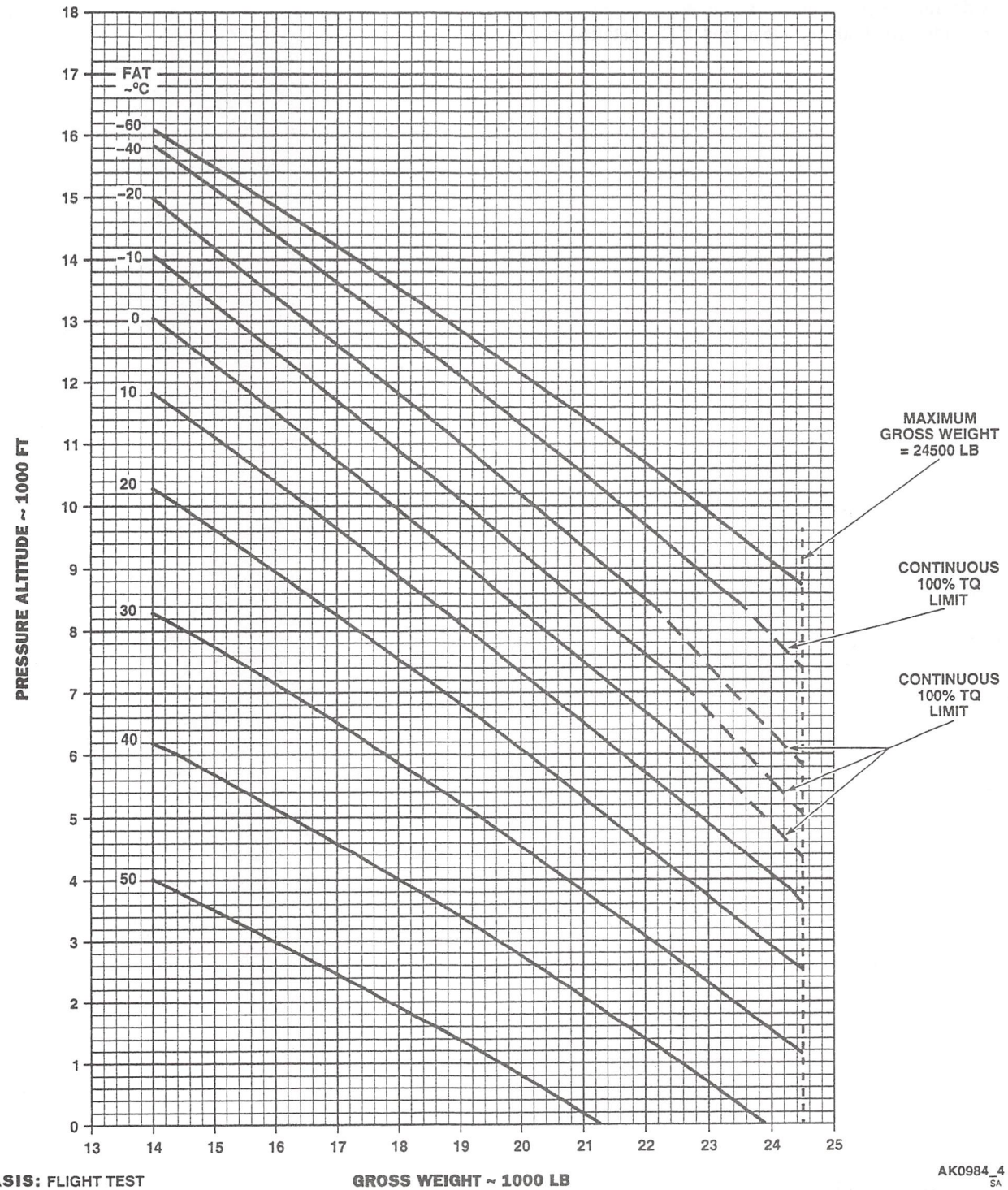

DATA BASIS: FLIGHT TEST

AK0984_4
SA

Figure 7-38. Refueling Envelope (Sheet 5 of 5)

Section XII SINGLE ENGINE SERVICE CEILING

7-44. Single Engine Service Ceiling.

Single engine service ceiling charts (Figure 7-39) provide altitude limits during single engine operation. Data is provided for both the clean and ETS installed configuration. These charts may be used to determine the maximum altitude at which the aircraft can maintain 100 feet-per-minute rate of climb under OEI conditions.

SINGLE ENGINE SERVICE CEILING 70 KIAS

CLEAN CONFIGURATION
HIRSS (BAFFLES INSTALLED) ATF = 1.0 100% NR
CONTINGENCY POWER (2.5 MIN LIMIT) OR 135% TRANSMISSION LIMIT

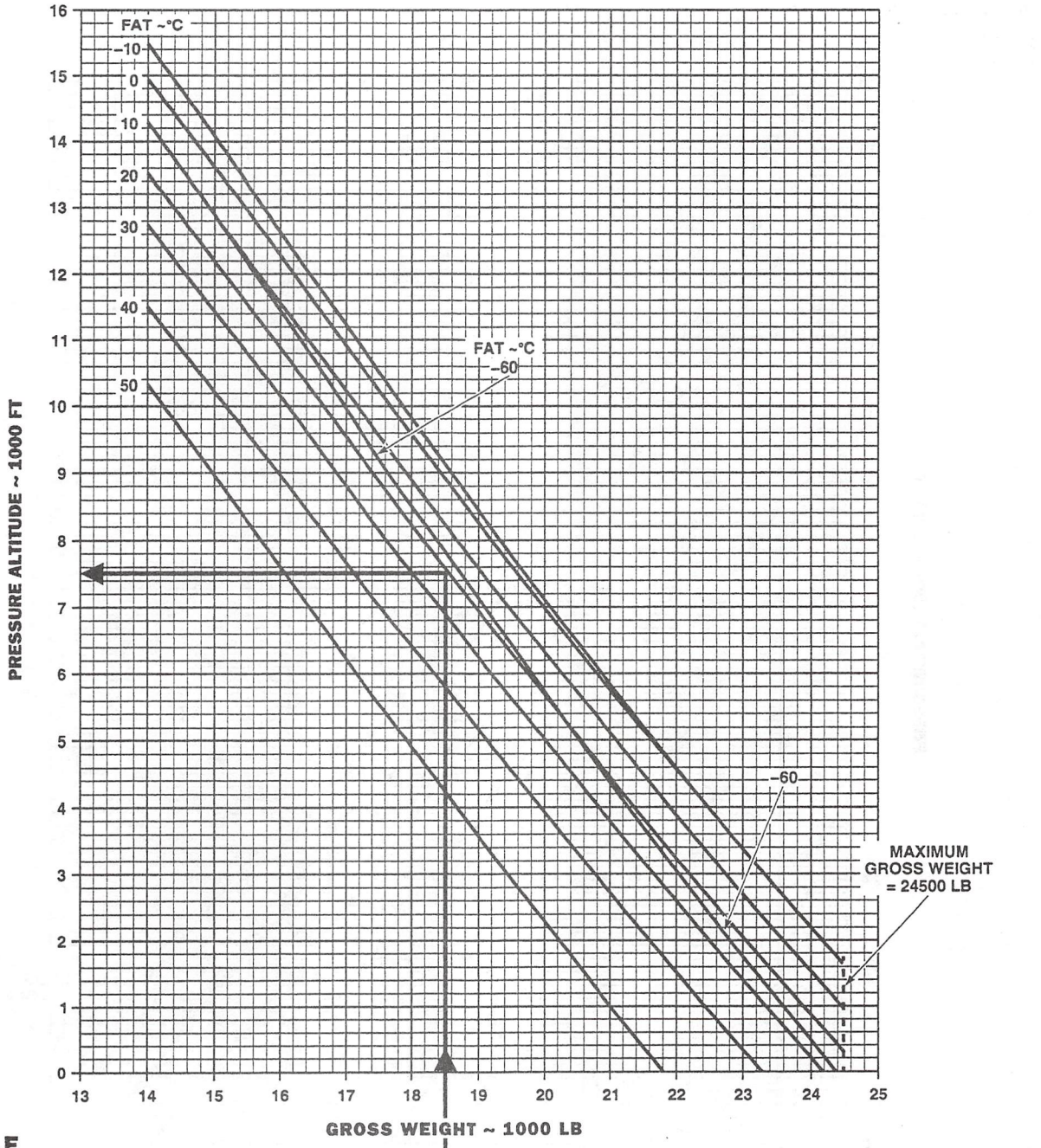

EXAMPLE

WANTED:

MAXIMUM PRESSURE ALTITUDE DURING SINGLE ENGINE OPERATION AT 70 KIAS

KNOWN:

FAT = 20 °C
GROSS WEIGHT = 18,500 POUNDS
KIAS = 70

METHOD:

ENTER CHART AT KNOWN GROSS WEIGHT (18,500 LB), MOVE UP TO FAT LINE (20 °C), MOVE LEFT AND READ MAXIMUM PRESSURE ALTITUDE FOR SINGLE ENGINE OPERATION (7,500 FT).

DATA BASIS: FLIGHT TEST

AK0983_1
SA

Figure 7-39. Single Engine Service Ceiling (Sheet 1 of 2)

SINGLE ENGINE SERVICE CEILING 70 KIAS

CLEAN CONFIGURATION
HIRSS (BAFFLES INSTALLED) ATF = 0.9 100% NR
CONTINGENCY POWER (2.5 MIN LIMIT) OR 135% TRANSMISSION LIMIT

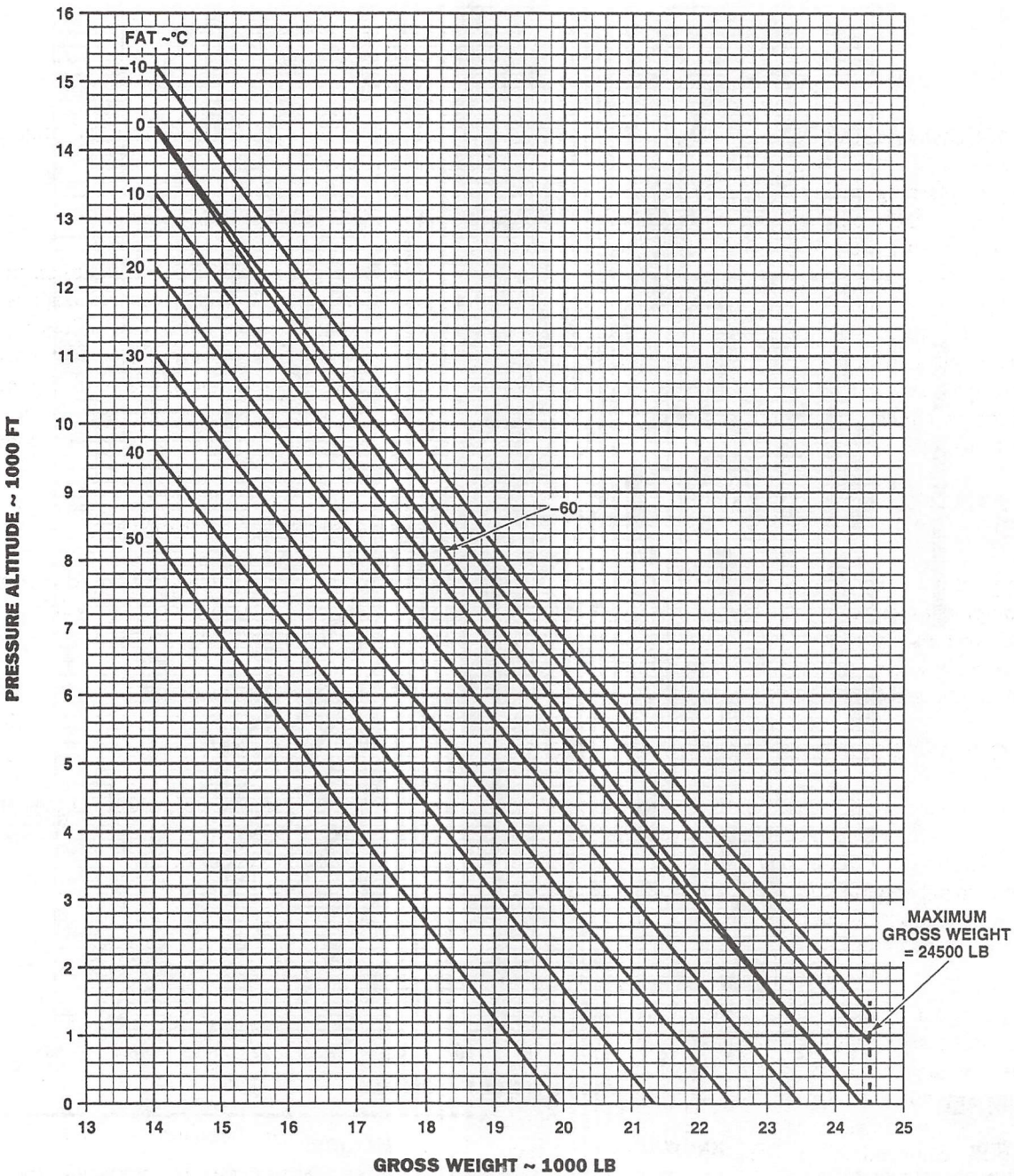

DATA BASIS: FLIGHT TEST

AK0983_2
SA

Figure 7-39. Single Engine Service Ceiling (Sheet 2 of 2)

CHAPTER 8
NORMAL PROCEDURES

Section I MISSION PLANNING

8-1. MISSION PLANNING.

Mission planning begins when the mission is assigned and extends to the preflight check of the helicopter. It includes, but is not limited to checks of operating limits and restrictions such as weight and balance, loading, performance, publications, flight plan, and crew and passenger briefings. The pilot in command shall ensure compliance with the contents of this manual that are applicable to the mission and that all aviation life support equipment required for the mission (e.g., helmets, gloves, survival vests, survival kits, etc.) is available.

8-2. AVIATION LIFE SUPPORT EQUIPMENT (ALSE).

The pilot in command shall ensure all aviation life support equipment required for mission (e.g., helmets, gloves, survival vests, survival kits, etc.) is on board and operational. Ensure items requiring inspection stamps/dates are current and all safety seals are present.

8-3. CREW DUTIES/RESPONSIBILITIES.

The minimum crew required to fly the helicopter is two pilots. Additional crewmembers, as required, may be added at the discretion of the commander. The manner in which each crewmember performs his related duties is the responsibility of the pilot in command.

a. The pilot in command is responsible for all aspects of mission planning, preflight, and operation of the helicopter. He will assign duties and functions to all other crewmembers as required. Prior to or during preflight, the pilot in command will brief the crew on items pertinent to the mission; e.g., performance data, monitoring of instruments, flight plan, communications, emergency procedures, taxi, and load operations.

b. The pilot in command must be familiar with pilot duties and the duties of the other crew positions. The copilot will assist the pilot as directed.

c. The crew chief will perform all duties as assigned by the pilot.

8-4. CREW BRIEFING.

A crew briefing shall be conducted to ensure a thorough understanding of individual and team responsibilities. The briefing should include, but is not limited to, pilots, crew chief, ground crew responsibilities, and the coordination necessary to complete the mission in the most efficient manner. A review of visual signals is desirable when ground guides do not have direct voice communications with the crew.

8-5. PASSENGER BRIEFING.

The following guide may be used in accomplishing required passenger briefings. Items that do not pertain to a specific mission may be omitted.

1. Crew introduction.
2. Equipment.
    a. Personal, to include ID tags.
    b. Professional.
    c. Survival.
3. Flight data.
    a. Route.
    b. Altitude.
    c. Time enroute.
    e. Weather.
4. Normal procedures.
    a. Entry and exit the helicopter.

b. Seating.

c. Seat belts.

d. Movement in helicopter.

e. Internal communications.

f. Security of equipment.

g. Smoking.

h. Oxygen.

i. Refueling.

j. Weapons.

k. Protective masks.

l. Parachutes.

m. Hearing protection.

n. Aviation life support equipment (ALSE).

5. Emergency procedures.

a. Emergency exits.

b. Emergency equipment.

c. Emergency landing/ditching procedures.

Section II OPERATING PROCEDURES AND MANEUVERS

8-6. OPERATING PROCEDURES AND MANEUVERS.

This section describes normal procedures and includes all steps necessary to ensure safe and efficient operation of the helicopter from the time a preflight begins until the flight is completed and the helicopter is parked and secured. Unique feel, characteristics, and reaction of the helicopter during various phases of operation and the techniques and procedures used for taxiing, takeoff, climb, etc., are described, including precautions to be observed. Your flying experience is recognized, therefore, basic flight principles are avoided. Only the duties of the minimum crew necessary for the actual operation of the helicopter are included. Mission equipment checks are contained in Chapter 4, Mission Equipment. Procedures specifically related to instrument flight and navigation techniques that are different from normal procedures are covered in FM 1-240. Descriptions of functions, operations, and effects of controls are covered in Section IV, Flight Characteristics, and are repeated in this section only when required for emphasis. Checks that must be performed under adverse environmental conditions, such as desert and cold-weather operations, supplement normal procedures checks in this section and are covered in Section V, Adverse Environmental Conditions.

8-7. SYMBOLS DEFINITION.

Items which apply only to night or only to instrument flying shall have an N or an I, respectively, immediately preceding the check to which it is pertinent. The symbol "O" shall be used to indicate "if installed". Those duties which are the responsibility of the non-flying pilot will be indicated by a circle around the step number, i.e., ④. A star "★" preceding a step/procedure indicates an operational check is required. The operational checks are contained in the performance section of the condensed checklist. An asterisk "*" indicates that performance of step is mandatory for all through flights. The asterisk applies only to checks performed prior to takeoff. Placard items such as switch and control labels are listed in uppercase letters.

8-8. CHECKLIST.

Normal procedures are listed primarily in checklist form, and amplified as necessary in accompanying paragraph form when a detailed description of the procedure or maneuver is required. A condensed version of the amplified checklist, omitting all explanatory text, is contained in the operator's checklist. To provide for easier cross-referencing, the procedural steps in the checklist are numbered to coincide with the corresponding numbered steps in this manual.

8-9. PREFLIGHT CHECK.

The pilot's walkaround and interior checks are outlined in the following procedures. The preflight check is not intended to be a detailed mechanical inspection. The preflight order is a recommended sequence only. The expanded substeps do not need to be memorized or accomplished in order. The steps that are essential for safe helicopter operation are included. The preflight may be made as comprehensive as conditions warrant at the discretion of the pilot.

8-10. BEFORE EXTERIOR CHECK.

WARNING

Do not preflight until armament systems are safe, switches off, safety pins installed and locking levers in locked position.

1. Publications - Check DA Forms 2408-12, -13 series, -14, and -18; DD Form 365-4; required forms, publications, and availability of operator's manual(s) (-10) and checklist (-CL).

* 2. Helicopter covers, locking devices, tiedowns, and grounding cables - Removed and secured.

* 3. Fuel - Check quantity as required.

4. Fuel sample - As required. Check for contamination before first flight of the day and after adequate settling time after cold refueling, or if fuel source is suspected of contamination.

8-11. EXTERIOR CHECK.

Exterior walkaround diagram is shown in Figure 8-1.

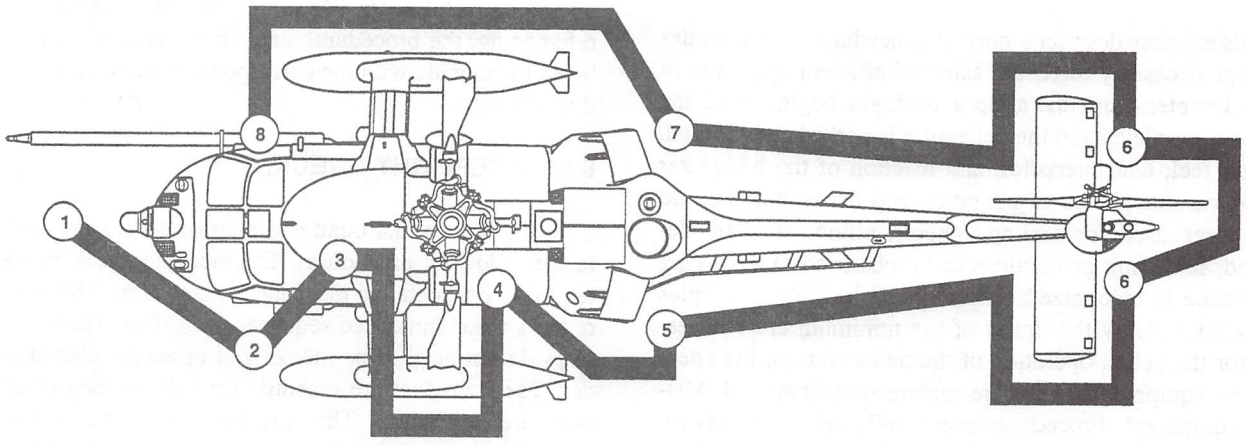

AK0069
SA

Figure 8-1. Exterior Inspection

8-12. NOSE SECTION (AREA 1).

CAUTION

Do not deflect main rotor blade tips more than 6 inches below normal droop position when attaching tiedowns. Do not tie down below normal droop position.

* 1. Main rotor blades - Check.

2. Fuselage - Nose area, check as follows:

   a. Refueling probe - Check.

   b. Windshield and wipers - Check.

   c. OAT sensor - Check.

   d. Avionics compartment - Check MMR and other equipment as required, secure door.

   e. Avionics air inlet and exhaust - Check.

   f. Antennas - Check.

   g. FLIR - Check.

   h. Landing and search lights - Check.

8-13. COCKPIT LEFT SIDE (AREA 2).

1. Cockpit area - Check as follows:

   a. Cockpit door - Check.

   b. Copilot seat, belts, and harness - Check.

   c. Set switch on dimmer control box as desired - NORM for IR dimming.

   d. Antennas - Check.

   e. Landing gear support fairing and step - Check.

   f. Position light - Check.

   g. Main landing gear - Check.

O h. ETS ejector rack locking levers locked, fairing, and external tanks - Check, refueling caps secure.

i. Gunner's window - Check.

* 2. Left engine oil level - Check.

8-14. CABIN TOP (AREA 3).

1. Cabin top - Check as follows:

   a. Left engine - Check; inlet.

   b. Left Pitot tube - Check.

   c. Control access - Check flight controls, hydraulic reservoirs, and filter indicators. Check tempilabels for safe indication and security. Check area.

   d. Control access cover - Close and check secured.

   e. Right Pitot tube - Check.

   f. Right engine - Check, inlet.

O g. IRCM - Check.

2. APU - Check; oil level.

3. Antennas - Check.

4. Gust lock - Check.

* 5. Rotor brake - Check.

6. Main transmission - Check; oil level.

* 7. Main rotor system - Check controls, dampers, head, and blades. BIM® indicators - Check for safe indication (yellow color).

8-15. INTERIOR CABIN (AREA 4).

1. Cabin - Check as follows:

   a. Fire extinguishers - Check.

   b. First aid kits - Check.

   c. Avionics cabinets - Check.

   d. FLIR video cassette recorder.

   e. Map display generator - DTM load, if required.

   f. Cabin overhead circuit breakers - Check.

   g. Cabin interior - Check security of stowed equipment.

   h. Cabin seats and belts - Check.

2. Transmission oil filter impending bypass indicator - Check.

3. APU accumulator pressure gage - Check minimum 2,800 psi.

4. Survival gear and mission equipment - Check as required.

   a. FRIES bar.

O b. M-43 mask blower mounts and unit - Check.

O c. M-134 minigun system - Check.

O d. Auxiliary fuel tanks - Check condition and security.

8-16. FUSELAGE LEFT SIDE (AREA 5).

1. Cabin door- Check.

2. Fuselage - Check as follows:

   a. Fuel tank filler ports - Check caps secure, doors secured.

   b. External pneumatic inlet port - Door secured.

   c. Engine exhaust - Check.

   d. APU exhaust - Check.

O e. Chaff dispenser - Check number and programmer settings.

   f. Lower anticollision light - Check.

   g. Antennas - Check.

   h. Tail landing gear - Check.

* 3. Intermediate gear box - Check; oil level.

8-17. TAIL PYLON (AREA 6).

1. Tail pylon - Check as follows:

   a. Tail pylon - Check.

   b. Stabilator - Check locking pin keepers in locked position, stabilator locking pins fully extended.

   c. Antennas - Check.

   d. Position light - Check.

   e. Upper anticollision light - Check.

* 2. Tail rotor - Check.

* 3. Tail rotor gear box - Check; oil level.

8-18. FUSELAGE RIGHT SIDE (AREA 7).

1. Fuselage - Check as follows:

   a. Antennas - Check.

   O b. Flare dispenser - Check number and programmer settings.

   c. Air exhaust - Check clear of obstructions.

   d. Engine exhaust - Check.

   e. Fire bottles thermal plug - Check.

   f. Avionics compartment - Check; access door secured.

   g. Fuel tank gravity filler port - Check cap secure, door secured.

2. Cabin door - Check.

8-19. COCKPIT RIGHT SIDE (AREA 8).

* 1. Right engine oil level - Check.

2. Cockpit area - Check as follows:

   a. Ice detector - Check.

   b. Ambient sense port - Check.

   O c. Rescue hoist - Check.

   O d. ETS, ejector rack locking levers locked, safety pins installed, fairings, and external tanks - Check refueling caps secure.

   e. Gunner's window - Check.

   f. External electrical power receptacle - Door secured.

   g. Main landing gear - Check.

   h. Position light - Check.

   i. Landing gear support fairing and step - Check.

   j. Antennas - Check.

   k. Cockpit door - Check.

   l. Pilot seat, belt, and harness - Check.

★* 3. Crew and passenger briefing - Complete as required.

8-20. BEFORE STARTING ENGINES.

* 1. Copilot's collective - Extended and locked.

2. Shoulder harness locks - Check.

3. PARKING BRAKE - Release, then set.

★* 4. Circuit breakers and switches - Set as follows:

   a. Circuit breakers - In.

   b. GUN SYSTEM CONTROL panel switches - SAFE.

   c. ZEROIZE/EMERGENCY panel switches - SAFE.

   d. FUEL MGT panel switches - Check.

      (1) MODE SEL switches - XFER and MANUAL.

      (2) MAN EXT FLOW switch - OFF.

      (3) EXT TANK JETT switches - SAFE.

e. CONV FAIL switch - Set as desired.

f. CHAFF/FLARE panel switches - SAFE.

g. BLADE DEICE panel POWER switch - OFF.

h. Rescue hoist - Check off.

i. Non-IASS avionics - Off.

j. FUEL XFER swtich - AUTOMATIC.

k. Storm scope - OFF.

l. MFD mode selector switches - Set as required.

m. BACKUP HYD PUMP switch - AUTO.

WARNING

White strobe lights may cause a safety hazard. Personnel may be affected by the brilliance and pulse of the light.

n. ANTI COLLISION and POSITION LIGHTS switches - As required.

o. CARGO HOOK EMER REL switch - OPEN.

p. CARGO HOOK CONTR ARMING switch - SAFE.

q. APU CONTR switch - OFF, APU T-handle in.

r. GENERATORS NO.1 and NO.2 switches - ON.

s. AIR SOURCE HEAT/START switch - APU (OFF for external air source).

t. EMER OFF T-handles - Full forward.

NOTE

When utilizing external power with AP102 mission processors, verify MP1 and MP2 circuit breakers are pulled prior to applying power. (AP102A missions processors do not require circuit breakers to be pulled.)

O u. Ground power unit - Connected if required. EXT PWR switch - RESET, then ON.

v. BATT switch - ON.

8-21. COCKPIT EQUIPMENT CHECKS.

* 1. FUEL PUMP switch - APU BOOST.

NOTE

Upon actuation of the APU start switch, a 1 to 3-second delay may be encountered before the APU start is actuated.

If APU fails, note and analyze BITE indications before cycling BATT switch or before attempting another APU start.

* 2. APU CONTR switch - ON.

WARNING

Stabilator may move to full trailing edge down position upon application of ac power. Ensure stabilator area is clear prior to energizing stabilator system.

Turret FLIR unit (TFU) may move through limits of travel as soon as ac power is applied to the aircraft. Ensure that the TFU area is clear of personnel prior to applying ac power to the aircraft.

* 3. APU generator switch - ON.

O* 4. EXT PWR switch - OFF and cable disconnected.

★* 5. IASS avionics - Check.

NOTE

If the L1 (OP RDY) key on the equipment status summary pages is depressed, it will put the entire avionics system into a built in test procedure. In this mode, it will take approximately 18 to 20 minutes to complete the IBIT on all equipment.

a. Press T5 (MFD SYST) key to access system control layer.

b. Press L3 (EQP STAT) key to access equipment status table pages.

c. Press R1 (CLR) key twice.

d. Use L1 (SEQ▲) or L2 (EQP▼) key to move the delta pointer up or down on the page for access to each item of equipment, if required.

NOTE

The power on/off state for equipment normally remains at the last set condition prior to shutdown; however, equipment power condition should be verified.

e. Use MFD R1 through R4 keys to check status, clear status, turn power on or off, test, or initialize as desired. Each character or code in the columns is defined in Chapter 3.

f. Use R5(PG▲) or R6(PG▼) key to access another equipment status page. Repeat steps d. through f. until all 5 five pages have been checked.

★* 6. Initiate INU, AHRS, GPS, and TRN alignments.

NOTE

Perform 6a. procedures for a normal alignment and 6b. procedures for a ship alignment. Air alignment, if required, is referenced under AFTER TAKEOFF procedures.

INU, AHRS, and GPS alignments/ initializations may be performed simultaneously.

a. Initiate INU normal alignment - As required.

(1) Select MFD navigation page by pressing T5 (SYST) key, then R7 (NAV) key.

(2) Enter/reenter correct data on CDU navigation page (BARO PRESS or BARO ALT).

NOTE

If the Doppler is off or unavailable and the GPS is available, the pilot can select SEA mode, select AIR alignment, initialize (INIT) the alignment, then sequence back to the the LAND mode. This allows the INU to correctly select the Doppler or GPS as the velocity source if the Doppler becomes available.

(3) Select MFD navigation initialization page by pressing R7 (NAV INIT) key.

(4) Enter/reenter correct data on the CDU navigation initialization page (LAT/ LONG or UTM). (For GPS initialization, enter DATE and TIME (Zulu time).)

NOTE

If SEA mode is active on the navigation display page, SHIP will be displayed instead of AIR and FAST will be removed.

To perform a FAST alignment, a NORM alignment must have been performed prior to shutdown on the previous flight/aircraft runup and the aircraft must not have been moved.

(5) Press L2 key until desired INU alignment mode is displayed (NORM or FAST).

(6) Press L3 (INIT) key. The legend next to the key will count down from 8 to 1 (approximately 8 minutes for a normal alignment).

(7) If the number 8 fails to appear within INIT legend after 10 seconds, perform the following:

(a) MFD T5 (SYST) key press, then press MFD L3 (EQP STAT) key.

(b) Press R6 (PG▼) key twice and L2 (EQP▼) key once to sequence pointer adjacent to INU on equipment status page 3.

(c) MFD R2 key press twice to display PWR OFF, wait at least 10 seconds.

(d) Press MFD R7 (MAINT TEST) key twice - Maintenance test page will be displayed on all MFDs.

(e) Enter/Reenter zero "0" adjacent to CDU keys R1 (BORE PITCH), R2 (BORE ROLL), and R3 (BORE YAW).

(f) MFD R7 (EQP STAT) key press - MFDs should return to their previous display.

(g) Pull INU circuit breakers.

(h) Reset INU circuit breakers.

(i) Return to step a. above.

If the INU displays the number 8, but fails to acquire a valid LAT/LONG after 10 seconds, perform the following:

(j) Press MFD T5 (SYST) key, then press L3 (EQP STAT) key.

(k) Press R6 (PG▼) key twice, then press L2 (SEQ EQP▼) key once to sequence pointer adjacent to INU on equipment status page 3.

(l) Press R2 (PWR ON) key twice. PWR OFF should be displayed adjacent to R2 key. Wait at least 10 seconds, then pull the INU circuit breakers.

(m) Reset INU circuit breakers. PWR ON should be displayed adjacent to R2 key on equipment status page 3.

(n) Return to step a. above.

(8) INU alignment is successfully completed when a 1 is displayed adjacent to L3 (INIT) key (approximately 8 minutes).

WARNING

Terrain following (TF) mode of the multimode radar (MMR) shall not be used after an INU SHIP alignment.

NOTE

Doppler or GPS data must be available and the WOW switch enabled to perform an INU SHIP alignment.

b. Initiate INU SHIP alignment - As required.

(1) Press MFD T5 (SYST) key, then press MFD R7 (NAV) key.

(2) Press MFD R6 key until SEA is displayed.

(3) Press MFD R7 (NAV INIT) key to display navigation initialization page.

(4) Enter/reenter correct data on the CDU navigation initialization page (LAT/LONG or UTM).

(5) Press MFD L2 key to display SHIP.

NOTE

If the SHIP alignment cannot be completed before takeoff, two options are available: Pilot can press L3 (INIT) key and takeoff after pitch, roll, and heading data are available (indicated by the presence of the heading and attitude indications on an MFD VSD/HSD page) or waiting eight minutes for an AIR alignment to start automatically (indicated by L3 (INIT) key displaying a 5). After takeoff, perform AIR alignment as described in AFTER TAKEOFF procedures.

(6) Press MFD L3 (INIT) key to start the SHIP alignment. Maintain WOW until alignment is complete as indicated by L3 (INIT) key legend decrements from 5 to 1 (approximately 45 minutes).

c. To align AHRS, perform the following:

(1) Press R2 key until the desired alignment mode is displayed (FAST or NORM).

NOTE

If the PARKING BRAKE handle is released before R3 (INIT) key legend decrements to 1, R3 (INIT) key legend value will remain at the value displayed when the PARKING BRAKE handle was released and the AHRS will be operating in a degraded condition.

(2) Press R3 (INIT) key. The legend next to this key will display 8.

(3) AHRS alignment is successfully completed when a 1 is displayed adjacent to R3 (INIT) key (approximately 8 minutes).

NOTE

If a Doppler failure exceeds 20 minutes or the Doppler goes into memory for 20 minutes while the AHRS is in the NAV mode, the AHRS will degrade to DG/VG mode. AHRS NAV mode will be unavailable.

When the PARKING BRAKE handle is released or weight-off-wheel occurs, the system will automatically transition to INU and AHRS navigate modes. The IASS will also select the most accurate navigation system available to provide aircraft position information.

An INU normal alignment must be completed and digital terrain elevation data, radar and barometric altimeter data must be available in order to initialize terrain reference navigation.

d. Press L4 (GPS INIT) and L5 (TRN INIT) keys to initialize the GPS and TRN systems.

* 7. CMPTR PWR RESET and SAS/BOOST switches - Cycle ON.

★ 8. LTS INDICATOR switch - TEST, Check. (Pilot's and copilot's master warning panel lights on except MASTER CAUTION PRESS TO RESET, LOW ROTOR RPM will flash, caution/advisory capsules on the upper console illuminated, AFCS FAIL ADVISORY lights on, AFCS CONTROL panel lights on, AUX ICS panel lights on, MISC SW panel lights on, FUEL MGT panel lights on, ZEROIZE/EMERGENCY panel light on, and STABILATOR control panel lights on.)

★N 9. NVG lighting - Check as required.

a. INST LT PILOT MFD - On and set as desired.

b. LTS INDICATOR switch - BRT/DIM momentarily, then TEST and hold. (Pilot's and copilot's master warning panel lights on, LOW ROTOR RPM will flash, caution/advisory capsules on upper console illuminated, AFCS FAIL ADVISORY lights on, AFCS CONTROL panel lights on, AUX ICS panel lights on, MISC SW panel lights on, FUEL MGT panel lights on, ZEROIZE/EMERGENCY panel light on, and STABILATOR control panel lights on.)

c. MA WARN DIMMING dimming controls - Set as desired.

d. RAD ALT DIMMING control - Set as desired.

e. CABIN DOME LT switch - As desired.

f. CABIN DOME LT control - Set by cabin crewmember.

g. Cargo hook well lights - Check as follows if use is anticipated:

(1) CARGO HOOK LT switch - ON.

(2) Crewmember check cargo hook well lights - Illuminated.

(3) CARGO HOOK LT switch - OFF.

h. INST LTS CPLT MFD control - Set as desired.

i. LIGHTED SWITCHES dimmer control - Set as desired.

j. FORMATION LT switch - As desired.

k. GLARESHIELD LIGHTS dimmer control - As desired.

l. CONSOLE LT UPPER control - Set as desired.

m. CONSOLE LT LOWER control - Set as desired.

n. INST LT BACKUP control - Set as desired.

O o. ADSS - Check and set as desired.

p. Utility lights - Set as desired.

q. BLUE-OFF-WHITE switch on secondary overhead lights - As desired.

★O 10. Mission equipment - Check.

★O a. Cargo hook emergency release circuit check.

(1) CARGO HOOK EMERG REL TEST light - Press, light should illuminate.

(2) Pilot's release check.

(a) Verify RESCUE HOIST panel CKPT/OFF/ALL switch is at OFF.

(b) Short test.

1 CARGO HOOK EMERG REL switch - SHORT.

2 Pilot's cyclic EMER REL button - Press and hold.

3 CARGO HOOK EMERG REL TEST light - On.

4 Pilot's cyclic EMER REL button - Release, TEST light should be off.

5 Repeat steps (2) through (4) for copilot's EMER REL button, and crewmember's cargo hook control pendant EMER RLSE button.

(c) Open test.

1 CARGO HOOK EMER REL switch - OPEN.

2 Repeat steps 2 through 5 of short test for open test.

(3) CARGO HOOK EMERG REL switch - NORM. If the cargo hook is not to be used immediately after completing the circuit test check, the EMERG REL switch shall remain at OPEN until ready for load pickup.

★O b. Rescue hoist check.

(1) Rescue hoist functional check.

CAUTION

During rescue hoist checks while on the ground, always have a crewmember apply tension to the cable to prevent backlash and/or hoist jams.

Operation of the rescue hoist in the backup mode is for emergency situations, except for pre-flight checks, routine raising and lowering of the hoist in the backup mode shall be avoided.

NOTE

Do not operate any hoist control switches without the backup pump in operation.

(a) BACKUP HYD PUMP switch - ON.

(b) Cockpit RESCUE HOIST panel switch - CKPT.

(c) HOIST ARMED annunciator message illuminated on MFDs.

(d) Pilot lowers hoist cable by pressing the cockpit RESCUE HOIST control panel switch toward the DOWN position.

(e) Pilot raise hoist cable by pressing the cockpit RESCUE HOIST control panel switch toward the UP position.

(f) Crewmember - Perform hoist check using pendant UP/DOWN control.

1 Using crewmember's pendant, lower rescue hoist cable to the ground.

2 Using the crewmember's pendant, raise rescue hoist cable to full up position.

(g) Repeat substeps 1 and 2 of (f) above using the crewmember hover grip control.

(h) Cockpit RESCUE HOIST panel switch - OFF.

(i) HOIST ARMED annunciator message should disappear from MFDs.

(j) BACKUP HYD PUMP switch - As required.

(2) Emergency backup control check - As required.

(a) BACKUP HYD PUMP switch - ON.

(b) Cabin RESCUE HOIST control panel BACKUP CONTROL POWER button - Press, NORMAL POWER light off.

CAUTION

When operating in the BACKUP CONTROL POWER mode, all limit switches are inactive. It is possible to run the cable completely off the drum, backwind the cable, or jam the hook into the cable housing.

(c) Cabin RESCUE HOIST control panel DOWN switch - Press and hold until approximately 10 feet of cable has been lowered.

CAUTION

Make sure hoist cable is completely up, to prevent cable wear between cable and hook assembly.

(d) Cabin RESCUE HOIST control panel UP switch - lift upward and hold until cable has been rewound.

(e) BACKUP HYD PUMP switch - As required.

★* 11. Cold weather control exercise - Check if temperature is below -17°C (2°F), See Section V.

★ 12. Flight controls - Check first flight of the day:

a. Primary Servos - Check as follows:

(1) SAS 1, SAS 2, TRIM, and AUTO PLT - Check off (SAS 1, SAS 2, TRIM, and AUTO PLT lights off, check SAS FAIL caution message on).

(2) SAS/BOOST and CMPTR PWR/RESET - Check on (lighted switches illuminated).

(3) Pilot's SERVO switch - 1ST OFF. No allowable stick jump, PRI SERVO #1 PRESS LO caution message, and both MASTER CAUTION PRESS TO RESET warning lights on. Reset master caution. Copilot's SERVO switch 2ND OFF, then on (center). There should be no control reaction.

NOTE

With the collective in the full up position and the cyclic stick at the forward left corner of it's movement envelope, a ratcheting may be felt through the cyclic control and airframe and heard in the cockpit as the cyclic control is moved to the right. This normal ratcheting of the swashplate uniball bearing on the star guide assembly will occur at the specific flight control orientation and movement listed above only. Ratcheting or binding noted with the flight controls oriented in any other position or direction of movement must be assumed to be an unassociated control problem or deterioration of the teflon coating of the uniball bearing.

(4) Move controls slowly through full range in no less than 5 seconds. There should be no binding or restriction.

Move collective from full down to full up, then full down in about 2 seconds. Check PRI SERVO #2 PRESS LO caution message does not display during movement of the collective.

NOTE

If PRI SERVO #2 PRESS LO caution message displays during collective movement, No.2 stage bypass valve spool may be jammed. Make an entry on DA Form 2408-13-1. Do not fly helicopter.

(5) Pilot's SERVO switch - 2ND OFF. No allowable stick jump, PRI SERVO #1 PRESS LO caution message off. PRI SERVO #2 PRESS LO caution message and both MASTER CAUTION PRESS TO RESET warning lights on. Reset master caution. Copilot's SERVO switch 1ST OFF, then on (center). There should be no control reaction.

(6) Move controls slowly through full range in no less than 5 seconds. There should be no binding or restriction. Move collective from full down to full up, then full down in about 2 seconds. Check PRI SERVO #1 PRESS LO caution message does not display during movement of the collective.

NOTE

If PRI SERVO #1 PRESS LO caution message displays during collective movement, No.1 stage bypass valve spool may be jammed. Make an entry on DA Form 2408-13-1. Do not fly helicopter.

(7) SERVO switches - ON (center). PRI SERVO #2 PRESS LO caution message off.

b. Boost servos - Check as follows:

(1) Collective at midposition, pedals centered.

(2) SAS/BOOST - Disengage. Check BOOST SERVO OFF and AFCS DEGRADED caution messages displayed. Collective stick and pedals should not jump more than 1/16 inch.

NOTE

Slight pedal control deflection may be necessary to prevent excessive collective movement. Full range movement of controls shall be performed in not less than 5 seconds.

(3) Move collective through full range. Note full control range and increase in control forces without binding.

(4) Move tail rotor pedals through the full range. Note increase in control pressures without binding.

(5) Collective and pedals - Midposition.

(6) SAS/BOOST - Engage. Check BOOST SERVO OFF and AFCS DEGRADED caution messages are off.

c. Tail rotor servo - Check as follows:

(1) TAIL SERVO switch - BACKUP. #1 TAIL RTR SERVO caution message, both MASTER CAUTION PRESS TO RESET lights, and #2 TAIL RTR SERVO ON advisory messages on. Check for binding or restriction while moving pedals through full range.

(2) TAIL SERVO switch - NORMAL. Caution messages and warning lights check extinguished.

d. AFCS ground - Check as follows:

(1) SAS Check.

(a) SAS 1 on (for 7 seconds) - Two distinct movements of the main rotor controls may occur, the first movement about 2.5 seconds after engaging SAS 1 and the second movement about 4 seconds after the first movement. SAS FAIL and AFCS DEGRADED messages should not be displayed.

(b) SAS 1 - Off.

(c) SAS 2 - On (for 7 seconds), then off. No movement of main rotor blades should occur.

(2) AFCS TRIM Check.

(a) AFCS CONTROL panel TRIM - On, then off. No movement should occur in the controls.

(b) AFCS CONTROL panel TRIM - On.

(c) Without depressing the cyclic TRIM REL button, move cyclic fore, aft, and lateral, checking for increase in gradient force with control displacement.

(d) Center pedals and place collective at midposition. Without depressing pedal microswitches or collective trim release trigger, check for increase in gradient force with collective and pedal displacement.

(e) Cyclic TRIM beeper - Check fore, aft, and lateral.

(3) Autopilot Check as follows:

(a) AFCS CONTROL panel SAS 1, SAS 2, and TRIM - On (check SAS FAIL caution message off).

(b) AFCS CONTROL panel AUTO PLT - On, then off. No movement in flight controls should occur.

(c) AFCS CONTROL panel AUTO PLT - On.

(d) Move controls through full range. Check for restrictions, control feedback, and rotor blade chatter. If any of the above are detected, repeat the step with each SAS/TRIM/AUTO PLT disengaged separately to determine in which system and axis the discrepancy exists.

(e) SAS 1, SAS 2, TRIM, and AUTO PLT - Check on.

★ 13. Stabilator - Check.

NOTE

The stabilator bias must be changed to reflect ETS removed or ETS installed. If the indicator does not reflect within the range of the current configuration, then the bias must be checked and adjusted.

a. STAB POS indicator should be between 34° and 42° DN with ETS removed, and between 32° and 40° DN with ETS installed.

b. TEST button - Press and hold. Check STAB POS indicator moves up 5° to 12°. MASTER CAUTION PRESS TO RESET lights illuminated, and STABILATOR FAIL caution message on and stabilator voice warning heard. VOICE ACK pushbutton on cyclic grip, press to acknowledge voice warning message.

c. AUTO CONTROL PUSH TO RESET switch - Press (ON light illuminated). Note that the STABILATOR FAIL caution message is off, and STAB POS indicator moves full down and as indicated in step a. above.

d. Either cyclic slew-up switch - Press and hold until STAB POS indicator moves approximately 15° trailing edge up: release, stabilator should stop. STABILATOR FAIL caution message, and MASTER CAUTION PRESS TO RESET warning lights ON. Voice warning audio in pilot's and copilot's headsets. MASTER CAUTION PRESS TO RESET and VOICE ACK - Press to reset MASTER CAUTION PRESS TO RESET warning lights and VWS message.

e. Other cyclic slew-up switch - Press and hold until STAB POS indicator moves approximately 15° trailing edge up; release, stabilator should stop.

f. MAN SLEW switch - UP and hold until stabilator stops. STAB POS indicator moves between 8° and 12° up with ETS installed or between 6° and 10° with ETS removed.

g. MAN SLEW switch - DN and hold until STAB POS indicator reads 0°.

h. AUTO CONTROL PUSH TO RESET switch - Press ON. STAB POS indicator moves full down and as indicated in step a. above. STABILATOR FAIL caution message off.

NOTE

If any part of stabilator check fails, do not fly helicopter.

* 14. Backup instruments - Set:

a. Backup radar altimeter - Set as desired.

b. Backup barometric altimeter - Set.

c. Backup attitude indicator - Cage, set as desired.

d. Chronometer - Set.

* 15. Cyclic and pedals centered. Collective raise no more than 1 inch (to prevent droop stop pounding).

* 16. BACKUP HYD PUMP switch - OFF.

★ 17. Blade deice system - Test as required.

CAUTION

To prevent overheating of droop stops, blade deice test shall not be done more than one time within a 30-minute period when rotor head is not turning.

a. Ice rate meter PRESS TO TEST button - Press and release.

b. Ice rate meter indicator - Moves to half scale (1.0), holds about 50 seconds; then falls to 0 or below. ICE DETECTED caution message and MASTER CAUTION PRESS TO RESET lights on after 15 to 20 seconds into the test, and FAIL flag should not be visible in flag window. Ice rate meter should move to zero within 75 seconds after pressing PRESS TO TEST button.

c. BLADE DE-ICE TEST panel switch - NORM.

NOTE

PWR MAIN RTR and PWR TAIL RTR fault monitor lights may flicker during tests in steps d. through r.

d. BLADE DEICE panel POWER switch - TEST.

e. PWR MAIN RTR and TAIL RTR monitor lights - Check. MAIN RTR monitor light may go on for 2 to 4 seconds. If either light remains on for 10 seconds or more:

(1) BLADE DEICE panel POWER switch - OFF.

If either light is still on:

(2) APU generator switch and/or EXT PWR - OFF.

f. TEST IN PROGRESS light - Check. The light should be on for 105 to 135 seconds. No other blade deice system lights should be on. PWR MAIN RTR and TAIL RTR monitor lights should go on for 2 to 4 seconds near the end of the test, the TEST in progress light should then go off.

WARNING

Droop stop hinge pins and cams may become very hot during test. Use care when touching those components.

g. Crewmember touch each droop stop cam - Cams should be warm to touch.

h. BLADE DEICE panel POWER switch - OFF.

i. BLADE DE-ICE TEST panel switch - SYNC 1.

j. BLADE DEICE panel POWER switch - TEST. MR DEICE FAIL caution and MASTER CAUTION PRESS TO RESET lights on.

k. BLADE DEICE panel POWER switch - OFF. MR DEICE FAIL caution message and MASTER CAUTION PRESS TO RESET lights off.

l. BLADE DE-ICE TEST panel switch - SYNC 2.

m. BLADE DEICE panel POWER switch - TEST. MR DEICE FAIL caution message and MASTER CAUTION PRESS TO RESET lights on.

n. BLADE DEICE panel POWER switch - OFF. MR DEICE FAIL caution message and MASTER CAUTION PRESS TO RESET lights off.

o. BLADE DE-ICE TEST panel switch - OAT.

p. BLADE DEICE panel POWER switch - TEST. MR DEICE FAIL, and TR DEICE FAIL caution messages, and MASTER CAUTION PRESS TO RESET lights on.

q. BLADE DEICE panel POWER switch - OFF. MR DEICE FAIL, and TR DEICE FAIL caution messages, and MASTER CAUTION PRESS TO RESET lights off.

* 18. Avionics - Check as required.

8-22. STARTING ENGINES.

NOTE

At least 1 MFD shall be displaying the engine instrument page.

* 1. ENG FUEL SYS selector(s) - (XFD) for first start of day.

* 2. FUEL BOOST PUMP CONTROL switch(es) - As required.

* 3. ENGINE IGNITION switch - ON.

* 4. GUST LOCK caution message - Off.

* 5. MFD T4 (INST) key - Press to configure at least one (1) MFD to the engine instrument page.

* 6. Rotor brake - As desired (check 450 psi minimum if on).

* 7. Fire guard - Posted if available.

* 8. Rotor blades - Check clear.

★* 9. Engine(s) - Start as follows:

CAUTION

If start is attempted with ENGINE IGNITION switch OFF, do not place switch ON. Complete EMER ENG SHUTDOWN procedure.

a. If any of these indications occur, perform EMER ENG SHUTDOWN as required.

(1) No ENG TEMP indication within 45 seconds.

(2) No engine OIL PRESS within 45 seconds.

(3) No NP 1 or NP 2 within 45 seconds with rotor brake off.

(4) ENG 1 or ENG 2 STRT VLV OPEN caution message goes off before reaching 52% NG speed.

(5) ENG TEMP reaches 851°C before idle is attained (NG 63%).

CAUTION

To avoid damage to the engine start switch actuators, do not move the ENG POWER CONT lever from IDLE to OFF while pressing the starter button. During engine start and runup, ensure that cyclic is kept in neutral, collective one inch above full down, and pedals centered until NR reaches 50% minimum to prevent damage to anti-flap bracket bushings.

b. Starter button(s) - Press until NG speed increases; then release.

NOTE

If ENG 1 or ENG 2 STRT VLV OPEN message goes off when the starter button is released, and the ENG POWER CONT lever is OFF, the start attempt may be continued by pressing and holding the starter button until 52% to 65% NG speed is reached; then release button.

c. ENG TEMP - Check below 80°C before advancing ENG POWER CONT levers.

d. ENG POWER CONT lever(s) - IDLE. Start clock.

e. System indications - Check.

NOTE

If engine start was successful, ENG 1 and/or ENG 2 STRT VLV OPEN caution message(s) will extinguish by 64% to 66% NG speed due to system delay (approximately 2.5 seconds).

f. ENG 1 and ENG 2 STRT VLV OPEN caution messages check off at 52% to 66% NG speed. If ENG 1 or ENG 2 STRT VLV OPEN caution message remains on after 66% NG.

(1) ENG POWER CONT lever - Pull out. If caution message remains on:

(2) APU - Off or engine air source remove as required.

*. 10. If single engine start was made, repeat step 9. for other engine.

* 11. NG speeds 63% or more - Check.

NOTE

The collective tends to move downward when the rotor brake is released, one pilot must guard the collective when releasing the rotor brake.

* 12. Rotor brake- Off. Handle in detent, check brake pressure zero and ROTOR BRAKE ON caution message off.

* 13. Percent RPM - Check that NP 1 or NP 2 is not in the range of 20% to 40% or 60% to 90%. Advance ENG POWER CONT lever(s) as required.

* 14. Transmission pressure - Check.

* 15. Engine OIL PRESS - Check.

* 16. #1 and #2 HYD PUMP FAIL caution messages - Check off.

NOTE

Do not activate backup pump or other equipment that may interrupt electrical power during INU and AHRS alignments.

* 17. BACKUP HYD PUMP switch - AUTO.

★ 18. Hydraulic leak test system - Check as follows:

a. HYD LEAK TEST switch - TEST. #1 TAIL SERVO FAIL, AFCS DEGRADED, BKUP RSVR LO, BOOST SERVO OFF, SAS FAIL, HYDR RSVR 1 and 2 LO caution messages on; #2 TAIL SERVO ON, and BKUP HYD PUMP ON advisory messages on; and MASTER CAUTION PRESS TO RESET lights on. During this check, it is normal for the collective and pedals to move slightly.

b. HYD LEAK TEST switch - RESET. The lights in step a. should go off, except the BKUP HYD PUMP ON advisory message will go off after 90 seconds or go off if the BACKUP HYD PUMP switch is cycled momentary to off, and then to AUTO.

NOTE

If the backup pump is still running following the hydraulic leak test, cycle the BACKUP HYD PUMP switch to OFF, then back to AUTO.

★ 19. Tail rotor servo transfer - Check as follows:

a. BACKUP HYD PUMP switch - AUTO, backup pump should be off (not running).

b. TAIL SERVO switch - BACKUP. #1 TAIL SERVO FAIL caution message on, #2 TAIL SERVO ON advisory message on, and BKUP HYD PUMP ON advisory message on within 4 to 6 seconds.

c. TAIL SERVO switch - NORMAL. #1 TAIL SERVO FAIL caution message off, press MFD ACK key to acknowledge #2 TAIL SERVO ON advisory message, and BKUP HYD PUMP ON advisory message remains on for approximately 90 seconds.

★* 20. Cold weather control exercise - Check if temperature is below -17°C (2°F), see Section V.

8-23. ENGINE RUNUP.

* 1. Flight controls - Hold.

CAUTION

Restrict the rate of ENG POWER CONT lever movement, when the tailwheel lockpin is not engaged. Rapid application of ENG POWER CONT levers can result in turning of the helicopter.

* 2. ENG POWER CONT lever(s) - FLY.

* 3. Droop stops - Check out 70% to 75% NR.

* 4. #1 and #2 GEN FAIL caution messages - OFF at approximately 95% NR.

★ 5. Deice EOT - Check as required.

CAUTION

In ambient temperatures above 21°C (70°F), operate rotor at 100% NR for 5 minutes before doing the deice EOT check, to prevent blade overheating. Do not perform the deice EOT check if OAT is above 38°C (100°F).

a. BLADE DE-ICE TEST panel switch - EOT.

b. BLADE DEICE panel MODE switch - MANUAL M.

c. BLADE DEICE panel POWER switch - ON.

d. TR DEICE FAIL message and MASTER CAUTION PRESS TO RESET caution lights on after 15 to 30 seconds, and MR DEICE FAIL caution message on after 50 to 70 seconds.

e. BLADE DEICE panel POWER switch - OFF. TR DEICE FAIL, MR DEICE FAIL messages, and MASTER CAUTION PRESS TO RESET lights and messages off.

f. BLADE DE-ICE TEST panel switch - NORM.

NOTE

If helicopter was started using external air source and/or external ac power, the APU must be started to perform an APU generator backup check.

g. GENERATORS NO.1 or NO.2 switch - OFF. Applicable GEN FAIL messages and MASTER CAUTION PRESS TO RESET lights on.

h. BLADE DEICE panel POWER switch - ON. Wait 30 seconds; no deice messages on.

i. GENERATORS NO.1 and NO.2 switches - ON. Applicable generator caution message(s) off.

j. BLADE DEICE panel POWER switch - OFF.

k. BLADE DEICE panel MODE switch - AUTO.

* 6. TQ 1 and TQ 2 - Matched within 5%.

* 7. FUEL PUMP switch - OFF.

* 8. APU CONTR switch - OFF.

* 9. AIR SOURCE HEAT/START switch - As required.

10. ENG FUEL SYS selector - As required.

11. Engine Health Indicator Test (HIT)/Anti-Icing Check - Accomplish. Refer to ENGINE HEALTH INDICATOR TEST/ANTI-ICE CHECK IN HELICOPTER LOG BOOK. HIT/

ANTI-ICE checks while operating in adverse conditions (e.g., dust, desert, coastal beach area, dry river beds) may be deferred (maximum of 5 flight hours) until a suitable location is reached.

★* 12. Manual fuel transfer - Check as required.

a. MFD T4 (INST) key - Press to configure at least one (1) MFD to the engine instrument page.

NOTE

The NO FUEL TRANSFER caution message will come on any time the fuel in either tank is below 550 pounds ±10%. The NO FUEL TRANSFER caution message will stay on even during transfer as long as one tank is below 550 pounds ±10%.

If fuel transfer is required from the internal auxiliary tanks only, the external tanks must be isolated from the system by closing the unisex valves on the external tank fuel lines.

b. FUEL XFER switch on the instrument panel - AUTOMATIC.

c. FUEL MGT panel MODE SEL switches - XFER and MANUAL.

d. INT AUX switch - XFER, as desired.

e. PUMP switch - NO.1. or NO.2

f. MAN EXT TANK switch - FLOW.

NOTE

Ensure CG remains within limits during manual transfer.

g. Monitor left and right main fuel tank quantity readouts, when main fuel tanks quantity readouts are above 1050 pounds, place MAN EXT TANK switch - OFF.

h. When fuel transfer is complete, place MODE SEL switch - PROBE , and INT AUX switch - OFF.

★ 13. Probe extension and retraction check - If in-flight refueling is scheduled.

WARNING

Ensure personnel is clear of refuel probe during extension.

a. FUEL MGT panel MODE SEL switches - PROBE and AUTO.

b. PROBE control switch - EXTEND.

c. PUMP switch - NO.1 or NO.2.

d. STATUS UNLKD light illuminated while probe is extending, STATUS RDY light illuminated when fully extended and UNLKD light off.

e. Crewmember verify fuel probe extension.

f. PROBE control switch - RETRACT.

g. STATUS UNLKD light illuminated while probe is retracting, STATUS RDY light off. UNLKD light off when probe is fully retracted.

h. Crewmember verify fuel probe fully retracted.

* 14. FUEL MGT panel MODE SEL switches - XFER and AUTO.

8-24. BEFORE TAXI.

O* 1. Ejector rack lock levers unlocked and safety pins - Removed.

O* 2. Chaff and flare electronic module(s) safety pin(s) - Removed.

* 3. Chocks - Removed.

* 4. Doors - Secure.

* 5. PARKING BRAKE - Release.

* 6. TAIL WHEEL switch - As required.

8-25. GROUND TAXI.

CAUTION

When taxiing with aircraft gross weight within region B of Figure 5-8, adjust dual-engine torque to 25% or more to prevent surface contact with TFU, landing gear wire cutter/deflector, and radio antennas.

When performing these maneuvers, cyclic inputs should be minimized to prevent droop-stop pounding.

When taxiing over rough terrain, use extreme caution to avoid ground contact with the refueling probe or antennas underneath the helicopter.

Forward Taxiing. Increase collective and place cyclic forward of neutral to start forward movement. Minimize forward cyclic movement to prevent droop stop pounding. Reduce collective to minimum required to maintain forward movement. Soft or rough terrain may require additional collective pitch. The use of excessive collective pitch during taxi, especially at light gross weights, can cause the tailwheel to bounce. Regulate taxi speed with cyclic and collective and control heading with pedals. Use brakes as required. When taxiing over rough terrain, use care to avoid contact of the refueling probe with ground protrusions.

* Collective adjust - As required, at least 25% dual engine torque when aircraft gross weight is within region B of Figure 5-8.

8-26. HOVER CHECK.

* 1. Systems - Check engine instrument and caution summary pages for normal indications.

* 2. Flight instruments - Check.

* 3. Power - Check. Enter current values on CDU engine performance page. Compare TRQ AVL with TRQ RQD.

8-27. BEFORE TAKEOFF.

WARNING

Pitot heat and anti-ice will be on during operations in visible moisture with ambient temperature of 4°C (40°F) and below.

* 1. ENG POWER CONT levers - FLY.

* 2. Systems - Check.

a. T5 (SYST) key - Press.

b. L3 (EQP STAT) key - Press.

c. R1 (CLR) key - Press twice (clears all fault codes due to aircraft startup).

d. T5 (SYST) key - Press.

e. R7 (NAV) key - Press to display navigation control page.

f. Select the most accurate system available (indicated by the less than symbol "<") to enable proper operation of the automatic regression/progression mode.

* 3. Avionics - As required.

* 4. Crew, passengers, and mission equipment - Check.

a. FLIR - As required.

b. Radar - As required.

c. Weapon system - As required.

8-28. TAKEOFF.

WARNING

If the stabilator has not begun trailing edge up movement by 30 - 50 KIAS, abort the takeoff.

a. Align the helicopter with the desired takeoff course at a stabilized 10 foot hover (wheel height) or, an altitude permitting safe obstacle clearance. Increase collective pitch approximately 10% above hover torque, not to exceed aircraft limitations, and apply forward cyclic to maintain desired angle of climb. Simultaneously, adjust pedal pressure as necessary to maintain desired heading. Adjust power for desired rate of climb and trim helicopter as required.

b. Refer to the height-velocity diagram, Figure 9-2, for avoid areas. Since suitable landing areas are often not available, operating outside avoid areas during takeoff and climb will provide the highest margin of safety.

8-29. MAXIMUM PERFORMANCE.

A takeoff that demands maximum performance from the helicopter may be necessary because of various combinations of heavy helicopter loads, limited power and restricted performance due to high density altitudes, barriers or terrain features that must be cleared. The decision to use the following takeoff techniques must be based on an evaluation of the conditions and helicopter performance. The copilot should assist the pilot by monitoring ENG TEMP to assess proximity to ENG TEMP limits and should advise the pilot when approaching the ENG TEMP limits.

a. Coordinated climb. Align the helicopter with the desired takeoff course at a stabilized hover of about 10 feet (wheel height). Apply forward cyclic pressure smoothly and gradually, while simultaneously increasing collective pitch, begin a coordinated acceleration climb. Adjust pedal pressure as necessary to maintain the desired heading. Maximum torque available should be applied (without exceeding helicopter limits) as the helicopter attitude is established that will permit safe obstacle clearance. The climbout is continued at the attitude and power setting until the obstacle is cleared. After the obstacle is cleared, adjust helicopter attitude and collective pitch as required to establish a climb at the desired rate and airspeed. Continuous coordinated application of control pressures is necessary to maintain trim, heading, flight path, airspeed, and rate of climb. This technique is desirable when OGE hover capability exists. Takeoff may be made from the ground by positioning the cyclic slightly forward of neutral prior to increasing collective pitch.

b. Level acceleration/obstacle clearance takeoff.

(1) This procedure is intended for use when a takeoff must be made under conditions when hover capability is limited. Prior to attempting a level acceleration/obstacle clearance takeoff, thorough performance planning must be accomplished to ensure that adequate distance is available to clear any obstacles in the takeoff path. To ensure that a successful takeoff can be performed within the obstacle clearance distances presented in Figure 7-8, all takeoffs must be initiated from 5 feet, regardless of hover capability.

(2) Once it has been determined that a level acceleration/obstacle clearance takeoff is required and that sufficient distance is available to clear any obstacles, the procedure in step (3) shall be used.

(3) Align helicopter with the desired takeoff heading and stabilize main wheel at a 5-foot hover. Note helicopter hover pitch attitude on the primary attitude indicator. Apply forward cyclic pressure smoothly while simultaneously increasing collective to begin a level acceleration. The maximum available power should be applied before reaching the desired climb airspeed. Additional forward cyclic pressure will be required during the acceleration to overcome the tendency of the aircraft to climb. Approximately 5 KIAS prior to desired climb airspeed, rotate the helicopter to the hover pitch attitude previously noted. Check to ensure that maximum available power is applied. Adjust pitch attitude as necessary, to maintain desired climb airspeed. Once the obstacle has been cleared, adjust helicopter attitude and collective, as required, to establish the desired airspeed and rate of climb.

c. Comparison of techniques. Refer to Chapter 7 Performance Data, for a comparison of takeoff techniques. When OGE hover power is available, the coordinated climb technique will give a shorter distance over lower obstacles and the level acceleration technique will give a shorter distance over obstacles higher than 50 feet. The two techniques give about the same distance over a 50 foot obstacle when the helicopter can barely hover OGE. As hover capability is decreased, the level acceleration technique gives

increasingly shorter distances than the coordinated climb technique. In addition to distance comparison, the main advantages of the level acceleration techniques are: (1) It requires less or no time in the avoid area of the height velocity diagram (Figure 9-2); (2) Performance is more consistent since reference to attitude which changes with loading and airspeed is not required; (3) At the higher climbout airspeeds, reliable indicated airspeeds are available for accurate airspeed reference from the beginning of the climbout, therefore minimizing the possibility of descent. The main advantage of the coordinated-climb technique is that the climb angle is established early in the takeoff and more distance and time are available to abort the takeoff if the obstacle cannot be cleared. Additionally, large attitude changes are not required to establish climb airspeed.

8-30. AFTER TAKEOFF.

CAUTION

During manual fuel transfer operations, transfer must be made to prevent helicopter CG from going beyond forward CG limits.

O 1. ETS - Check flow.

O 2. Mission equipment - As required.

3. ASE - As required.

★ 4. INU AIR alignment - As required.

WARNING

Terrain following (TF) mode of the multimode radar (MMR) shall not be used during or after an INU AIR alignment.

NOTE

Doppler or GPS data must be available and the WOW switch must be disabled to perform an INU AIR alignment.

a. Press MFD T5 (SYST) key, then press R7 (NAV) key.

b. Press MFD R6 key until LAND is displayed.

c. Press MFD R7 (NAV INIT) key to display navigation initialization page.

d. Enter/reenter correct data on the CDU navigation initialization page (LAT/LONG or UTM).

NOTE

If AIR is not displayed adjacent to L2 key with WOW disabled, then an AIR alignment cannot be performed.

e. Press L2 key until AIR is displayed.

f. Take off and fly straight and level. Press MFD L3 (INIT) key to start the AIR alignment or wait 8 minutes for the air alignment to automatically start. The L3 (INIT) key legend will decrement from 5 to 1 in 45 minutes.

NOTE

Do not initialize an AIR alignment when the aircraft is accelerating, deccelerating, descending, climbing, or in a roll attitude.

g. Continue in straight and level flight until L3 (INIT) key legend displays 3, or fly straight and level for 6 to 8 minutes then turn 180 degrees and continue straight and level flight until the L3 (INIT) key legend decrements to 3. Use flight director heading hold during straight and level flight. Once the L3 (INIT) key legend decrements to 3, the pilot can continue normal flight.

h. Once L3 (INIT) key legend decrements to 2 (23 minutes into the alignment), degraded navigation must be selected by activating L1 (INU NAV) key on the navigation initialization page. INU AIR alignment is complete when L3 (INIT) key legend decrements to 1.

★ 5. In-flight refueling - As required.

a. Rendezvous checks.

(1) Crew brief - Complete.

(a) Type of rendezvous.

(b) Join-up altitude.

(c) Refueling altitude.

(d) Refueling airspeed.

(e) Tanker call sign.

(f) Planned fuel on load.

(g) Tanker formation.

(h) Tanker lighting.

(i) Spare tanker procedures.

(j) Confirm IFF/TACAN settings.

WARNING

Do not transmit on HF or SATCOM radio during refueling operations due to high levels of rf radiated energy.

CAUTION

If unisex vent valves are not open during pressure (aerial/close circuit) refueling of internal auxiliary tanks (No.1, No.2, No.3, and/or No.4), the tanks will be damaged from excessive internal pressure.

During refueling operations, limit radio transmissions to those necessary for communications with the tanker.

(k) Communication procedures - In, out, and on which radios.

(2) Fuel quantity - Check.

(3) Armament systems - Safe, stow guns.

(4) Altimeters - Set.

b. Join-up checks.

(1) Join-up altitude - Established.

(2) Refueling airspeed - Established.

(3) Lights - As required.

WARNING

Equipment in steps (4) through (6) must be off/standby for wet plugs.

(4) WINDSHIELD ANTI-ICE switches - OFF.

(5) HEATER and VENT BLOWER switches - OFF.

(6) ASE - STBY.

(7) Flare/Chaff dispensers - Safe.

(8) Windows and cabin doors - As required.

(9) Fuel probe extend.

(a) FUEL MGT panel MODE SEL switches - PROBE and AUTO.

(b) PROBE control switch - EXTEND.

(c) PUMP switch - NO.1 or NO.2.

(d) Verify STATUS RDY light - Illuminated.

(e) Verify fuel probe - Extended.

(10) Automatic refueling operation.

NOTE

In the event of a main or internal auxiliary tank high shut-off failure, the tank will overflow and fuel will be vented overboard. The OVER FLOW light on the FUEL MGT panel will illuminate.

(a) FUEL MGT panel MODE SEL switches - REFUEL and AUTO.

(b) INT AUX switch - REFUEL, as desired.

(c) PUMP switch - As desired.

(11) Manual refueling operation.

(a) FUEL MGT panel MODE SEL switches - REFUEL and MANUAL.

(b) INT AUX switch - REFUEL, as desired.

(c) PUMP switch - NO.1 or NO.2.

NOTE

Ensure CG remains within limits during manual refueling.

(d) MAIN EXT TANK switch - FLOW.

(e) Monitor fuel tanks status.

(f) INT AUX switch - OFF.

(g) MAIN EXT TANK switch - OFF, when tanks are full.

(h) MODE SEL switches - XFER and AUTO.

c. Observation checks.

(1) Transponder/IFF - STBY.

(a) MFD T1 key - Press to select HSD or VSD.

(b) MFD L6 (IFF) key - Press to display IFF control page.

(c) MFD R5 (IFF NORM, STBY, or EMC) key - Press to select IFF STBY.

(2) TACAN - OFF.

(a) MFD T5 (SYST*) key - Press.

(b) MFD L3 (EQP STAT) key - Press to display equipment status page.

(c) Press R5 (PG▲) key, R6 (PG▼) key, L1 (SEQ▲) key, and/or L2 (EQP▼) key to sequence pointer next to TACAN on equipment status page 3.

(d) MFD R2 (PWR ON or OFF) - Press to select PWR OFF.

(3) FLIR - OFF.

(a) MFD T5 (SYST*) key - Press.

(b) MFD L3 (EQP STAT) key - Press to display equipment status page.

(c) Press R5 (PG▲) key, R6 (PG▼) key, L1 (SEQ▲) key, and/or L2 (EQP▼) key to sequence pointer next to FLIR on equipment status page 2.

(d) MFD R2 (PWR ON or OFF) - Press to select PWR OFF.

(4) MMR - STBY.

(a) MFD T1 key - Press to select HSD or VSD.

(b) MFD T2 key - Press to select RDR.

(c) MFD R4 (RDR CTRL) key - Press to display radar control page.

(d) MFD L7 (NEXT) key - Press to display radar control page 2.

(e) MFD L4 (RDR ON, OFF, or EMC) key - Press to select RDR STBY.

(5) High reconnaissance - Completed.

d. Fuel flow checks.

NOTE

Crewmember announces "FUEL FLOW CHECKS - IN PROGRESS." When checks are completed, announces "FUEL FLOW CHECKS - ARE COMPLETED" and report any problems.

(1) Monitor fuel status of each tank.

NOTE

In the event of a main or internal auxiliary tank high shut-off failure, the tank will overflow and fuel will be vented overboard. The OVER FLOW light on the FUEL MGT panel will illuminate.

(2) POSITION LIGHTS - FLASH, before moving to disconnect.

e. Post refuel checks.

(1) Lights - As required.

(2) WINDSHIELD ANTI-ICE switches - As required.

(3) HEATER and VENT BLOWER switches - As required.

(4) Transponder/IFF - As required.

(5) MMR - As required.

(6) FLIR - As required.

(7) ASE - As required.

(8) Fuel probe retract.

(a) FUEL MGT panel MODE SEL switch - PROBE

(b) PROBE control switch - RETRACT.

(c) PUMP switch - NO.1 or NO.2.

(d) STATUS UNLKD light - Illuminated while probe is in transit.

(e) STATUS UNLKD light - Off, when probe is completely retracted.

(9) Armament systems - As required.

(10) TACAN - As required.

f. In-flight refueling tanker light signals (USAF)

(1) Tanker to receiver.

(a) One green: Clear to contact or clear to crossover.

(b) One white - Go to observation.

(c) Two white - Crossover.

(d) One amber - Prepare for turn.

(e) Two amber - Unable to refuel.

(f) Flashing red - Breakaway.

(2) Receiver to tanker.

(a) One flash - Reset response.

(b) Multiple flashes - Require more fuel.

8-31. BEFORE LANDING.

1. TAIL WHEEL switch - As required.
2. PARKING BRAKE - As required.
3. Crew and passengers - Check.

O 4. Mission equipment - Check as follows:

a. FLIR - As required.

b. MMR - As required.

c. Weapon system - As required.

O 5. ASE equipment - Check as follows:

a. Pulse jammer (AN/ALQ-136(V)2) - As required.

b. CW Jammer (AN/ALQ-162(V)2) - As required.

c. IR jammer (AN/ALQ-144A) - As required.

d. Chaff/Flare dispenser system - As required.

★O 6. FUEL MGT panel - Set as required.

8-32. LANDING.

CAUTION

During roll-on landing with aircraft gross weight within region B of Figure 5-8, do not lower dual-engine torque below 25%. Lowering dual-engine torque below 25% may cause surface contact with the TFU, landing gear wire cutter/deflector, or radio antennas.

During roll-on landing aerodynamic braking with aft cyclic is permitted with the tail wheel contacting the ground. Once the main wheels touchdown, the cyclic must be centered prior to reducing collective. Excessive aft cyclic may cause droop stop pounding and contact between main rotor blades and other portions of the aircraft. Aerodynamic braking is prohibited once the main landing gear touches down. Use brakes to stop the aircraft.

NOTE

Because of the flat profile of the main transmission, pitching the helicopter nose up as in a hover, may cause a transient drop in indicated main transmission oil pressure, depending on degree of nose-up attitude.

a. Roll-on landing. A roll-on landing may be used when the helicopter will not sustain a hover, to avoid hovering in snow or dust, or if tail rotor control is lost. A shallow approach angle is recommended. If possible, select a landing site with a smooth surface such as a runway or road. The approach is normally flown at 80 KIAS; however, other airspeeds may be used. At a point from which obstacles in the flight path can be cleared, assume a decelerating attitude as necessary while maintaining the desired angle of approach with collective. Effect a smooth touchdown on the tailwheel below 60 knots ground speed, but not below effective translational lift (ETL). Use enough collective to cushion touchdown of the tailwheel and main gear. After landing, center cyclic, lower collective, and apply brakes as necessary.

CAUTION

When performing sloping landing, extreme caution must be exercise during upslope landing to prevent contacting the surface with the refueling probe.

b. Slope landing. The tailwheel should be locked and the PARKING BRAKE set. For slope landings and all ground operations, avoid using combinations of excessive cyclic and low collective settings. Where minimum collective is used, maintain cyclic near neutral position and avoid abrupt cyclic inputs. During nose-down slope landings, low-frequency oscillations may be eliminated by moving cyclic toward neutral and lowering collective.

8-33. AFTER LANDING CHECK.

1. TAIL WHEEL switch - As required.
2. Exterior lights - As required.
3. Avionics/mission equipment - As required.

8-34. PARKING AND SHUTDOWN.

CAUTION

Cyclic inputs shall be minimized and restricted to prevent droop stop pounding.

1. TAIL WHEEL switch - As required.

NOTE

PARKING BRAKE ON message is actuated by the PARKING BRAKE handle. The advisory message does not necessarily mean that the wheel brakes are set.

2. PARKING BRAKE - Set.
3. Landing gear - Chocked.

O 4. Ejector rack locking levers - Locked.

O 5. Chaff and flare electronic module safety pin(s) - Install.

6. Deice, PITOT, ENG/WINDSHIELD ANTI-ICE, and HEATER switches - OFF.

O 7. FLIR VCR - Remove tape.

8. AIR SOURCE HEAT/START switch - APU.
9. FUEL PUMP switch - APU BOOST.

10. APU CONTR switch - ON.

★ 11. Equipment status summary pages - Check as follows:

a. MFD WCA key - Press.

b. MFD L2 (EQP STAT SUMM) key - Press.

c. R1 (LOG STAT) key - Press as required, LOG STAT legend will disappear until data is transferred to the DTM (approximately 10 seconds to transfer).

NOTE

INHB STAT is active for 50 seconds only. If power is not removed within 50 seconds of pressing INHB STAT, reactivate INHB STAT.

d. R2 (INHB STAT) key - Press, asterisk should appear. Note/Log equipment failure codes, present, past, and test status word bits (Page 1 and Page 2).

NOTE

If external electrical power is required for shutdown, it shall be connected and EXT PWR switch placed to RESET; then ON. If external ac power is not available, complete normal shutdown on right engine before continuing.

SAS 1, SAS 2, stabilator automatic mode, and other AFCS functions may disengage when switching between main generators, APU generator, and ground power units. Any function that shut down during the transient power condition caused by the switching of power source can be manually reengaged.

12. GENERATORS NO.1 and NO.2 switches - OFF.

13. MFD T4 (INST) key - Press to configure at least one (1) MFD to the engine instrument page.

14. Collective - Raise no more than 1 inch.

15. Flight controls - Hold.

CAUTION

During shutdown ensure that cyclic is kept in neutral, or displaced slightly into prevailing wind, collective no more than 1 inch above full down and pedals centered.

Restrict the rate of ENG POWER CONT lever movement, when the tailwheel lockpin is not engaged. Abrupt application of ENG POWER CONT levers can result in turning of the helicopter.

16. ENG POWER CONT levers - IDLE.

NOTE

Radar altimeter and air data computer will fail when the main generators switchover to the APU generator.

17. ENGINE IGNITION switch - OFF.

18. Backup attitude indicator - Cage.

CAUTION

To prevent damage to anti-flap stops, do not increase collective pitch at any time during rotor coast-down.

19. Cyclic - As required to prevent anti-flap pounding.

20. BKUP HYD PUMP ON advisory message - Check off.

21. BACKUP HYD PUMP switch - OFF.

22. Stabilator - Slew to 0 degree after last flight of the day.

23. MASTER CAUTION PRESS TO RESET - Press to acknowledge VWS.

CAUTION

Before moving ENG POWER CONT lever to OFF, engine must be cooled for 2 minutes at 90% NG or less. If an engine is shut down from a high power setting (above 90%) without being cooled for 2 minutes, and it is necessary to restart the engine, the restart should be done within 5 minutes after shut down. If the restart can not be done within 5 minutes, the engine should be allowed to cool for 4 hours before attempting an engine restart.

24. After engines have stabilized for 2 minutes at 90% NG or less - NO.2 ENG POWER CONT lever and NO.2 ENG FUEL SYS selector - OFF.

25. Droop stops - Verify in , about 50% NR. If one or more droop stops do not go in during rotor shutdown, accelerate rotor to above 75% NR. Repeat rotor shutdown procedures, slightly displacing cyclic in an attempt to dislodge jammed droop stop. If droop stops still do not go in, make certain that rotor disc area is clear of personnel and proceed with normal shutdown procedures while keeping cyclic in neutral.

26. NO.1 ENG POWER CONT lever and NO.1 ENG FUEL SYS selector - OFF.

27. Rotor brake - On at 30 to 50% NR (minimum pressure applied, 180 psi).

28. ENG TEMP - Monitor, If ENG TEMP rises above 468°C:

    a. Start button - Press.

    b. ENG POWER CONT lever(s) - Pull after ENG TEMP drops below 468°C.

29. DEC torque indicator fault code - CHECK (refer aircraft status page and paragraph 2-44, Digital Electronic Control, if required). DA Form 2408-13-1 entry is required if fault is indicated.

30. Mission equipment - As required:

    a. MMR - STBY.

    b. FLIR - STBY.

    c. ASE - STBY.

31. IFF mode 4 code - Deselect mode 4 and activate Hold, if required.

32. Check equipment status pages and power off INU and AHRS - As follows:

    a. MFD T5 (SYST) key - Press, then press MFD L3 (EQP STAT) key.

    b. Press R5 (PG▲) key, R6 (PG▼) key, L1 (SEQ▲) key, and/or L2 (EQP▼) key to sequence pointer next to equipment. Record present and past status word bits on equipment showing failures. Record word bits for all failures.

    c. Press R5 (PG▲) key, R6 (PG▼) key, L1 (SEQ▲) key, and/or L2 (EQP▼) key to display page 3 of the equipment status pages. Sequence pointer adjacent to INU, then press R2 key twice to display PWR OFF in the legend area. Sequence pointer adjacent to AHRS, then press R2 key twice to display PWR OFF in the legend area.

NOTE

Wait at least 10 seconds after turning off INU before removing ac power; otherwise, a boresight correction may be required on the INU.

33. MFD mode selector switches - Set as required.

34. Zeroize secure equipment - As required.

O 35. FUEL BOOST PUMP CONTROL panel NO.1 and NO.2 switch(es) - OFF.

O ★36. FUEL MGT panel switches - As required.

    a. INT AUX switch - REFUEL.

    b. MODE SEL switches - REFUEL and MANUAL.

c. MAN EXT TANK switch - FLOW.

CAUTION

If unisex vent valves are not open during pressure (aerial/close circuit) refueling of internal auxiliary tanks (No.1, No.2, No.3, and/or No.4), the tanks will be damaged from excessive internal pressure.

d. Unisex auxiliary fuel valves - As required.

37. Non-IASS avionics - Off.

38. Upper console switches - As required.

a. ANTI COLLISION and POSITION LIGHTS switches - OFF.

b. Left panel light controls - OFF.

c. WINDSHIELD WIPER switch - OFF.

d. VENT BLOWER switch - OFF.

e. Right panel light controls - OFF.

39. APU generator switch - OFF.

40. FUEL PUMP switch - OFF.

41. APU CONTR switch - OFF.

NOTE

Prior to placing the BATT switch at OFF, wait approximately 5 seconds after placing APU CONTR switch at OFF to prevent the ESU from registering a dc power loss code.

42. BATT switch - OFF.

8-35. BEFORE LEAVING HELICOPTER.

1. Postflight.

a. Initiate OP RDY test - As required.

(1) If APU power is used, perform the following:

(a) BATT switch - ON.

(b) FUEL PUMP switch - APU BOOST.

(c) APU CONTR switch - ON.

(d) APU generator switch - ON, stabilator will move to full trailing edge down position upon application of ac power. Ensure stabilator area is clear prior to energizing stabilator system. Turret FLIR unit (TFU) will move through limits of travel as soon as ac power is applied to the aircraft. Ensure that the TFU area is clear of personnel prior to applying ac power to the aircraft.

(2) If external electrical power is used, EXT PWR switch - ON, then BATT switch - ON.

(3) Turn on all MFDs and avionics equipment. MMR, CW jammer, and Pulse jammer shall be placed in standby operation only.

(4) Initiate operational readiness (OP RDY) test:

(a) From any MFD, press WCA key to display caution summary page 1.

(b) Press L2 (EQP STAT SUMM) key to display equipment status summary page 1.

(c) Press L1 (OP RDY) key twice to initiate operational readiness test. (This test checks all avionics equipment that is IBIT compatible. This test takes approximately 18 to 20 minutes to complete. To abort test prior to completion, press L2 [TEST ABRT] key.)

(d) Continue with other checklist items while OP RDY test is being performed.

b. Nose Section (Area 1).

(1) Main rotor blades - Check.

(2) Refueling probe - Check attaching points for condition and security. Check nozzle and probe for indications of leaks.

WARNING

OP RDY test will cause the FLIR to self test. Exercise caution while inspecting the nose area.

(3) TFU - Check.

(4) MMR - Check.

(5) Landing and search lights - Check.

c. Cockpit Left Side (Area 2)

O (1) ETS, ejector rack locking levers locked, safety pins installed.

(2) Left engine oil level - Check.

d. Cabin Top (Area 3)

(1) Left engine inlet - Check clear of obstructions.

(2) Right engine inlet - Check clear of obstructions.

(3) Main transmission, rotor hub, and rotor blades - Check.

(4) BIM® indicators - Check.

e. Interior Cabin (Area 4)

O (1) Weapons system - Check condition and security, and verify weapon is safe.

(2) Transmission oil filter impending bypass indicator - Check.

f. Fuselage Left Side (Area 5)

Intermediate gear box - Check.

g. Tail Pylon (Area 6)

(1) Stabilator - Check condition.

(2) Tail rotor - Check condition.

(3) Tail rotor gear box - Check.

h. Fuselage Right Side (Area 7)

Avionics compartment air inlet - Check clear of obstructions.

i. Cockpit Right Side (Area 8)

(1) Right engine oil level - Check.

O (2) ETS, ejector rack locking levers locked, safety pins installed.

j. Cockpit Equipment Checks - As required.

(1) Check for completion of OP RDY test - As required.

(a) If test is complete, note/log equipment failure codes - Page 1 and Page 2 of the equipment status summary pages.

(b) Press MFD key T5 (SYST), then press MFD key L3 (EQP STAT).

(c) If failure codes were noted in a. above, press R5 (PG), R6 (PG), L1 (SEQ), or L2 (EQP) to sequence pointer next to equipment. Record PRESENT, PAST, and TEST status word bits for all failures and LRU callouts.

(d) Press R5 (PG) or R6 (PG) to get to equipment status page 1. Press L1 (SEQ) or L2 (EQP) to sequence pointer next to MP1 and press R3 (TEST) key twice to initiate MP IBIT. If failure codes are noted record PRESENT, PAST, and TEST status word bits for all failures and LRU callouts.

(2) Check aircraft status page.

(a) Note maintenance action for rotors, main transmission, or engines, if any is required.

(b) Record DECU1/DECU2 diagnostic messages.

(3) MFDs - Off.

(4) GENERATOR APU switch - OFF.

(5) FUEL PUMP switch - OFF.

(6) APU CONTR switch - OFF.

NOTE

Prior to placing the BATT switch at OFF, wait approximately 5 seconds after placing APU CONTR switch at OFF to prevent the ESU from registering a dc power loss code.

(7) BATT switch - OFF.

2. Mission equipment - Secure.

3. Complete DA Form 2408-12 and -13-1.

4. Secure helicopter - As required.

Section III INSTRUMENT FLIGHT

8-36. INSTRUMENT FLIGHT.

a. Refer to FM 1-240 for instrument flying and navigation techniques.

b. Pitot heat and anti-icing equipment, if installed, shall be on during operations in visible moisture with ambient temperature of 4°C (40°F) and below.

Section IV FLIGHT CHARACTERISTICS

8-37. GENERAL.

Refer to FM 1-203 Fundamentals of Flight for explanation of aerodynamic flight characteristics. The safe maximum operating airspeed range is described in Chapter 5. While hovering in high wind, sideward and rearward flight should be limited to low ground speeds. The helicopter is directionally stable in forward flight. In sideward and rearward flight, directional control is more difficult. During approach, or slow flight as the airspeed reaches about 17 to 20 KIAS, a mild vibration will be felt.

8-38. GROUND RESONANCE.

Ground resonance is a self-excited vibration created when a coupling interaction occurs between the movement of the main rotor blades and the helicopter. For this to happen, there must be some abnormal lead/lag blade condition which would dynamically unbalance the rotor and a reaction between the helicopter and ground, which could aggravate and further unbalance the rotor. Ground resonance can be caused by a blade being badly out of track, a malfunctioning damper, or a peculiar set of landing conditions. Ground resonance may occur when a wheel reaction aggravates an out-of-phase main rotor blade condition such as a hard one-wheel landing, resulting in maximum lead and lag blade displacement. This helicopter does not have a history of ground resonance. If it should occur, get the helicopter airborne. If this is not possible, immediately reduce collective pitch, place ENG POWER CONT levers OFF, and apply rotor brake and wheel brakes.

8-39. MANEUVERING FLIGHT.

8-40. FLIGHT WITH EXTERNAL LOADS.

WARNING

Static electricity generated by the helicopter should be discharged before attempting a sling or rescue hoist pickup. Use a conductor between helicopter and the ground to discharge the static electricity.

Caution must be exercised when transporting external loads that exhibit unstable characteristics. These loads may amplify any oscillation and cause the load to contact the aircraft.

Refer to FM 55-450-1.

8-41. FLYING QUALITIES WITH ETS INSTALLED.

a. Pitch Attitude Versus Airspeed. The ETS installation naturally results in increased drag. Since this drag vector is below the center of gravity of the helicopter, the pitch attitude will be more nose-down for any speed beyond 60 to 70 KIAS.

NOTE

The slight pitch down at 50 to 55 Kts (due to an airspeed system characteristic) is slightly exaggerated by the above two factors. At mid to high gross weights (and most especially at a forward CG) there is a slight pitch down at 50 - 55 KIAS. The installation of the ETS results in a small increase in this nose-down tendency.

b. Tank Vibration. It will be observed that the right hand tank will vibrate more than the left tank. This is a normal occurrence.

c. Stabilator Angle Versus Airspeed. With the increased drag of the ETS, a given airspeed will require more collective which, due to the collective to stabilator coupling, results in a more trailing edge down stabilator angle.

d. Roll Attitude Hold. With only the ETS wings installed, the roll attitude hold feature of the AUTO PLT is not noticeably affected.

e. Performance. The ETS, as mentioned previously, provides increased drag. Both the forward flight and hover performance (due to vertical drag from main rotor downwash) are adversely affected.

CAUTION

Extreme care should be exercised to maintain tank to ground clearance when landing in sloping or rough terrain.

f. Slope Landings. The ETS outboard tank may be a consideration in some rough area or slope landing operations.

Section V ADVERSE ENVIRONMENTAL CONDITIONS

8-42. GENERAL.

This section informs the crewmembers of the special precautions and procedures to be followed during the various weather and climatic conditions that may be encountered. This will be additional material to that already covered in other chapters regarding the operation of the various helicopter systems. Refer to FM 1-202 for cold-weather operations.

8-43. COLD-WEATHER OPERATION.

WARNING

Static electricity generated by the helicopter should be discharged before attempting a sling or rescue hoist pickup. In cold, dry climatic conditions static electricity buildups are large. Use a conductor between the helicopter and the ground to discharge the static charge. Delay lowering rescue hoist hook until helicopter is over the load, to lessen static charge buildup.

NOTE

During operation in cold weather, particularly when snow or moisture is present, the tailwheel locking indicating systems may give erroneous cockpit indications.

The basic helicopter with normal servicing can operate at temperatures down to -34°C (-29°F).

8-44. COLD WEATHER PREFLIGHT CHECK.

CAUTION

Ice removal shall never be done by scraping or chipping. Remove ice by applying heat or deicing fluid.

Blade deice operation with erosion strips installed may cause blade damage.

a. In addition to the checks in Section II check aircraft for ice or snow. If ice or snow is found, remove as much as possible by hand and thaw aircraft with heated air or deicing fluid before attempting start. Failure to remove ice and snow may cause damage.

b. Check main rotor head and blades, tail rotor, flight controls, engine inlets, and hand holds for ice and snow. Failure to remove snow and ice accumulations can result in serious aerodynamic, structural effects in flight and serious foreign object damage if ice is ingested into the engine. Check ENG POWER CONT levers for freedom of movement.

c. Aircraft with External Tank System. Check ETS and 230 gallon fuel tanks for ice or snow. Remove as much as possible by hand and then use heated air.

d. There are no weather restrictions for use of the refueling probe.

8-45. CONTROL EXERCISE.

The controls must be exercised when operating in a temperature range of -17°C (2°F) and below. The following control exercises are required:

a. After starting the APU.

(1) At temperatures between -17°C (2°F) and -31°C (-23°F), cycle collective control slowly for 1 minute.

(a) Move collective up about 3 inches from lower stop, and down again 30 times during 1 minute of control cycling in step (1).

(b) Move pedals alternately through 3/4 inch of travel from neutral position 30 times during 1 minute of control cycling in step (1).

(2) At temperatures between -31°C (-23°F) and -43°C (-45°F), move cycle collective slowly for 2 minutes.

(a) Move collective up about 1-1/2 inches from lower stop and down again during first minute, and 3 inches of travel during second minute of control cycling in step (2).

(b) Move pedals alternately through 3/8 inch of travel from neutral position during first

minute and 3/4 inch of travel during second minute of control cycling in step (2).

(3) At temperatures between -43°C (-45°F) and -54°C (-66°F), move cycle collective slowly for 5 minutes. Move collective and pedals through travel for times shown below:

Collective Travel (Approximately)	Pedals Travel (Approximately)	Time Duration
3/4 inch	1/8 inch	First minute
1-1/2 inches	1/4 inch	Second minute
1-3/4 inches	1/2 inch	Third minute
2-1/2 inches	5/8 inch	Fourth minute
3 inches	3/4 inch	Fifth minute

b. After Engine Start.

(1) At temperatures between -17°C (2°F) and -31°C (-23°F), warm up engine at IDLE for 3 minutes. During engine warmup, position cyclic control 1 inch forward of neutral and move tail rotor pedals alternately 3/8 inch during 3 minutes of warmup.

(2) At temperatures between -31°C (-23°F) and -43°C (-45°F), warm up engine for 3 minutes. During warmup, position cyclic control 5/8 inch forward, gradually increasing stick movement to 1-1/2 inches. Move each tail rotor pedal 1/8 inch, and gradually increase movement to 1/2 inch.

(3) At temperatures between -43°C (-45°F) and -54°C (-66°F), warm up engines for 5 minutes. During engine warmup, position cyclic control 1/2 inch forward of neutral, gradually increase stick movement to 1-1/2 inches. Move each tail rotor pedal 1/8 inch, and gradually increase movement to 5/8 inch. The specific requirements are as follows:

Forward Cyclic Stick Travel (Approximately)	Tail Rotor Pedal Travel (Approximately)	Time Duration
1/2 inch	1/8 inch	First Minute
3/4 inch	1/4 inch	Second Minute
1 inch	3/8 inch	Third Minute
1-1/2 inches	1/2 inch	Fourth Minute
1-1/2 inches	5/8 inch	Fifth Minute

8-46. ENGINE OPERATION.

a. Even though cold weather does not particularly affect the engine itself, it still causes the usual problems of ice in the fuel lines, control valves, and fuel sumps, which frequently prevent a successful cold weather start. It may be found that certain elements or accessories need preheating.

CAUTION

When starting an engine that has been exposed to low temperatures, watch for rise in ENG TEMP within 45 seconds. If no ENG TEMP rise is evident, manually, prime the engine and attempt another engine start. If there is no overboard fuel flow during prime, inspect for ice in the sumps and filters. During cold weather operation, allow longer warmup period to bring transmission oil temperature up to desired operating range refer to Chapter 5. Monitor oil pressure and temperature closely. When advancing the power control levers, maintain transmission oil pressure in normal operating range.

b. When starting in cold weather (below -40°C [-40°F]), if light-off does not occur within 10 seconds after initial indication of NG speed, quickly move ENG POWER CONT lever for the affected engine back to OFF, and then to IDLE detent three times, ending up at IDLE. If light-off still does not occur within 45 seconds, abort start and do the following:

(1) ENG POWER CONT lever(s) - Hold at LOCKOUT.

(2) FUEL BOOST PUMP CONTROL switches - ON, until crewmember reports fuel from overflow drain.

(3) FUEL BOOST PUMP CONTROL switches - OFF.

(4) ENG POWER CONT lever(s) - OFF.

(5) Attempt another start.

8-47. ENGINE OIL SYSTEM CHARACTERISTICS.

a. It is normal to observe high engine oil pressure during initial starts when the ambient temperature is 0°C or below. Run engine at idle until oil pressure is within limits. Oil pressure should return to the normal range after operating 5 minutes. However, time required for warmup will depend on temperature of the engine and lubrication system before start.

b. During starts in extreme cold weather (near -54°C [-66°F]), the following oil pressure characteristics are typical:

(1) Oil pressure may remain at zero for the first 20 to 30 seconds after initiating the start. Abort the start if oil pressure does not register within 1 minute after initiating a start.

(2) Once oil pressure begins to indicate on the power train page, it will increase rapidly and exceed the limit. This condition is normal. The time for oil pressure to decrease will depend on the ambient temperature, but should be normal within 5 minutes after starting the engine.

(3) Oil pressure may increase above the maximum pressure limit of 100 psig if the engine is accelerated above idle while oil temperature is within normal operating range. The pressure will decrease to within the normal operating range as the oil temperature increases.

c. It is normal for an OIL BYPASS caution message to be on when starting an engine with oil temperatures below normal, because of high oil viscosity and the accumulation of oil filter contaminants. When the engine oil temperature reaches about 38°C during warmup, the oil bypass caution message should go off.

8-48. ENGINE WARMUP AND CONTROL EXERCISE.

a. At temperatures between -17°C (2°F) and -43°C (-45°F), warm engines at IDLE for 3 minutes.

b. At temperatures between -43°C (-45°F) and -54°C (-66°F), warm engines for 5 minutes.

c. At temperatures between -43° (-45°F) and -54°C (-66°F), warm engines for 5 minutes. During engine warmup, position cyclic 1/2 inch forward of neutral, gradually increase stick movement to 3/4 inch. Move each tail rotor pedal 1/8 inch and gradually increase movement to 5/8 inch. The specific requirements are as follows:

Forward Cyclic (Approximately)	Pedal Travel (Approximately)	Time Duration
1/4 inch	1/8 inch	First minute
3/4 inch	1/4 inch	Second minute

8-49. TAXIING.

The helicopter should not be taxied until all engine temperatures and system pressures are within the normal range. All taxiing should be done at low speeds with wide-radius turns. If the tires are frozen to the surface, a slight yawing motion induced by light pedal application should break them free. Taxiing in soft snow requires higher than normal power.

8-50. DESERT AND HOT WEATHER OPERATION.

Prolonged hovering flight in hot weather (35°C) at higher gross weight may cause transmission oil temperature to rise into the yellow precautionary range. Hovering operations in the precautionary range under those conditions may be considered normal and the requirement for maintenance action in paragraph 5-12 does not apply.

8-51. TAXIING AND GROUND OPERATION.

CAUTION

When taxiing with aircraft gross weight within region B of Figure 5-8, adjust dual-engine torque to 25% or more to prevent surface contact with TFU, landing gear wire cutter/deflector, and radio antennas.

When performing these maneuvers, cyclic inputs should be minimized to prevent droop-stop pounding.

When taxiing over rough terrain, use extreme caution to avoid ground contact with the refueling probe or antennas underneath the helicopter.

Braking and ground operation should be minimized to prevent system overheating. During ground operations, if engine oil pressure falls into the red range when the power control lever is in the idle position and/or an engine oil

pressure low caution messages comes on when the power control lever is in the idle position, slightly advance the power control lever. If the engine oil pressure returns to the yellow range and the engine oil pressure caution message goes off, engine oil pressure is acceptable.

8-52. IN FLIGHT.

WARNING

When the engines are operating at low NG speeds with hot fuel (JP4), they are susceptible to fuel-low pressure/flameouts. Rapid collective changes and low-power settings should be avoided. FUEL BOOST PUMP CONTROL panel switches shall be turned ON when hot fuel limitations are exceeded.

Refer to paragraph 5-19, Hot Fuel Limitations, when JP4 is used.

8-53. THUNDERSTORM OPERATION.

CAUTION

Avoid flight in or near thunderstorms, especially in areas of observed or anticipated lightning discharges.

a. Tests have shown that lightning strikes may result in loss of automatic flight controls (including stabilator), engine controls or electrical power. The high currents passing through the aircraft structure are expected to produce secondary effects whereby damaging voltage surges are coupled into aircraft wiring.

b. If a lightning strike occurs whereby all aircraft electrical power and electronics subsystems and controls are lost (including the engine DEC and the engine-driven alternator), both engines go immediately to maximum power with no temperature limiter or overspeed protection. In addition, engine overspeed may result in single or dual engine shutdown without automatic relight. Accordingly, flight crew would have to react instantly to retard the ENG POWER CONT levers to idle and enter autorotation. The crew could then slowly increase the ENG POWER CONT levers and restore power by sound and feel, since all engine instruments and all of the engine automatic control functions would be inoperative.

8-54. TURBULENCE.

a. Recommended maximum turbulence penetration airspeeds. For moderate turbulence, limit airspeed to the MAX RANGE (Chapter 7) or Vne minus 15 knots, whichever is less.

b. In turbulent air - Maintain constant collective and use the vertical situation display (VSD) as the primary pitch instrument. The altimeter and vertical velocity indications may vary excessively in turbulence and should not be relied upon. Airspeed indication may vary as much as 40 KIAS. By maintaining a constant power setting and a level-flight attitude on the VSD, airspeed will remain relatively constant even when erroneous readings are presented by the airspeed indicator.

8-55. ICE AND RAIN OPERATION.

CAUTION

At airspeeds greater than 120 KIAS or during periods of reduced rain intensity, windshield wipers may slow noticeably. If one of the above conditions occurs, wipers must be parked immediately to avoid permanent wiper motor failure.

Prior to entering rainy weather conditions, ensure wipers are operational.

8-56. IN-FLIGHT ICING.

CAUTION

At airspeeds greater than 120 KIAS or during periods of reduced rain intensity, the windshield wipers may slow noticeably. If this occurs, wipers must be parked immediately to avoid permanent wiper motor failure.

Activation of anti-ice systems after entry into potential icing conditions creates the possibility of engine FOD caused by ice shedding. The ice detector has been designed primarily as a sensor to indicate the requirement for activation of the blade deice system.

a. All anti-ice systems must be turned on prior to entering visible moisture at ambient temperatures of 4°C (40°F) or less.

b. If icing conditions are encountered, turn on all anti-icing equipment immediately. If torque required increases 20% above that required for level flight at the airspeed being maintained before entering icing, exit the icing environment or land as soon as possible. A 20% torque increase indicates that normal autorotational rotor rpm may not be possible, should dual-engine failure occur.

c. When the helicopter is equipped with an operating blade deice, and icing conditions are encountered, a recurring torque increase up to 14% per engine may be experienced during normal operation of the blade deice system because of ice buildup. The crew should closely monitor engine instruments to prevent exceeding limits and/or rotor droop. Significant power losses and increased fuel consumption will occur with the activation of blade deice and/or engine inlet anti-icing systems. Refer to Chapter 7 for torque available. The main rotor hub and the blades collect ice before initiation of a deice cycle. When enough ice has collected on the blades, moderate vibration levels of short duration can be expected in controls and airframe during normal deicing cycles. If the blade deice system is not operating, unbalanced loads of ice, resulting from asymmetric shedding, may cause severe vibrations. However, these vibrations normally subside after 30 to 60 seconds when ice from other blades has shed.

8-57. GROUND OPERATIONS.

a. Strong gusty winds may cause increased flapping of the main rotor blades during shutdown following an icing encounter, because the anti-flap restrainers may be frozen in the fly position.

b. During flight in icing conditions when droop stop heaters are not installed or fail to operate properly, the droop stop hinges may become iced, resulting in the droop stops not returning to the static position during rotor coast down. When droop stops do not return to the static position, the main rotor blades may droop to within 4 feet of the ground during shutdown. Strong gusty winds may also cause excessive flapping of the main rotor blades, presenting the additional hazard of potential contact with the aft fuselage. If the droop stops are suspected to be stuck in the fly position, caution must be taken during shutdown to be sure personnel remain clear of the helicopter.

8-58. CROSSWIND/SIDEWARD FLIGHT OPERATION - HIGH ALTITUDE/HEAVY WEIGHT.

Operations while hovering in a 15 to 25 knot right crosswind or during a 15 to 25 knot right sideward flight under conditions of high gross weight and high altitude can result in momentary contact of the left pedal stop. The occurrence is caused by rotor and airframe aerodynamic interaction, particularly in ground effect, which results in increased pilot directional control pedal motion activity. For conditions of 0 to 5 knots and 25 knots to maximum allowable, the pilot pedal activity decreases as the rotor and airframe interaction is substantially reduced or eliminated. In left sideward flight conditions or while hovering in a left crosswind, pedal motion activity can be just as high in the 15 to 20 knot speed range. This is due to the tail rotor crossing through the region where thrust direction changes. This normally is not a problem; however, as more right directional control margin is available due to the increased left pedal anti-torque requirements for the heavy/high conditions.

Section VI SHIPBOARD OPERATIONS

8-59. INTRODUCTION.

Shipboard operational procedures will be standardized. CV NATOPS manual, NWP-42 series (Shipboard Helicopter Operating Procedures), Unit Standard Operating Procedures and ATM will be utilized as appropriate.

8-60. EMITTER HAZARDS.

Refer to Warning Pages for MH-60K hazards and request shipboard radiation hazards and procedures prior to landing.

8-61. CV FLIGHT DECK OPERATIONS.

8-62. HELICOPTER MOVEMENT.

a. Officer of the Deck (OOD) approval is required prior to helicopter movement. Request for permission to move the helicopter should be made well in advance so the OOD can maneuver the ship to achieve the most stable deck.

b. A minimum of 15 men for manual moves is required as follows:

(1) Director (1).

(2) Brake rider (1), strapped in and wearing inflatable life vest.

(3) Tailwheel steering bar (1).

(4) Main mount chock/chain men (2).

(5) Tailwheel chain men (2).

(6) Pushers (8).

c. Whenever the officer in charge of the helicopter detachment determines that weather and/or ship's roll/pitch require more personnel to move the helicopter, that officer shall request additional assistance from the ship's force. However, additional personnel will significantly increase the supervisory requirements.

d. During high sea states, safety nets may be raised prior to helicopter movement.

e. The director should maneuver the aircraft into/out of the hangar at a slow and controllable rate of speed. When the ship is unstable, consideration should be given to alternatively attaching and removing the chains during helicopter movement. A brake check shall be performed immediately after initial helicopter movement. When positioning the helicopter for takeoff, the main landing gear should be in the center of the landing circle and the tailwheel on the desired line up line.

f. The helicopter should always be properly secured unless it is being positioned for launch, at which time two tiedowns are to be attached to each main landing gear and one tiedown to each side of the tailwheel.

g. The movement is not complete until the director notifies the OOD of the helicopter's ultimate position and security.

h. At night, all available lighting should be used during helicopter movements.

8-63. BLADE/PYLON FOLDING/SPREADING.

CAUTION

At any time blades are to be spread or folded aboard ship, personnel shall act as blade walkers while the blades are in motion, to prevent excessive blade flapping which could result in the blade tips striking the deck. At night, blades should be spread or folded upon signal from the flight deck director (FDD), indicating that the blade walkers are in position and the area is clear. The blade walkers should be equipped with red flashlights.

Conduct lockpin and pitch lock pin status check after blade spread.

The maximum safe nonturbulent winds relative to the helicopter for rotor folding/spreading is 45 knots and for pylon folding/spreading is 30 knots, except in an emergency situation.

8-64. SHIPBOARD WIND LIMITS.

Refer to Performance Charts and NWP-42 series.

8-65. HELICOPTER STARTUP.

Starting will normally be accomplished only upon a signal from the LSE and clearance by the OOD. The helicopter normally uses APU power for starting.

8-66. ROTOR ENGAGEMENT.

WARNING

To avoid the possibility of helicopter damage or personnel injury, the ship shall not change course or speed during engagement/disengagement. However, emergency conditions may require a course and/or speed change, in which case, immediate notification to the pilot is mandatory.

a. Rotor shall be engaged only on signal from the LSE. Mandatory requirements for engagement of rotors shall consist of the following items:

(1) Tail and main-mount tiedowns secured with 2 to 3 inches of slack and with chocks in place.

(2) Flight deck clear of unnecessary personnel.

(3) Tailwheel locked, PARKING BRAKE on.

(4) Winds for engagement within limitations.

(5) Helicopter rotors shall not be engaged (or disengaged), nor shall the helicopter be launched (or recovered) while the ship is turning.

WARNING

Personnel shall be kept clear of tip path plane during rotor engagement or disengagement.

When the helicopter is on the flight deck with the rotors engaged, the cyclic stick should be held in the neutral position. Attempting to maintain the tip-path plane parallel to the horizon on a rolling, pitching deck can be hazardous to flight deck personnel and may cause unnecessary stresses on the droop stops.

b. When directed by the OOD following an up status signal from the pilot, tiedowns will be removed. The pilot in command is responsible to assure complete removal of tiedowns before takeoff. Helicopters should be launched in order from forward to aft. Helicopters shall not be launched over other aircraft.

8-67. LAUNCH AND RECOVERY PROCEDURES.

8-68. GENERAL.

a. Air capable ship flight operations present problems not generally associated with other aviation ships. The small deck area, pitch and roll, obstructions, and wind turbulence combine to make these operations hazardous. Furthermore, ground handling poses an additional hazard to the aircraft and personnel.

b. Launch and recovery operations, signals, and procedures shall be in accordance with briefed operating procedures.

c. Wind limitations for launch and recovery operations are defined by ship class in NWP-42. The helicopter shall be launched and recovered within the limits of the prescribed wind envelope to preclude damage or loss. Launch and recovery shall not be attempted while the ship is turning.

d. In selecting optimum wind conditions, several factors must be considered: turbulence, pitch and roll, pilot experience, minimum wind over deck for hover out of ground effect and minimum safe single engine speed. A turbulent wind is more hazardous than a nonturbulent wind, even though the latter may be of high velocity. Turbulence can result from a smooth wind flowing over and around the ship's superstructure.

e. Each helicopter shall be under the positive control of an OOD, LSE, flight deck director (FDD), or landing safety officer (LSO) for all flight deck operations. Standard helicopter hand signals in accordance with CV NATOPS Manual and NWP 50-2 shall be used and acknowledged.

WARNING

In crosswind conditions, relative to the ship's fore and aft axis, the indicated winds in flight often vary from those winds actually experienced at the flight deck level. Wind velocity, direction, and turbulence are critical for safe launches and recoveries.

To avoid the possibility of helicopter damage or personnel injury, the ship shall not change course or speed during launch/recovery. However, emergency conditions may require a course and/or speed change, in which case, immediate notification to the pilot is mandatory.

f. Optimum wind and deck conditions will be provided the FDD or helicopter control officer (HCO). The term takeoff is defined as the action of lifting from the deck culminating in hovering, forward flight, or sideward flight. The terms takeoff, liftoff, and launch are synonymous. The term landing is the maneuver of physically positioning the helicopter on the deck following forward or hovering flight. The terms landing and recovery are synonymous. The helicopter shall be launched and recovered within the relative wind limits on VFR flights. Night and IFR launches and recoveries shall be made with the nose of the helicopter oriented forward and parallel to the centerline of the angle or axial deck. The relative winds shall not exceed the established wind limit parameters. Except in unusual situations, the upwind helicopter shall be launched first.

NOTE

The LSO should anticipate the launch request from the aircraft, and request clearance accordingly. The bridge/CIC shall pass the base recovery course (BRC), true wind, and altimeter setting to the LSO and indicate clearance to launch on the bridge information display.

g. When the aircraft is ready to launch, the pilot shall notify the LSO, at which time the LSO shall request clearance via the appropriate bridge information display lights. Table 8-1 contains the launch sequence and deck status light signals.

h. Before clearing the aircraft to launch, the LSO shall:

(1) Ensure all tiedowns have been removed.

(2) Ensure all electrical cords are disconnected.

(3) Check the flight deck and airspace to ensure that it is safe to launch. (The HCO shall check the portion of airspace not visible to the LSO.)

(4) Ensure the relative wind is within limits.

(5) Pass to the aircraft: Pitch, roll and relative wind (EMCON permitting).

(6) Provided the deck remains steady, the LSO then clears the aircraft for takeoff. As soon as the helicopter is off the deck, the LSO shall inform the pilot whether or not the aircraft is all clear.

i. When launching, establish a hover about 10 feet above the deck, then transition to forward flight. Helicopters should clear the ship expeditiously to reduce the hazard to flight deck personnel. Helicopters shall not cross the bow or stern within 1 mile unless cleared or in an emergency.

j. After the helicopter departs, the LSO shall remain at his station until communications have been established between the ship and the aircraft.

k. Complete the postlaunch checklist.

CAUTION

The pilot in command shall make sure that the landing check list is completed before starting any approach any ship in case of an emergency or other unscheduled landing.

NOTE

Pilots should be aware when operating in vicinity of island/bridge structures, the ship's fog horns may induce airframe and flight control vibrations and rumbling noises.

Due to the reduced obstruction clearances and the pilot's restricted field-of-view, the pilot nearest the hangar face should be at the controls for landing.

l. Downwind approaches shall not be made except under emergency conditions.

m. Helicopters should not cross the deck edge on an approach until cleared to do so by the LSE.

n. When finally on deck, the pilot not on the controls signal for chocks and tiedowns to be applied and then completes the POST LANDING.

o. After chocks and tiedowns have been attached the helicopter will be shut down upon signal from the FDD.

p. On signal from the pilot, the HCO should request and receive permission to disengage and fold. The ship shall not turn while rotors are disengaging.

Table 8-1. Launch Sequence and Deck Status Lights

CONDITION	VOICE CALL	RESPONSE	SIGNAL
1A. Pilot completed with prestart checks	Pilot: starts APU, and completes control checks. Pilot: READY TO START AND ENGAGE	LSO: Requests clearance for engine start and engagement from bridge	* Deck status light - RED. Aircraft: Position lights - STEADY BRIGHT (day), STEADY DIM (night). Upper anticollision light - ON
1B. Bridge gives clearance for engine start and engagement	LSO: CLEARED TO START ENGINES	Pilot: Starts aircraft engines	LSE: Signals pilot to start engines
1C. Pilot complete with preengagement checks	Pilot: READY TO ENGAGE ENGAGE		* Aircraft: Position lights - FLASHING BRIGHT (day), FLASHING DIM (night). Rotor head light - ON (night)
1D. LSO gives clearance for rotor engagement	LSO: CLEARED FOR ENGAGEMENT	Pilot: Engages rotor, completes prelaunch checks and signals LSE to remove external power and tiedowns	Deck status light: AMBER
2. Pilot completed with prelaunch checks, verifies external power and tiedowns removed. LSE clears flight deck	Pilot: READY TO LIFT LIFT	LSO: Requests clearance from bridge, verifies external power and tiedowns removed. Ensures LSE clear of deck	* Deck status light: AMBER. Aircraft: Position lights - STEADY BRIGHT (day); STEADY DIM (night)
3. Bridge gives clearance for aircraft launch	LSO: ALTIMETER, TRUE WIND, BRC, PITCH, ROLL, RELATIVE WIND, UP TAIL PROBE	Crewmember raises tail probe when requested	Aircraft lighting as required
4. LSO sights tail probe is down, verifies wind/deck conditions are within envelope	LSO: BEAMS OPEN, GREEN DECK LIFT	Pilot: Pilot lifts off, establishes hover	Deck status light: GREEN
5. Aircraft in hover LSO makes visual check of aircraft	LSO: ALL CLEAR	Pilot: Pilot checks performance instruments, deck status lights, and depart deck	Deck status light: GREEN, if aircraft is all clear. RED if aircraft is fouled
6. Aircraft departs on mission	LSO: CONTROL YOU HAVE CONTROL OF AIRCRAFT	Ship controller responds HE HAS CONTROL and requests pilot's report. Pilot status report to controller	Deck status light: RED, When OPS NORMAL is given

NOTE: * Aircraft lighting procedures may be modified as defined by mission constraints. Modification for aircraft lighting will be briefed prior to flight.

8-69. WAVEOFF PROCEDURES.

A waveoff signal is mandatory at all times. Pilot's must use extreme caution to avoid overflying other helicopters and fixed-wing aircraft parked or turning up on deck while executing a waveoff. Reentry into a landing pattern shall be prescribed by the controlling authority.

8-70. LANDING CONSIDERATIONS.

Helicopters should be landed within 10° of the relative wind. The pilot should cross the deck edge at least 15 feet above the flight deck to compensate for the pitch and/or roll of the deck and the ever present turbulence in this area.

8-71. DAY OPERATIONS.

IAW Aircrew Training Manual and current Unit Standard Operating Procedures.

8-72. NIGHT/NVG OPERATIONS.

In accordance with the Aircrew Training Manual and current unit SOPs.

8-73. RECOVERY SIGNALS.

a. Helicopter recovery signals are as follows:

(1) Voice: Charlie (number), meaning length of time in minutes before carrier will be able to take helicopters aboard. Upon receipt of Charlie (number), all helicopters in the holding pattern (VFR) will establish proper interval for landing. This procedure will reduce the time the carrier must remain into the wind and expedite the recovery.

Flag: Hotel at the dip.

(2) Voice: Charlie, meaning land helicopters.

Flag: Hotel closeup.

(3) Hotel at the dip indicates the ship is preparing to conduct helicopter operations. Hotel closeup indicates the ship is conducting helicopter operations and constitutes a Charlie signal during periods of radio silence. The Charlie signal should also be passed by flashing light to helicopters which are not in a position to observe the flag hoist. Receipt of either signal constitutes the pilot's authority to start a landing approach.

b. The OOD should designate numbered deck spots to be used before Charlie. Individual directors (LSE's) thus will be readily sighted and landing interval may be reduced.

8-74. PRESSURE REFUELING ABOARD SHIP WITH THE ROTORS ENGAGED.

During shipboard operations, tactical situations may occur which will require the helicopter to be refueled with both engines running and the rotors engaged. Hand signals shall be in accordance with CV NATOPS Manual and NWP 50-2.

8-75. GENERAL SAFETY PRECAUTIONS.

a. Secure the helicopter with two chocks and initial four-point tiedown. Fueling personnel shall not approach the helicopter until it is properly chocked.

b. All fuel personnel must be thoroughly indoctrinated in the contents of NAVWEPS 06-5-502, Aircraft Refueling, pertinent type commanders instructions, and the carriers refueling instructions.

c. All movements from one side of the helicopter to the other shall be via the nose. Under no circumstances will any personnel work in close proximity of the tail rotor.

d. All personnel working under the main rotors are to use extreme caution.

e. Refueling shall be stopped when any fuel spillage is noted and not started until the spillage is wiped up.

f. The fueling hose shall be connected and disconnected from the helicopter with the hose in an evacuated condition.

8-76. DUTIES OF PERSONNEL.

a. Fueling station operator.

(1) Energize and de-energize the fueling station upon signal of the pilot.

(2) Continuously watch the plane director for signals.

b. LSE.

(1) In charge of the refueling party.

(2) Stand beyond rotor diameter where the pilots, fueling station operator, and the nozzle connect/disconnect person can be observed.

(3) Make sure the pressure refueling nozzle is connected and that all personnel are ready for pressure refueling. LSE must get a thumbs up from the pilot, nozzle person, and fire extinguisher operator before signaling the fueling station operator to energize the fueling station.

(4) Monitors refueling operation and stops refueling upon the first indication that an unsafe condition exists. Refueling will normally be secured when the high-level shutoff valve is actuated or when prebriefed amount of fuel has been added.

(5) Signal the fueling station operator to evacuate the hose and de-energize the fueling station.

(6) Upon completion of 5 above, signal the nozzle person to unplug the pressure refueling nozzle.

(7) Be sure all refueling personnel, equipment, chocks, and tiedowns are clear before giving the launch signal to the pilot.

c. Nozzle connect/disconnect person.

(1) Stand by the fueling station to assist the hose person in pulling the refueling hose to the helicopter.

(2) Attach the nozzle to the pressure refueling connection.

(3) Nozzle person will signal the pilot when ready to start pressure refueling.

(4) As the hose is pressurized, nozzle person activates the flow control handle. As fuel flow starts, hose person will test the primary and secondary high-level shutoff switches to be sure they will secure the fuel flow. If neither switch will secure the fuel flow, then pressure refueling must be discontinued at once. If one of the switches will secure the fuel flow, then pressure refueling may be continued with caution.

(5) When refueling is completed and upon the signal from the pilot, the nozzle person will close the flow control handle, secure the helicopter pressure refueling connection cover, and lay the nozzle under the fuselage.

(6) Nozzle person will help the hose person retrieve the hose and secure it at the fueling station.

d. Fire extinguisher operator.

(1) Attach the grounding wire from the helicopter to the flight deck.

(2) When the refueling hose is brought to the aircraft, fire extinguisher operator will take a position near the pressure refueling panel.

(3) Signal the pilot when ready for pressure refueling to start.

(4) At the first sign of a fire, fire extinguisher operator will activate the fire extinguisher and direct it on the fire.

(5) Remains near pressure refueling panel until the hose is disconnected and removed from the vicinity of the helicopter. Fire extinguisher operator disconnects grounding wire between the helicopter and the flight deck, and remove the fire extinguisher bottles.

e. Hose person.

(1) Stand by the refueling station to take the hose to the helicopter.

(2) Pass the hose to the nozzle person.

(3) Stays until refueling is completed, then with help from the nozzle person, remove the hose and return it to the fueling station.

f. Pilots.

(1) The pilots shall accomplish the following:

(a) Set FUEL MGT panel switches as required for pressure refueling.

(b) Monitor the collective and cyclic.

(c) Monitor engine instruments for any unusual indications. If anything is noticed which would jeopardize the safety of the refueling operation, do not proceed with refueling operation.

(d) When ready for the refueling to start, signal the plane director.

(e) Watch the LSE for an emergency cut signal.

(f) Signal the LSE if the prebriefed amount of fuel has been added.

(g) If an emergency cut signal is received, secure both power control levers, apply the rotor brake, instruct the crew to abandon the helicopter while securing all electrical power in the helicopter.

WARNING

After refueling has been completed and the fuel hose is returned to the fueling station, and before signaling ready for launch, the pilot in command shall ensure all hatches and personnel doors are secured and the takeoff checklist has been completed.

(h) Set FUEL MGT panel switches as required.

(2) Crewmembers.

(a) After tiedowns are attached and chocks are in place, and upon order from the pilot in command, crewmember will open the personnel door.

(b) When not involved elsewhere in the aircraft (i.e., monitoring the refueling, checking equipment, etc.), crewmember should remains strapped in and be prepared to abandon the helicopter upon direction.

CHAPTER 9
EMERGENCY PROCEDURES

Section I AIRCRAFT SYSTEMS

9-1. AIRCRAFT SYSTEMS.

This section describes the helicopter systems emergencies that may reasonably be expected to occur and presents the procedures to be followed. Emergency operation of mission equipment is contained in this chapter, insofar as its use affects safety of flight. Emergency procedures are given in checklist form when applicable. A condensed version of these procedures is contained in the condensed checklist TM 1-1520-250-CL.

9-2. IMMEDIATE ACTION EMERGENCY STEPS.

NOTE

The urgency of certain emergencies requires immediate and instinctive action by the pilot. The most important single consideration is aircraft control. All procedures are subordinate to this requirement. The MASTER CAUTION and voice warning system (VWS) should be reset after each malfunction to allow systems to respond to subsequent malfunctions. If time permits during a critical emergency, press SOS switch on CDU or GD/EMER switch on lower ZEROIZE/EMERGENCY panel, transmit MAYDAY call, jettison external fuel tanks, and lock shoulder harnesses.

Those steps that must be performed immediately in an emergency situation are underlined. These steps must be performed without reference to the checklist. Nonunderlined steps should be accomplished with use of the checklist.

9-3. DEFINITION OF EMERGENCY TERMS.

a. LAND AS SOON AS POSSIBLE is defined as landing at the nearest suitable landing area (e.g., open field) without delay. (The primary consideration is to ensure the survival of occupants.)

b. LAND AS SOON AS PRACTICABLE is defined as landing at a suitable landing area. (The primary consideration is the urgency of the emergency.)

c. AUTOROTATE is defined as adjusting the flight controls as necessary to establish an autorotational descent and landing.

d. EMER ENG SHUTDOWN is defined as engine shutdown without delay. Engine shutdown in flight is not usually an immediate-action item unless a fire exists. Before attempting an engine shutdown, identify the affected engine by checking ENG OUT warning lights and the engine instrument display page TQ, ENG TEMP, NG, NP, and OIL PRESS indicators. The procedure for EMER ENG SHUTDOWN is as follows:

(1) ENG POWER CONT lever(s) - OFF.

(2) ENG FUEL SYS selector - OFF.

CAUTION

If ENG TEMP rises above 468°C after shutdown, place AIR SOURCE HEAT/START switch as required, turn ENGINE IGNITION switch to OFF, and press starter to motor engine for 30 seconds or until ENG TEMP decreases below 468°C.

e. LOCKOUT is defined as manual control of engine rpm while bypassing DEC functions. Bypass of the engine control will be required when NP 1 or NP 2 decreases below normal demand speed. The procedure for lockout is as follows:

CAUTION

When engine is controlled with engine power control lever in lockout, engine response is much faster and engine temperature limiting system is inoperative. Care must be taken not to exceed ENG TEMP limits while keeping NR, NP 1, and NP 2 within their normal operating range.

ENG POWER CONT lever - Pull down and advance full forward, while maintaining downward pressure, immediately retard to avoid overspeed, then adjust to set NR as required. Engine control malfunctions can result in NR increasing or decreasing from normal demand speed. Under certain failure conditions, TQ, NP, and NG may not be indicating and the possibility of the ENG OUT warning light and audio activating exists. The most reliable indication of engine power will be ENG TEMP.

f. EMER APU START is defined as APU start to accomplish an emergency procedure. The procedure for EMER APU START is as follows:

(1) FUEL PUMP switch - APU BOOST.

(2) APU CONTR switch - ON.

9-4. AFTER EMERGENCY ACTION.

After a malfunction of equipment has occurred, appropriate emergency actions have been taken and the helicopter is on the ground, an entry shall be made in the Remarks Section of DA Form 2408-13 describing the malfunction. Ground and flight operations shall be discontinued until corrective action has been taken.

9-5. EMERGENCY EXITS.

a. Emergency exits are shown in Figure 9-1. Emergency exit release handles are yellow and black striped.

b. Each cockpit door is equipped with a jettison system for emergency release of the door assembly. The jettison system releases door hinge pins and disconnects the laser warning receiver cannon plug connector (Figure 9-1). Jettison is done by pulling a handle marked EMERGENCY EXIT PULL, on the inside of the door. To release the door and disconnect the cannon plug, pull the jettison handle to the rear; the door may then be pushed or kicked at the lower front corner of the door for removal.

c. Each cabin door is equipped with two jettisonable windows. To release the windows, handles (under jettison lever guards) marked EMERGENCY EXIT PULL AFT (left side) and EMERGENCY EXIT PULL FWD (right side) on the inside of the cabin door (Figure 9-1) are moved in the direction of the arrows, releasing the windows. The windows can then be pushed out.

9-6. EMERGENCY EQUIPMENT (PORTABLE).

Emergency equipment consists of two hand-held fire extinguishers, one crash axe, one emergency locator transmitter, and three first aid kits as shown in Figure 9-1.

9-7. ENGINE MALFUNCTION - PARTIAL OR COMPLETE POWER LOSS.

WARNING

Prior to movement of either ENG POWER CONT lever, it is imperative that the malfunctioning engine and the corresponding ENG POWER CONT lever be identified.

The indications of engine malfunction, either partial or complete power loss, may be as follows: Changes in affected engine rpm, change in rotor rpm, low rotor and/or engine out audio and voice warning, illumination of the LOW ROTOR RPM and/or ENG OUT warning lights, change in engine noise, and left yaw. The indications will depend on the specific malfunction, e.g., compressor stall as opposed to complete power loss on both engines.

9-8. FLIGHT CHARACTERISTICS.

The flight characteristics and required crew member control responses after a dual engine failure are similar to those during a normal power-on descent. Full control of the helicopter can be maintained during autorotational descent. When one engine has failed, the helicopter can often maintain altitude and airspeed until a suitable landing site can be selected. Whether or not this is possible becomes a function of such combined variables as aircraft weight, density altitude, and height above ground and airspeed at the time of the engine failure. Crew member response time and control technique may be additional factors.

9-9. SINGLE ENGINE FAILURE - GENERAL.

Proper response to an engine failure depends on various factors: density altitude, airspeed, aircraft weight, single engine performance, and environmental conditions. The light regions in the height velocity avoid region diagrams (Figure 9-2) define the airspeed and wheel height combinations that will permit a safe landing in event of an engine failure for various gross weights at both sea level 15°C, and 4,000 feet/35°C ambient condition. Crew member recognition of a single engine failure and subsequent actions are essential and should be based on the following general guidelines. At low altitude and low airspeed, it may be necessary to lower the collective only enough to maintain NR at a value less

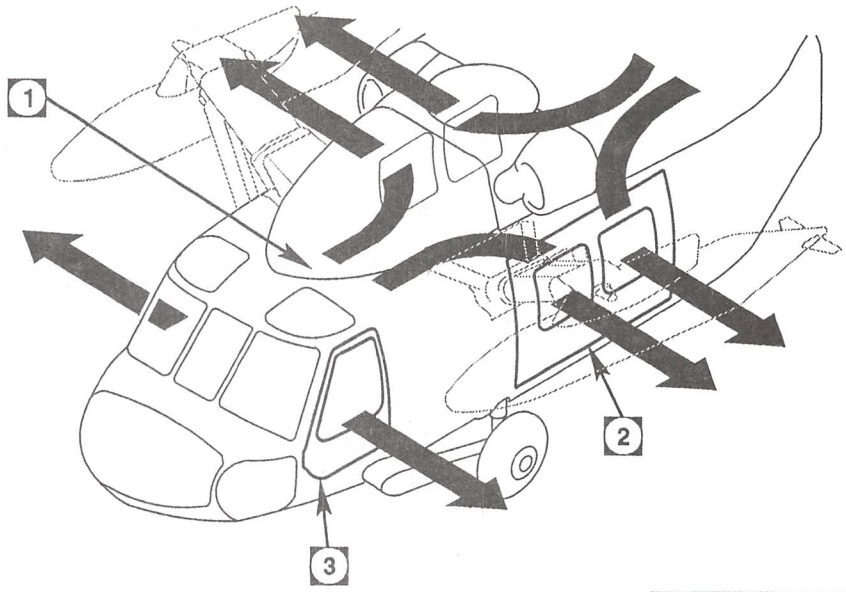

HANDLE MUST BE IN "CLOSE" POSITION BEFORE CLOSING DOOR

CABIN AND COCKPIT DOORS EXTERIOR HANDLE

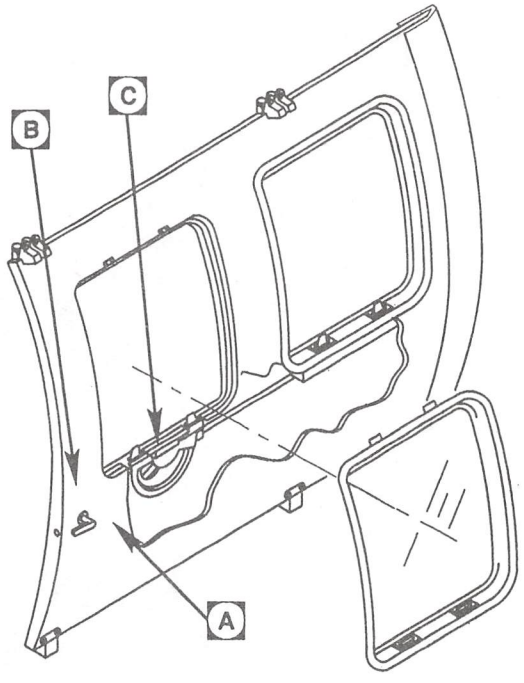

CABIN DOOR

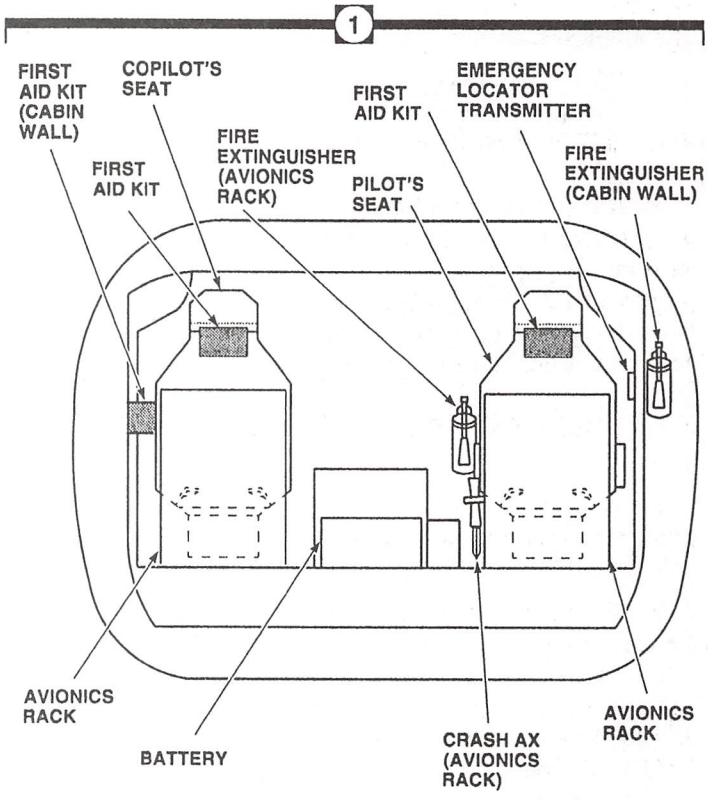

VIEW LOOKING FORWARD

AK0074_1
SA

Figure 9-1. Emergency Exits (Sheet 1 of 2)

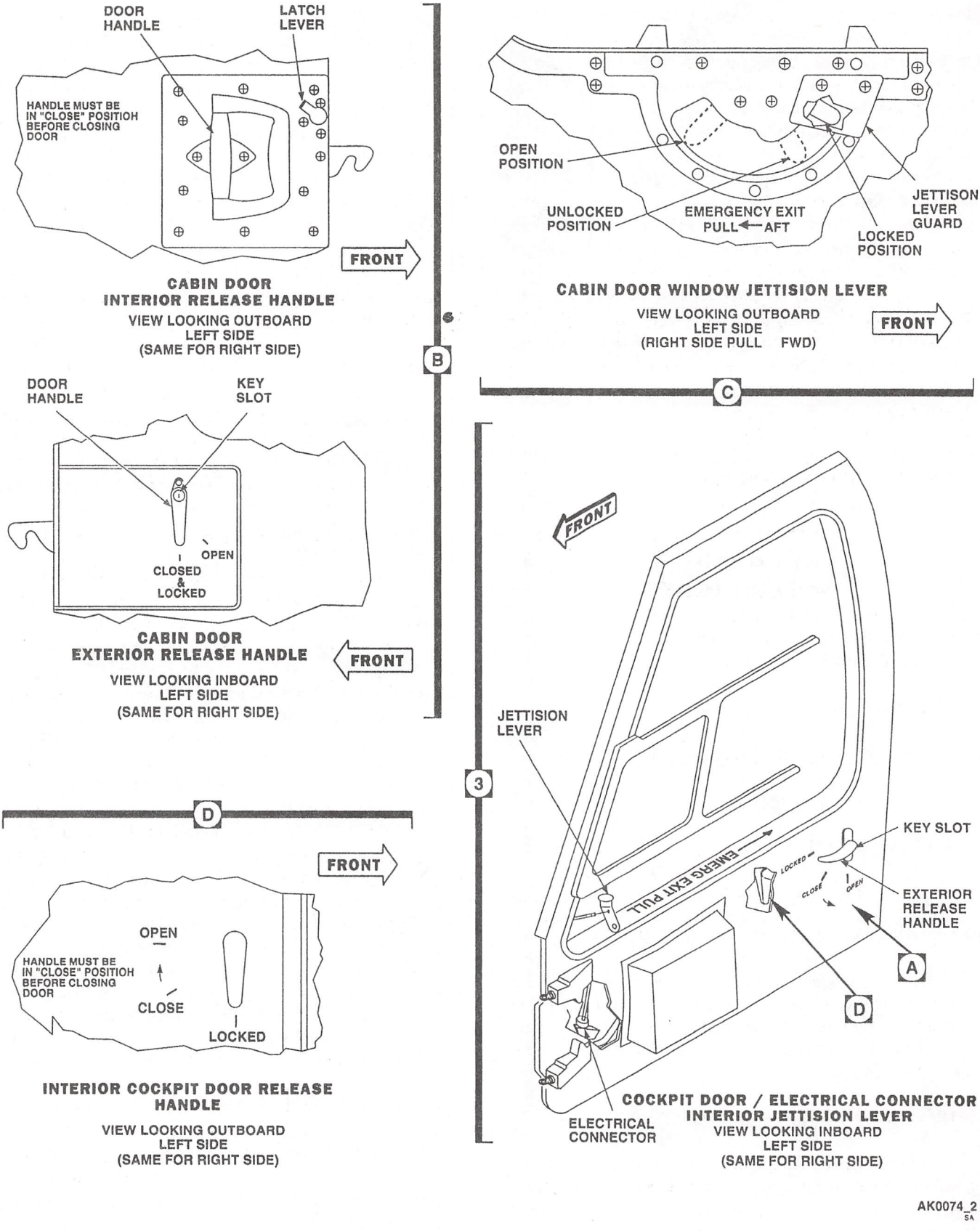

Figure 9-1. Emergency Exits (Sheet 2 of 2)

than 100 percent. At higher altitude, the collective may be lowered significantly to increase NR to 100 percent. When hovering in ground effect, the primary consideration is in maintaining a level attitude and the collective should be used only as required to cushion the landing. In forward flight at low (as in takeoff) airspeed, when a single engine capability to maintain altitude does not exist, a decelerating attitude will initially be required to prepare for landing. Conversely, if airspeed is low and altitude sufficient, the helicopter should be placed in an accelerating attitude to gain sufficient airspeed for single engine flyaway to a selected landing site. When the power available during single engine operation is marginal or less, consideration should be given to jettisoning the external fuel tanks. The engine anti-ice and cabin heater switches should be turned off as necessary to ensure maximum power is available on the remaining engine. After an engine failure has occurred, an EMER ENG SHUTDOWN should be performed on the affected engine if time permits.

9-10. SINGLE ENGINE FAILURE LOW ALTITUDE/ LOW AIRSPEED AND CRUISE.

WARNING

Do not respond to engine out audio, VWS message, and warning light until checking ENG TEMP and NR indicators.

If continued flight is not possible:

1. Jettison external fuel tanks (as necessary).
2. Land as soon as possible.

If continued flight is possible:

3. Land as soon as practicable.

9-11. ENGINE RESTART DURING FLIGHT.

After an engine failure in flight, an engine restart may be attempted. If it can be determined that it is reasonably safe to attempt a start, the APU should be used. Use of a cross-bleed start could result in a power loss of up to 18% on the operational engine.

9-12. DUAL ENGINE FAILURE - GENERAL.

If both engines fail, immediate action is required to make a safe autorotative descent. The altitude and airspeed (Figure 9-3) at which a two-engine failure occurs will dictate the action to be taken. After the failure, main rotor rpm will decay rapidly and the aircraft will yaw to the left. Unless a two-engine failure occurs near the ground, it is mandatory that autorotation be established immediately. During cruise, reduce collective immediately to regain NR and then adjust as required to maintain NR within power off rotor speed limits. The cyclic should be adjusted as necessary to attain and maintain the desired airspeed. Variations in rate of descent (R/D) with gross weight and airspeed (Figure 9-3) are derived from nominal flight conditions and 100% NR. Variations in R/D of up to ±300 fpm may result from flight conditions above or below nominal. The recommended airspeed for autorotation is 80 knots indicated airspeed (KIAS), which is shown slightly higher than the airspeed for minimum R/D for all gross weights. The R/D variation with gross weights shown below 80 KIAS is for informational purposes only. Autorotation below 80 knots is not recommended because the deceleration does not effectively arrest the rate of descent. Adjusting the cyclic and collective control to maintain 100% NR and 100 KIAS will result in achieving the maximum glide distance This is shown on the GLIDE RATIO scale in Figure 9-3 which presents the distance traveled in Nautical Miles per 1000 feet of altitude loss for zero wind conditions, A landing area must be selected immediately after both engines fail. Throughout the descent, adjust collective as necessary to maintain NR within normal range. Figure 5-1 shows the rotor (NR) limitations. NR should be maintained at or slightly above 100 percent to allow ample rotor rpm before touchdown. Main rotor rpm will increase momentarily when the cyclic is moved aft with no change in collective pitch setting. An autorotative rpm of approximately 100 percent NR provides a reasonable rate of descent. NR above 100 percent will result in a higher rate of descent. At 50 to 75 feet AGL, use aft cyclic to decelerate. This reduces airspeed and rate of descent and causes an increase in NR. The degree of increase depends upon the amount and rate of deceleration. An increase in NR can be desirable in that more inertial energy in the rotor system will be available to cushion the landing. Ground contact should be made with some forward speed. Pitch attitudes up to 25 degrees at the point of touchdown normally result in an adequate deceleration and safe landing. If a rough area is selected, a steeper deceleration and a touchdown speed as close to zero as possible should be used. With deceleration beyond 25 degrees, there is the possibility of ground contact with the stabilator trailing edge. It is possible that during the autorotative approach, the situation may require additional deceleration. In that case, it is necessary to assume a landing attitude at a higher altitude than normal. Should both engines fail at low airspeed, initial collective reduction may vary widely. The objective is to reduce collective as necessary to maintain NR within normal range. In some instances at low altitude or low airspeed, settling may be so rapid that little can be done to avoid a hard-impact landing. In that case, it is criti-

HEIGHT VELOCITY AVOID REGIONS
SINGLE ENGINE FAILURE

EXAMPLE

WANTED

A TAKEOFF PROFILE WHICH WILL PERMIT A SAFE LANDING AFTER AN ENGINE SUDDENLY BECOMES INOPERATIVE.

KNOWN

AIRCRAFT GROSS WEIGHT = 22,000 LBS
AMBIENT CONDITIONS:
TEMPERATURE = 15°C
PRESSURE ALTITUDE = SEA LEVEL
WIND = 0 KTS

METHOD

TRACE ALONG GROSS WEIGHT LINE NOTING WHEEL HEIGHT / AIRSPEED COMBINATIONS WHICH WILL KEEP THE TAKEOFF PROFILE BELOW AND TO THE RIGHT OF THE AVOID REGION.

POINT	AIRSPEED	WHEEL HEIGHT
A	10	21
B	20	33
C	30	150

NOTE

BASED ON AN ETF OF .90 OF MAXIMUM RATED POWER.

DATA BASIS: ESTIMATED

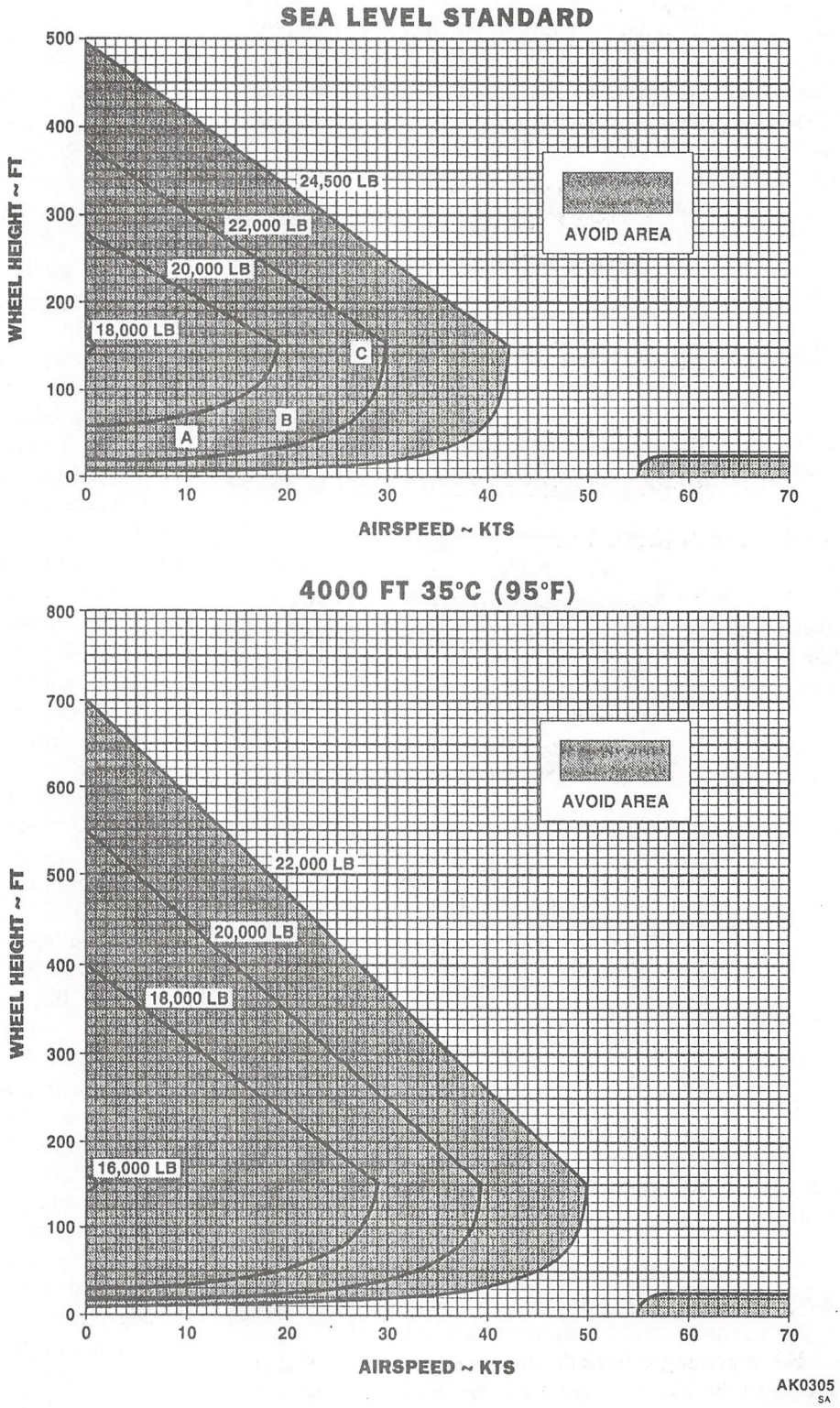

Figure 9-2. Height Velocity Diagram

cal to maintain a level landing attitude. Cushion the landing with remaining collective as helicopter settles to the ground. At slow airspeeds, where altitude permits, apply forward cyclic as necessary to increase airspeed to about 80 KIAS. Jettison external cargo as soon as possible to reduce weight and drag, improve autorotational performance, and reduce the chance of damage to the helicopter on landing.

9-13. DUAL ENGINE FAILURE LOW ALTITUDE/ LOW AIRSPEED AND CRUISE.

WARNING

Do not respond to engine out audio, VWS message, and warning lights until after checking ENG TEMP and NR indicators.

1. AUTOROTATE.
2. Jettison external tanks (as necessary).

9-14. DECREASING NR.

If an engine control unit fails to the low side and the other engine is unable to provide sufficient torque, NR will decrease.

CAUTION

When engine is controlled with ENG POWER CONT lever at the LOCKOUT position, engine response is much faster and the ENG TEMP limiting system is inoperative. Care must be taken not to exceed ENG TEMP limits while keeping NR, NP 1, and NP 2 within their normal operating range.

1. Collective - Adjust to control NR.
2. ENG POWER CONT lever - LOCKOUT, maintain TQ on low power/temperature engine approximately 10% below other engine.
3. Land as soon as practicable.

9-15. INCREASING NR.

NR increasing will result from an engine control system failing to the high side. NP 1 and NP 2 will increase with NR.

1. Collective - Adjust to control NR.
2. ENG POWER CONT lever - Retard, maintain TQ on high power/temperature engine approximately 10% below other engine.
3. Land as soon as practicable.

If the affected engine does not respond to ENG POWER CONT lever movement in the range between FLY and IDLE, the HMU may be malfunctioning. If this occurs:

4. Establish single engine airspeed.
5. Perform EMER ENG SHUTDOWN on affected engine.
6. Land as soon as practicable.

9-16. NP/NR INCREASING/DECREASING (OSCILLATION).

It is possible for a malfunction to occur that can cause the affected engine to oscillate. The other engine will respond to the change in power by also oscillating, usually with smaller amplitudes. The suggested pilot corrective action is to pull back the ENG POWER CONT lever of the suspected engine until oscillation stops. If the oscillation continues, the ENG POWER CONT lever should be returned to FLY position and the other ENG POWER CONT lever pulled back until the oscillation ceases. Once the malfunctioning engine has been identified, it should be placed in LOCKOUT and controlled manually.

1. Slowly retard the ENG POWER CONT lever on the suspected engine.

If the oscillation stops:

2. Place that engine in LOCKOUT and manually control the power.
3. Land as soon as practicable.

If the oscillation continues:

4. Place the ENG POWER CONT lever back to FLY and retard the ENG POWER CONT lever of the other engine.

When the oscillation stops:

5. Place the engine in LOCKOUT, manually control the power.

AUTOROTATION

5000 FT/STANDARD TEMPERATURE
CLEAN CONFIGURATION 100% NR

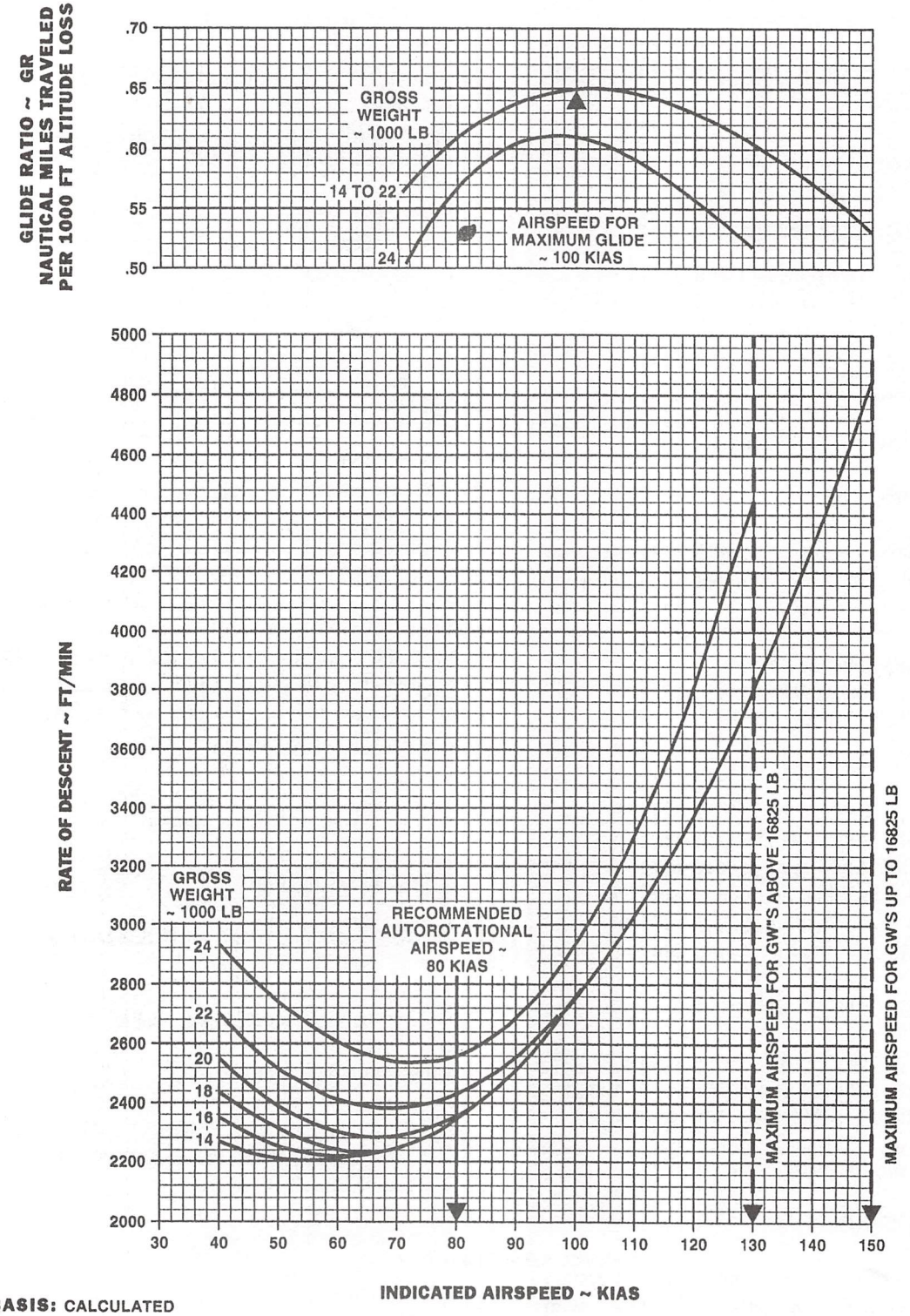

DATA BASIS: CALCULATED

AK0306_1
SA

Figure 9-3. Autorotative Glide Distance Chart (Sheet 1 of 2)

AUTOROTATION

5000 FT/STANDARD TEMPERATURE
ETS INSTALLED
100% NR

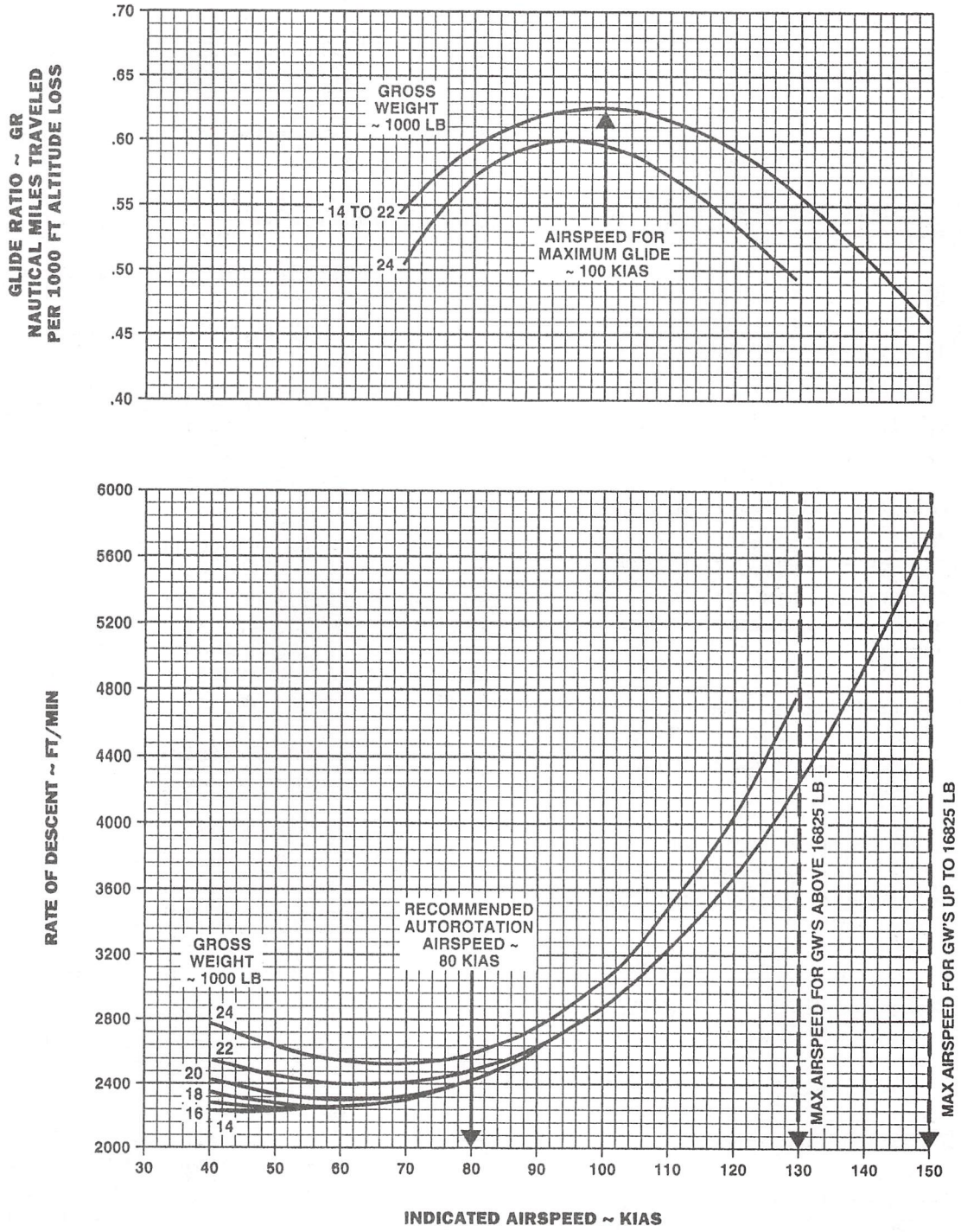

DATA BASIS: CALCULATED

AK0306_2
SA

Figure 9-3. Autorotative Glide Distance Chart (Sheet 2 of 2)

6. Land as soon as practicable.

9-17. #1 NG OR #2 NG SPEED HI CAUTION MESSAGE ON.

1. Collective - Adjust.

If caution message remains on:

2. ENG POWER CONT lever (affected engine) - Retard as necessary.

3. Land as soon as practicable.

9-18. TQ SPLIT BETWEEN ENGINES 1 AND 2 (ADVISORY MESSAGE - TORQUE SPLIT).

It is possible for a malfunction to occur that can cause a TQ split between engines without a significant change in NR. The TQ split can be corrected by manual control of the ENG POWER CONT lever on the affected engines.

1. If ENG TEMP of one engine exceeds the limiter (866 -4/+14°C with low power engine above 50% TQ or 891 -5/+15°C with low power engine below 50% TQ) retard ENG POWER CONT lever on that engine to reduce ENG TEMP. Adjust the ENG POWER CONT lever to maintain torque of the manually controlled engine at approximately 10% below the other engine.

2. If ENG TEMP limit on either engine is not exceeded, slowly retard ENG POWER CONT lever on high TQ engine and observe TQ of low power engine.

3. If TQ of low power engine increases, ENG POWER CONT lever on high power engine - Adjust to maintain TQ approximately 10% below other engine.

4. If TQ of low power engine does not increase, or NR decreases, ENG POWER CONT lever - Return high power engine to FLY.

5. Land as soon as practicable.

9-19. ENGINE COMPRESSOR STALL.

An engine compressor stall is normally recognized by a noticeable bang or popping noise and possible aircraft yaw. These responses are normally accompanied by the rapid increase in ENG TEMP and fluctuations in NG, TQ, and NP reading for the affected engine. In the event of a compressor stall:

1. Collective - Reduce.

If condition persists:

2. ENG POWER CONT lever (affected engine) - Retard (ENG TEMP should decrease).

3. ENG POWER CONT lever (affected engine) - FLY.

If stall condition recurs:

4. EMER ENG SHUTDOWN (affected engine).

5. Refer to single engine failure emergency procedure.

9-20. ENG 1 OR ENG 2 OIL BYPASS CAUTION MESSAGE ON.

1. ENG POWER CONT lever - Retard.

2. Land as soon as practicable.

9-21. ENG 1 OR ENG 2 CHIPS, ENG 1 OR ENG 2 OIL PRESS HI/LO, ENG 1 OR ENG 2 OIL HOT, OR ENG TEMP HI CAUTION MESSAGE ON; OR ENGINE OIL TEMPERATURE HIGH OR ENGINE OIL PRESSURE HIGH/LOW.

1. ENG POWER CONT lever - Retard to reduce torque on affected engine.

If oil pressure is below minimum limits or if oil temperature remains above maximum limits:

2. EMER ENG SHUTDOWN (affected engine).

3. Refer to single engine failure emergency procedure.

9-22. ENGINE HIGH-SPEED SHAFT FAILURE.

A high speed shaft can have a complete or partial failure. A partial failure may be characterized at first by nothing more than a loud high-speed rattle and vibration coming from the engine area. A complete failure will be accompanied by a loud bang that will result in a sudden TQ decrease to zero on the affected engine. The DRV SHAFT

#1 FAIL or DRV SHAFT #2 FAIL caution message will illuminate as appropriate when the NP of the affected engine is greater than NR by 3% for 0.5 seconds or longer and engine torque is less than 10%. Percent NP of affected engine will increase until overspeed system is activated.

1. Collective - Adjust as necessary.
2. Verify failure with other instruments on engine instrument pages.
3. EMER ENG SHUTDOWN (affected engine). Do not attempt to restart.
4. Refer to single engine failure emergency procedure.

9-23. LIGHTNING STRIKE.

WARNING

Lightning strikes may result in loss of automatic flight control functions, engine controls, and/or electric power.

Lightning strike may cause one or both engines to immediately produce maximum power with no ENG TEMP limiting or overspeed protection. Systems instruments may also be inoperative. If this occurs, the flight crew would have to adjust the malfunctioning engine(s) power control lever(s) as required to control rpm by sound and feel. If practical, the pilot should reduce speed to 80 KIAS, this will reduce the criticality of having the correct rotor speed of 100%.

1. ENG POWER CONT levers - Adjust as required to control rpm.
2. Land as soon as possible.

9-24. ROTORS, TRANSMISSIONS, AND DRIVE SYSTEMS.

9-25. LOSS OF TAIL ROTOR THRUST.

Failure of the tail rotor gearbox, intermediate gearbox, or tail rotor drive shaft will result in a loss of tail rotor thrust. The nose of the helicopter will yaw right regardless of the airspeed at which the failure occurs. Continued level flight may not be possible following this type failure. Loss of tail rotor thrust at low speed will result in rapid right yaw. At higher airspeed, right yaw may develop more slowly but will continue to increase. Autorotation should be entered promptly and engine control levers retarded to OFF position. Every effort should be made to establish and maintain an autorotative glide at or above minimum rate of descent airspeed. This will maximize the effectiveness of the deceleration during the landing sequence. If autorotation entry is delayed, large sideslip angles can develop causing low indicated airspeed with the stabilator programming down. This can make it more difficult to establish or maintain adequate autorotative airspeed.

1. AUTOROTATE.
2. ENG POWER CONT levers - OFF.

9-26. LOSS OF TAIL ROTOR THRUST AT LOW AIRSPEED/HOVER.

Loss of tail rotor thrust at slow airspeeds may result in extreme yaw angles and uncontrolled rotation to the right. Immediate collective pitch reduction should be initiated to reduce the yaw and begin a controlled rate of descent. If the helicopter is high enough above the ground, initiate a power-on descent. Collective should be adjusted so that an acceptable compromise between rate of turn and rate of descent is maintained. At approximately 5 to 10 feet above touchdown, initiate a hovering autorotation by placing ENG POWER CONT levers at OFF.

1. Collective - Reduce.
2. ENG POWER CONT levers - OFF (5 to 10 feet above touchdown).

9-27. ROTOR BRAKE ON CAUTION MESSAGE ON - IN FLIGHT.

1. Check rotor brake in detent, pressure gage at zero.
2. Check for evidence of puck dragging.

If secondary indications are present:

3. Land as soon as possible.

If no secondary indications are present:

4. Land as soon as practicable.

9-28. TR QDRNT FAIL CAUTION MESSAGE ON WITH NO LOSS OF TAIL ROTOR CONTROL.

Loss of one tail rotor cable will be indicated by illumination of TR QDRNT FAIL caution message. No change in handling characteristics should occur.

Land as soon as practicable.

9-29. TR QDRNT FAIL CAUTION MESSAGE ON WITH LOSS OF TAIL ROTOR CONTROL.

If both tail rotor control cables fail, a centering spring will position the tail rotor servo linkage to provide 10.5° of pitch. This will allow trimmed flight at about 25 KIAS and 145 KIAS (these speeds will vary with gross weight). At airspeeds below 25 KIAS and above 145 KIAS, right yaw can be controlled by reducing collective. Between 25 and 145 KIAS, left yaw can be controlled by increasing collective. A shallow approach to a roll-on landing technique is recommended. During the approach, a yaw to the left will occur. As the touchdown point is approached, a mild deceleration should be executed to reduce airspeed. As collective is increased to cushion touchdown, the nose of the helicopter will yaw right, careful adjustment of collective and deceleration should allow a tail-low touchdown with approximately runway alignment. Upon touchdown, lower collective carefully. Use brakes to control heading.

1. Collective - Adjust.
2. Land as soon as practicable.

9-30. PEDAL BIND/RESTRICTION OR DRIVE WITH NO ACCOMPANYING CAUTION MESSAGE.

When pedal bind/restriction or motoring is noted with no caution messages illuminated, the cause of the restriction may not be apparent. Normally, any trim or yaw SAS malfunction can be overridden by pilot inputs. In case of a pedal bind/restriction with no associated mode failure capsules:

1. Apply pedal force to oppose the drive.
2. AUTO PLT switch - Press off (AUTO PLT light off).

If normal control forces are not restored:

3. SAS/BOOST switch - Press off (SAS/BST light off).

If control forces, normal for SAS/BOOST off flight are not restored:

4. SAS/BOOST switch - Press on (SAS/BST light illuminated).
5. TAIL SERVO switch - BACKUP, if tail rotor is not restored.

a. If the tail rotor quadrant becomes jammed, collective control is available, except that low collective with right pedal or high collective with a left pedal will be restricted. With a quadrant jam, complete collective travel is available for most control combinations, provided the pedals are allowed to move as the collective is displaced.

b. If tail rotor pitch becomes fixed during decreased power situations (right pedal applied), the nose of the helicopter will turn to the right when power is applied, possibly even greater than complete loss of tail rotor thrust. Some conditions may require entry into autorotation to control yaw rate. If continued flight is possible, a shallow approach at about 80 KIAS to a roll-on landing should be made. As the touchdown point is approached, a mild deceleration should be executed about 15 - 25 feet to reduce airspeed to about 40 KIAS. As collective is increased to cushion touchdown, the nose of the helicopter will turn to the right. Careful adjustment of collective and deceleration should allow a tail-low touchdown with approximate runway alignment. Upon touchdown, lower collective carefully and use brakes to control heading.

c. If tail rotor pitch becomes fixed during increased power situations (left pedal applied), the nose of the helicopter will turn left when collective is decreased. Under these conditions, powered flight to a prepared landing site and a powered landing is possible since the sideslip angle will probably be corrected when power is applied for touchdown. Adjust approach speed and rate of descent to maintain a sideslip angle of less than 20 degrees. Sideslip angle may be reduced by either increasing airspeed or collective. Execute a decelerated touchdown tailwheel first, and cushion landing with collective. Upon touchdown, lower collective carefully and use brakes to control heading.

6. Land as soon as practicable.

9-31. TR #1 SERVO/BKUP FAIL CAUTION MESSAGE ON.

Automatic switchover did not take place.

1. Airspeed - Adjust.
2. TAIL SERVO switch - BACKUP.

3. BACKUP HYD PUMP switch - ON.

4. Land as soon as practicable.

9-32. MN XMSN PRESS LO/MN XMSN PRESS HI/MN XMSN OIL HOT CAUTION MESSAGE ON; OR MAIN TRANSMISSION OIL PRESSURE LOW/ HIGH OR MAIN TRANSMISSION OIL TEMPERATURE HIGH.

Loss of cooling oil supply will lead to electrical and/or mechanical failure of main generators. If the malfunction is such that oil pressure decays slowly, the generators may fail before MN XMSN PRESS LO caution message goes on.

1. Land as soon as possible.

If time permits:

2. EMER APU START.

3. GENERATORS NO.1 and NO.2 switches - OFF/RESET.

9-33. CHIP INPUT LH OR RH CAUTION MESSAGE ON.

1. ENG POWER CONT lever on affected engine - IDLE.

2. Land as soon as possible.

9-34. MAIN XMSN CHIP, LH OR RH AGB CHIP, TAIL XMSN CHIP/TEMP, OR INTMD XMSN CHIP/ TEMP CAUTION MESSAGE ON.

Land as soon as possible.

9-35. FIRE.

CAUTION

If ac power is not available, only the reserve fire bottle can be discharged and fire extinguishing capability for the No.2 engine will be lost.

The safety of aircraft occupants is the primary consideration when a fire occurs; therefore, it is imperative that every effort be made to extinguish the fire. On the ground, it is essential that the engine be shut down, crew and passengers evacuated, and fire fighting begun immediately. If time permits, a "May Day" radio call should be made while electrical power is available to expedite assistance from fire-fighting equipment and personnel. If the helicopter is airborne when a fire occurs, the most important single action that can be taken by the pilot is to land. Consideration must be given to jettisoning external fuel tanks, placing the FUEL BOOST PUMP CONTROL panel No.1 PUMP and No.2 PUMP switches to OFF, and placing the FUEL MGT panel INT AUX and MODE SEL switches to OFF, PROBE, and MANUAL respectively prior to landing.

9-36. ENGINE/FUSELAGE FIRE ON GROUND.

1. ENG POWER CONT levers - OFF.

2. ENG EMER OFF handle - Pull if applicable.

3. FIRE EXTGH switch - MAIN/RESERVE, as required.

9-37. APU COMPARTMENT FIRE.

1. APU fire T-handle - Pull.

2. FIRE EXTGH switch - MAIN/RESERVE as required.

9-38. APU OIL HOT CAUTION MESSAGE ON.

APU CONTR switch - OFF. Do not attempt restart until oil level has been checked.

9-39. ENGINE FIRE IN FLIGHT.

WARNING

Attempt to visually confirm fire before engine shutdown or discharging extinguishing agent.

1. ENG POWER CONT lever (affected engine) - OFF.

2. ENG EMER OFF handle - Pull.

3. FIRE EXTGH switch - MAIN/RESERVE as required.

4. Land as soon as possible.

9-40. ELECTRICAL FIRE IN FLIGHT.

Prior to shutting off all electrical power, the pilot must consider the equipment that is essential to a particular flight environment which will be affected, e.g., MFDs, backup flight instruments, flight controls, etc. If a landing cannot be made as soon as possible the affected circuit may be isolated by selectively turning off electrical equipment and/or pulling circuit breakers.

1. BATT and GENERATORS switches - OFF.
2. Land as soon as possible.

9-41. SMOKE AND FUME ELIMINATION.

WARNING

If battery overheats, do not remove battery cover or attempt to disconnect or remove battery. Battery fluid will cause burns, and an overheated battery could cause thermal burns and may explode.

Smoke or fumes in the cockpit/cabin can be eliminated as follows:

1. Airspeed - 80 KIAS or less.
2. Cabin doors and gunner's windows - Open.
3. Place helicopter out of trim.

9-42. FUEL SYSTEM MALFUNCTIONS.

9-43. EXTERNAL TANK SYSTEM WILL NOT TRANSFER IN AUTOMATIC MODE.

1. Verify NO.1 and NO.2 FUEL XFER PUMP circuit breakers - In.
2. MODE SEL switches - XFER and AUTO.
3. PUMP switch - NO.1 or NO.2 (if system fails to transfer fuel, select other pump).
4. Cycle MODE SEL switch from AUTO to MANUAL, then back to AUTO (resets transfer trigger logic).

If system still did not transfer in the automatic mode:

5. MODE SEL switches - XFER and MANUAL.
6. MAN EXT TANK switch - FLOW.
7. PUMP switch - NO.1 or NO.2 (if system fails to transfer fuel, select other pump).
8. Fuel transfer - Maintain within CG limits.

9-44. EXTERNAL TANK SYSTEM WILL NOT TRANSFER IN MANUAL MODE.

1. Verify NO.1 and NO.2 FUEL XFER PUMP circuit breakers - In.
2. MODE SEL switches - XFER and MANUAL.
3. MAN EXT TANK switch - FLOW.
4. PUMP switch - NO.1 or NO.2 (if system fails to transfer fuel, select other pump).

If system fails to transfer in manual mode:

5. MODE SEL switches - XFER and AUTO.
6. PUMP switch - NO.1 or NO.2 (if system fails to transfer fuel, select other pump).

9-45. INTERNAL AUXILIARY TANK SYSTEM WILL NOT TRANSFER IN MANUAL MODE.

1. Verify NO.1 and NO.2 FUEL XFER PUMP circuit breakers - In.
2. MODE SEL switches - XFER and MANUAL.
3. INT AUX switch - XFER.
4. PUMP switch - NO.1 or NO.2 (if system fails to transfer fuel, select other pump).

If system fails to transfer in manual mode:

5. Check position of unisex valves.

9-46. EXTERNAL TANK SYSTEM JETTISON.

CAUTION

Jettisoning of external tanks during level flight at an airspeed greater than 120 KIAS, during a descent (less than 500 feet per minute) at an airspeed greater than 70 KIAS, or during a descent greater than 500 feet per minute (e.g., in an autorotation) may cause damage to the aircraft/rotor system due to external tanks impact and should be avoided.

The external fuel tanks may be jettisoned at the discretion of the pilot. The tanks can only be jettisoned electrically by pushing the EXT TANK JETT switch(es) on the FUEL MGT panel up (on position). Tanks are jettisoned simultaneously.

Either EXT TANK JETT switch - On, if both tanks fail to jettison, select other switch.

9-47. FAILURE OF PROBE TO EXTEND.

1. MODE SEL switches - AUTO and PROBE.
2. RFL PROBE, AUX FUEL INT, AUX FUEL EXT, and No.1 and No.2 XFER PUMP circuit breakers - In.
3. PROBE control switch - EXTEND.
4. PUMP switch - NO.1 or NO.2 (if probe fails to extend, select other pump).

9-48. FAILURE OF PROBE TO RETRACT.

1. MODE SEL switches - AUTO and PROBE.
2. RFL PROBE, AUX FUEL INT, AUX FUEL EXT, and No.1 and No.2 XFER PUMP circuit breakers - In.
3. PROBE control switch - RETRACT.
4. PUMP switch - NO.1 or NO.2 (if probe fails to retract, select other pump).

If probe fails to retract, the following precautions should be observed:

a. Avoid abrupt and excessive fore and aft applications of cyclic which could cause excessive blade flapping.

b. During landings, avoid high sink rates which could cause excessive blade flapping or probe contact with the ground.

c. During takeoffs, avoid excessive nose down attitudes which could cause the probe tip to strike the ground.

9-49. ENG 1 OR ENG 2 FUEL BYPASS CAUTION MESSAGE ON.

1. ENG FUEL SYS selector on affected engine - XFD.
2. Land as soon as practicable.

9-50. ENG 1 AND ENG 2 FUEL BYPASS CAUTION MESSAGES ON.

Land as soon as possible.

9-51. #1 OR #2 FUEL TANK LO CAUTION MESSAGE ON.

Land as soon as practicable.

9-52. ENG 1 OR ENG 2 FUEL PRESS LO CAUTION MESSAGES ON.

If the message displays, flameout is possible. Do not make rapid collective movements. This emergency procedure has been written to include corrective action for critical situations. Critical situations are those where the loss of an engine represents a greater hazard than the possibility of pressurizing a fuel leak.

If the message displays and the situation is critical:

1. FUEL BOOST PUMP CONTROL switch(es) - ON.

This portion of the emergency procedure has been written to provide the best method of isolating the cause of the failure and prescribing the proper corrective action when the situation is not critical.

If the situation is not critical:

2. ENG FUEL SYS selector on affected engine - XFD.

If message stays on:

3. FUEL BOOST PUMP CONTROL switches NO.1 and NO.2 - ON.

If message stays on:

4. FUEL BOOST PUMP CONTROL switches NO.1 and NO.2 - OFF.

5. Land as soon as practicable.

9-53. ELECTRICAL SYSTEM.

9-54. NO.1 AND NO.2 GENERATORS FAIL (ALL MFDs WILL BLANK).

1. Airspeed - Adjust.

2. GENERATORS NO.1 and NO.2 switches - OFF/RESET, then ON.

If MFDs remain blank:

3. GENERATORS NO.1 and NO.2 switches - OFF/RESET.

4. EMER APU START.

5. Land as soon as practicable.

9-55. #1 OR #2 GEN FAIL CAUTION MESSAGE ON.

1. Affected generator switch - OFF/RESET, then ON.

If caution message remains on:

2. Affected generator switch - OFF/RESET.

3. EMER APU START.

9-56. #1 AND #2 CONV FAIL CAUTION MESSAGES ON.

NOTE

When only battery power is available, battery life is about 22 minutes (day) and 14 minutes (night) for a battery 80% charged.

1. Unnecessary DC electrical equipment - Off.

2. Land as soon as practicable.

9-57. #1 OR #2 CONV FAIL CAUTION MESSAGE ON.

CONV FAIL switch - As desired.

9-58. BATTERY FAIL CAUTION MESSAGE ON.

1. BATT switch - OFF, then ON.

If BATTERY FAIL Caution message goes on, cycle BATT switch no more than two times.

If message remains on:

2. BATT switch - OFF.

9-59. BATT LO CHARGE CAUTION MESSAGE ON.

BATT LO CHARGE caution message on indicates charge is at or below 40% .

If light goes on after ground APU start:

1. BATT switch - OFF, then ON to reset charger analyzer logic. About 30 minutes may be required to recharge battery.

If message goes on in flight:

2. BATT switch - OFF, to conserve remaining battery charge.

9-60. HYDRAULIC SYSTEM.

9-61. HYD FAIL WARNING MESSAGE ON.

1. Establish landing attitude.

2. Minimize control inputs.

3. Begin a descent.

4. Land as soon as possible.

9-62. #1 HYD PUMP FAIL CAUTION MESSAGE ON.

1. TAIL SERVO switch - BACKUP, then NORMAL.

2. Land as soon as practicable.

9-63. #2 HYD PUMP FAIL CAUTION MESSAGE ON.

1. AFCS CONTROL panel any FAIL ADVISORY MODE RESET switch - Press, then release.

2. Land as soon as practicable.

9-64. #1 & #2 HYD PUMP FAIL CAUTION MESSAGE ON.

Land as soon as possible. Restrict control movement to moderate rates.

9-65. #1 OR #2 HYD PUMP FAIL CAUTION MESSAGE ON AND BKUP HYD PUMP ON ADVISORY MESSAGE OFF.

a. Loss of both the No.1 hydraulic pump and backup pump results in both stages of the tail rotor servo being unpressurized. The yaw boost servo is still pressurized and allows limited tail rotor control. The initial aircraft reaction to loss of both stages of the tail rotor servo is exactly the same as for loss of tail rotor control. The collective need not be used to control the yawing tendency below 25 KIAS or above 145 KIAS, since the mechanical control system is still intact. Maximum pilot effort on the pedals and the output of the yaw boost servo are insufficient to produce the tail rotor pitch required to hover; a roll-on landing technique is recommended.

b. Loss of both the No.2 hydraulic pump and the backup pump results in the loss of pilot-assist servos. Boost should be turned off if the backup pump cannot be regained.

(1) Airspeed - Adjust to a comfortable airspeed.

(2) BACKUP HYD PUMP switch - ON.

(3) AUTO PLT and SAS/BOOST switches - Press off (switch lights off, for #2 HYD PUMP FAIL caution message).

(4) Land as soon as possible.

9-66. PRI SERVO #1 OR #2 PRESS LO CAUTION MESSAGE ON.

1. SERVO switches - Check centered.

If caution message remains on:

2. Land as soon as possible.

9-67. #1 PUMP/RSVR LO/BUON CAUTION MESSAGE ON.

1. Land as soon as practicable.

If BKUP RSVR LO caution message also goes on:

2. SERVO switch - 1ST OFF.

3. Land as soon as possible.

If PRI SERVO #2 PRESS LO caution message goes on:

WARNING

Loss of both stages of the primary servo requires immediate pilot action.

4. Establish landing attitude, minimize control inputs, and begin a descent.

9-68. #2 PUMP/RSVR LO/BUON CAUTION MESSAGE ON.

1. AFCS CONTROL panel FAILURE ADVISORY MODE RESET switches - Press, then release.

2. Land as soon as practicable.

If BKUP RSVR LO caution message also goes on:

3. SERVO switch - 2ND OFF.

4. Land as soon as possible.

If PRI SERVO #1 PRESS LO caution message goes on:

WARNING

Loss of both stages of the primary servo requires immediate pilot action.

5. Establish landing attitude, minimize control inputs, and begin a descent.

9-69. HYDR RSVR 2 LO CAUTION MESSAGE ON.

NOTE

Because logic module will close valves supplying pressure to pilot-assist servos, BOOST SERVO OFF, SAS FAIL, and AFCS DEGRADED CAUTION messages will be on.

Pilot-assist servos will be isolated; if they remain isolated, proceed as follows:

1. Airspeed - Adjust.
2. SAS 1, SAS 2, AUTO PLT, and SAS/BOOST switches - Press off (switch lights off).
3. Land as soon as practicable.

9-70. COLLECTIVE BOOST SERVO HARDOVER/ POWER PISTON FAILURE.

Hardover failure of the collective boost servo will increase control forces. The increased control forces can be immediately eliminated by shutting off the boost servo. Resulting control loads will then be the same as for in-flight boost servo off.

1. SAS/BOOST switch - Press off.
2. Airspeed - Adjust.
3. Land as soon as practicable.

9-71. PITCH BOOST SERVO HARDOVER.

Hardover failure of the pitch boost servo will increase the longitudinal cyclic control forces (approximately 20 pounds). The increased control forces can be immediately eliminated by shutting off SAS/BOOST.

1. SAS 1, SAS 2, and AUTO PLT switches - off.
2. Airspeed - Adjust.
3. Land as soon as practicable.

9-72. BOOST SERVO OFF CAUTION MESSAGE ON.

Display of the BOOST SERVO OFF caution message with no other caution messages on indicates a pilot valve jam in either the collective or yaw boost servo. Control forces in the affected axis will be similar to flight with boost off.

1. Airspeed - Adjust.
2. SAS/BOOST switch - Press off.
3. Land as soon as practicable.

9-73. LANDING AND DITCHING.

9-74. EMERGENCY LANDING IN WOODED AREAS - POWER OFF.

1. AUTOROTATE. Decelerate helicopter to stop all forward speed at treetop level.
2. Collective adjust to maximum before main rotor contacts tree branches.

9-75. DITCHING POWER ON.

The decision to ditch the helicopter shall be made by the pilot when an emergency makes further flight unsafe.

1. Approach to a hover.
2. Cockpit doors jettison and cabin doors open.
3. Pilot shoulder harness - Lock.
4. Survival gear - Deploy.
5. Personnel, except pilot, exit helicopter.
6. Fly helicopter downwind a safe distance and hover.
7. ENG POWER CONT levers - OFF.
8. Perform hovering autorotation, apply full collective to decay rotor rpm as helicopter settles.
9. Position cyclic in direction of roll.

10. Exit when main rotor has stopped.

9-76. DITCHING POWER OFF.

If ditching is imminent, accomplish engine malfunction emergency procedures. During descent, open cockpit and cabin doors. Decelerate to zero forward speed as the helicopter nears the water. Apply all of the collective as the helicopter nears the water. Maintain a level attitude as the helicopter sinks and until it begins to roll; then apply cyclic in the direction of the roll. Exit after main rotor has stopped.

1. AUTOROTATE.
2. Cockpit and cabin doors - Open.
3. Apply full collective to decay rotor rpm as helicopter settles.
4. Cyclic - Position in direction of roll.
5. Exit after main rotor has stopped.

9-77. FLIGHT CONTROL/MAIN ROTOR SYSTEM MALFUNCTIONS.

a. Failure of components within the flight control system may be indicated through varying degrees of feedback, binding, resistance, or sloppiness. These conditions should not be mistaken for malfunction of the AFCS.

b. Imminent failure of main rotor components may be indicated by a sudden increase in main rotor vibration and/or unusual noise. Severe changes in lift characteristics and/or balance condition can occur due to blade strikes, skin separation, shift or loss of balance weights or other material. Malfunctions may result in severe main-rotor flapping. If the main-rotor system malfunctions:

WARNING

Danger exists that the main rotor system could collapse or separate from the aircraft after landing. Exit after main rotor has stopped.

(1) Land as soon as possible.

(2) EMER ENG(S) SHUTDOWN after landing.

9-78. AFCS MALFUNCTIONS.

9-79. AFCS DEGRADED CAUTION MESSAGE ON.

a. AFCS DEGRADED caution message indicates failure of one or more modes of AFCS computer operation. If the CMPTR PWR/RESET light is off, then primary power to the DAFCS computer has been lost.

(1) AFCS CMPTR circuit breaker check - In.

(2) CMPTR PWR/RESET switch - Press.

If operation is not restored:

(3) Land as soon as practicable.

(4) AFCS FAIL ADVISORY MODE RESET switches - Press, then release (any of the three switches).

If operation is not restored:

(5) CMPTR PWR/RESET - Press off, then press on.

If operation is still not restored:

(6) Malfunctioning system - Off if possible.

b. AFCS DEGRADED message accompanied by certain FAIL ADVISORY lights on the AFCS CONTROL panel may be indicative of sensor failures which could slightly degrade stabilator system performance, but not sufficiently enough to cause an actuator miscompare, reversion to manual mode, a STABILATOR FAIL message, or AUTO CONTROL light on the STABILATOR control panel to extinguish. The stabilator system related sensors and associated FAIL ADVISORY lights are as follows:

SENSOR	FAIL ADVISORY LIGHT
Lateral Accelerometers	CORD, AUG, and CPLR (if engaged)
Collective Stick Position Transducer	HDG
Airspeed and Air Data Transducer	SAS 1, AUG, BIAS, A/S, CORD, and CPLR (if engaged)
Pitch Rate Gyro No.1 only	SAS 1 and SAS 2

SENSOR	FAIL ADVISORY LIGHT
Pitch Rate Gyro No.2 only	SAS 2
Pitch Rate Gyro Dual or Unresolved Failure	SAS 1, SAS 2, AUG, BIAS, A/S, ATT, and CPLR (if engaged)

9-80. BIAS FAIL ADVISORY LIGHT ON.

If the BIAS FAIL ADVISORY light on the AFCS CONTROL panel illuminates singly in conjunction with an AFCS DEGRADED caution message, the pitch bias actuator is not responding to AFCS computer commands. The pitch bias actuator stops at this point and does not bias. This results in a loss of up to 1.5 inches of forward or aft cyclic control authority.

1. AFCS FAIL ADVISORY MODE RESET switches - Depress, then release (any one of the three switches).

If normal operation is not restored:

2. Land as soon as practicable.

9-81. AFCS FAIL ADVISORY LIGHT(S) ON.

Table 9-1 describes the AFCS FAIL ADVISORY light hierarchy. Pilot action is dependent on associated lights and system performance. A complete discussion is found in Chapter 2.

9-82. SAS FAIL CAUTION MESSAGE ON.

Indicates loss of pressure to the SAS actuator(s), loss of damping, or hardover. Coupler functions will be inoperative, and AFCS DEGRADED caution message will illuminate.

1. SAS 1 and SAS 2 switches - Press off.

2. Airspeed - Adjust.

9-83. SAS FAILURE WITH NO FAIL ADVISORY LIGHT OR CAUTION MESSAGE.

Erratic electrical input to a SAS actuator can result in moderate rotor tip path oscillations. No SAS malfunction, however, can physically drive the pilots' flight controls. Failures of either SAS 1 or SAS 2 are usually but not necessary followed by a FAIL ADVISORY light or caution message.

If the helicopter experiences erratic motion of the rotor tip path without a FAIL ADVISORY light or caution message:

1. SAS 1 switch - Press off.

If condition persists:

2. SAS 1 switch - Press on.

3. SAS 2 switch - Press off.

If malfunction still persists:

4. SAS 1 switch - Press off (AUTO PLT will automatically disengage).

5. Airspeed - Adjust as required.

9-84. COUPLER EMERGENCIES.

9-85. EMERGENCIES AND/OR EQUIPMENT MALFUNCTIONS - GENERAL.

WARNING

If an AFCS DEGRADED message and a flashing AFCS FAIL ADVISORY ALT light are experienced during an approach or depart, the automatic approach or depart mode will be discontinued and barometric altitude hold will engage. If the same conditions occur in a hover, the hover mode will remain engaged and altitude hold will switch to BAR ALT. In either case, altitude hold will not be as precise because the barometric sensor is less sensitive than the radar altimeter. Therefore, if the aircraft is operating close to the surface when a RDR ALT failure occurs, pilot action is required to prevent possible surface impact.

During a coupled approach/hover emergencies and/or malfunctions must be disposed of quickly and correctly. An AFCS DEGRADED message must be investigated thoroughly prior to completing an approach. An AFCS DEGRADED message with a flashing AFCS FAIL ADVISORY CPLR and CH light is normal during an approach with little or no Doppler return.

9-86. AFCS DEGRADED MESSAGE WITH AFCS FAIL ADVISORY ALT LIGHT ON - DURING APPROACH/HOVER.

1. Control aircraft manually.
2. Use barometric altimeter for approach/hover.

9-87. COLLECTIVE, PITCH, ROLL, OR YAW TRIM HARDOVER.

1. AFCS CONTROL panel any FAIL ADVISORY MODE RESET switch - Press and release.
2. If the failure recurs, control affected axis manually.

9-88. TRIM ACTUATOR JAMMED.

Both yaw and collective trim actuators incorporate slip clutches to allow pilot and copilot inputs if either actuator should jam. The forces required to override the clutches are 80 pounds maximum in yaw and 40 pounds maximum in collective:

Land as soon as practicable.

9-89. STABILATOR MALFUNCTION - AUTO MODE FAILURE.

An auto mode failure will normally result in the stabilator failing in place. The position of failure may vary from the ideal programmed position by 10° at 30 KIAS to 4° at 150 KIAS. If an approach is made with the stabilator fixed at 0°, the pitch attitude may be 4° to 5° higher than normal in the 20 to 40 KIAS range.

WARNING

If acceleration is continued or collective is decreased with the stabilator in a trailing edge down position, longitudinal control will be lost. The stabilator shall be slewed to 0° above 40 KIAS and full down when airspeed is less than 40 KIAS.

Pressing the auto control reset button after a failure will result in the automatic mode coming on for one second. If a hardover signal to one actuator is present, the stabilator could move approximately 4-5° in that one second before another auto mode failure occurs. Subsequent reset attempts could result in the stabilator moving to an unsafe position.

If the stabilator AUTO mode repeatedly disengages during a flight, flight above 70 KIAS is prohibited with the stabilator in the AUTO mode.

If an auto mode failure occurs:

NOTE

Use of the cyclic stabilator slew-up switch should be announced to the crew to minimize cockpit confusion.

1. Cyclic slew switch - Adjust if necessary to arrest nose down pitch rate.
2. AUTO CONTROL switch - Press ON once.

If an automatic control is not regained:

3. Manually slew stabilator - Adjust to 0° for flight above 40 KIAS or full down when airspeed is less than 40 KIAS. The preferred method of manually slewing the stabilator up is to use the cyclic slew-up switch.
4. Land as soon as practicable.

If manual control is not possible:

5. STAB POS indicator - Check and fly at or below KIAS LIMITS shown on placard.
6. Land as soon as practicable.

9-90. UNCOMMANDED NOSE DOWN/UP PITCH ATTITUDE CHANGE.

a. An uncommanded nose down/up pitch attitude change could be the result of a stabilator or other AFCS malfunction (SAS, autopilot, or PBA). There is a remote possibility that a stabilator malfunction could occur in the automatic or manual mode without audio warning or caution message illumination.

b. If an uncommanded nose down pitch attitude change is detected, the pilot should initially attempt to stop the rate with aft cyclic. Maintaining or increasing collective position may assist in correcting for a nose down pitch attitude. If the nose down pitch rate continues, and/or inappropriate stabilator movement is observed, activate the cyclic slew-up

switch to adjust the stabilator to control pitch attitude. Continue to monitor the stabilator position when the slew-up switch is released to insure movement stops.

c. Uncommanded nose up pitch attitude changes at airspeeds of 140 KIAS and less should not become severe even if caused by full up slew of the stabilator and can be corrected with forward cyclic. If the nose up pitch attitude is caused by full up stabilator slew at airspeeds above 140 KIAS, full forward cyclic may not arrest the nose up pitch rate.

d. If an uncommanded nose up pitch attitude change is detected, the pilot should initially attempt to stop the rate with forward cyclic. At airspeeds above 140 KIAS, a collective reduction of approximately 3 inches, simultaneously with forward cyclic will arrest the nose up pitch rate. If these control corrections are delayed and/or a large nose up attitude results, a moderate roll to the nearest horizon will assist in returning the aircraft to level flight. After the nose returns to the horizon, roll to a level attitude. After coordination with the pilot, the copilot should adjust the stabilator to 0 degree at airspeeds above 40 KIAS and full down at airspeeds below 40 KIAS.

If an uncommanded nose down pitch attitude occurs:

(1) Cyclic - Adjust as required.

(2) Collective - Maintain or increase.

(3) Cyclic slew-up switch - Adjust as required to arrest nose down pitch rate.

(4) MAN SLEW switch - Adjust to 0 degree at airspeeds above 40 KIAS and full down at airspeeds below 40 KIAS.

(5) Land as soon as practicable.

If an uncommanded nose up pitch attitude occurs:

(6) Cyclic - Adjust as required.

(7) Collective - Reduce as required.

(8) MAN SLEW switch - Adjust to 0 degree at airspeeds above 40 KIAS and full down at airspeeds below 40 KIAS.

(9) Land as soon as practicable.

Section II MISSION EQUIPMENT

9-91. BLADE DEICE SYSTEM MALFUNCTIONS.

9-92. MR DEICE FAULT, MR DEICE FAIL, OR TR DEICE FAIL CAUTION MESSAGE ON.

If the MR DEICE FAULT caution message goes on, the system will continue to function in a degraded mode. The pilot must be aware of increases in vibration levels and TQ requirements, which could be a result of ice buildup. If the MR DEICE FAIL caution message goes on, the main rotor deice will automatically turn off and tail rotor deice will remain on. If the TR DEICE FAIL caution light goes on, tail rotor deice will automatically turn off and main rotor deice will remain on.

1. Icing conditions - Exit.

When clear of icing conditions:

2. BLADE DEICE POWER switch - OFF.

If vibrations increase:

3. Land as soon as possible.

9-93. BLADE DE-ICE TEST PANEL PWR MAIN RTR AND/OR TAIL RTR MONITOR LIGHT(S) ON.

If a PWR monitor light is on with BLADE DEICE panel POWER switch ON:

1. Icing conditions - Exit.
2. BLADE DEICE panel POWER switch - OFF (to stop power from being applied to the blades).

If a PWR monitor light is still on with BLADE DEICE panel POWER switch OFF:

3. GENERATORS NO.1 or NO.2 switch - OFF.
4. APU generator switch - OFF (if in use).
5. Land as soon as practicable.

9-94. ICE RATE METER FAIL OR INACCURATE.

Failure of the ice rate meter should be indicated by appearance of the FAIL flag on the meter face. Inaccuracy of the meter will be indicated by increased torque required and/or increase of vibration levels due to ice buildup. If failure or inaccuracy is suspected, with no other indicated failures, the system can be manually controlled.

1. BLADE DEICE panel MODE switch - MANUAL as required.

If vibration levels increase or torque required increases:

2. MANUAL icing MODE selection - Increase.

If ice buildup continues:

3. Land as soon as practicable.

9-95. LOSS OF NO.1 OR NO.2 GENERATOR DURING BLADE DEICE OPERATION.

Loss of one generator during blade deice operation will result in loss of power to the system. To restore system operation, the APU must be started and the APU generator switch placed ON. The APU ON advisory message will not go on because one main generator is still operating. The APU generator will supply power only for blade deice operation.

EMER APU START.

9-96. CARGO HOOK EMERGENCY RELEASE.

WARNING

The cyclic EMERG REL switch or HOVER TRIM CONTROL panel SAFE EMER SHEAR switch will release both the cargo load and rescue hoist load when both systems are turned on. If emergency release of the cargo hook load is required, ensure RESCUE HOIST control panel switch is at the OFF position.

1. Cockpit RESCUE HOIST switch - OFF.
2. CARGO HOOK EMERG REL switch NORM.
3. Pilot or copilot cyclic EMER REL switch or crewmember HOVER TRIM CONTROL panel

SAFE EMER SHEAR switch - Actuate. The CARGO HOOK OPEN advisory message will remain on until explosive cartridge has been replaced.

9-97. HOIST FAILURES.

9-98. CABLE CUT.

WARNING

The cyclic EMERG REL switch or HOVER TRIM CONTROL panel SAFE EMER SHEAR switch will release both the cargo load and rescue hoist load when both systems are turned on. If emergency release of the rescue hoist load is required, ensure CARGO HOOK ARMING CONTR switch is at the SAFE position.

NOTE

When the RESCUE HOIST panel switch is at the ALL position, both the cyclic EMERG REL and HOVER TRIM CONTROL panel SAFE EMER SHEAR switches can release the rescue hoist load.

To cut cable from cockpit:

1. Cockpit RESCUE HOIST switch - CKPT or ALL, HOIST ARMED advisory message will illuminate.
2. CARGO HOOK EMERG REL switch - OPEN.
3. Cyclic EMER REL switch - Press.
3. To cut cable from cabin:
4. Cockpit RESCUE HOIST switch - ALL, HOIST ARMED annunciator message will illuminate.
5. CARGO HOOK EMERG REL switch - OPEN.
6. SAFE EMER SHEAR switch (crewmember HOVER TRIM CONTROL panel) - Activate.

9-99. JAMMED HOIST CABLE.

WARNING

If the hoist jams, do not attempt to raise or lower any further as this could shear the cable.

1. Cease hoisting.
2. If cable is free of personnel/cargo or light in weight - Hand wind cable into cabin and secure.
3. If personnel/equipment are connected to the cable - Lower aircraft and attempt to set personnel/cargo down, if possible.
4. Shear cable as situation dictates (see cable cut emergency procedure).

9-100. RUNAWAY HOIST.

1. Cabin RESCUE HOIST panel BACKUP CONTROL POWER switch - Select (NORMAL POWER light off)

If load cannot be recovered with HOIST UP/DOWN switch:

2. Lower load with aircraft or shear cable (see Cable Cut).

9-101. FOULED CABLE.

During hoisting operation if it appears that the cable has become fouled or otherwise attached to any surface object (tree, ship's rail, etc.) the crewman shall do the following:

1. Hoist cable - Slacken.
2. Inform pilot.

9-102. MISSION SYSTEM MALFUNCTIONS.

9-103. COMPUTER SYNC LOSS ADVISORY MESSAGE.

Mission processor internal failures may cause the COMPUTER SYNC LOSS advisory message to illuminate. This indicates that the two mission processors are not achieving the same solutions. A Mission COMPUTER 1 PRIME or 2 PRIME advisory message indicates that a change of bus control has taken place. The following procedure will effect a recovery from non-hardware faults:

1. Data entry operations - Discontinue.
2. Equipment status table - Press T5 (SYST) key, then press L3 (EQP STAT) key.
3. Check STAT column for fault code to determine which mission processor (MP) is malfunctioning (refer to paragraph 3-37, Equipment Status Pages, if required.

If a MP indicates a fault:

NOTE

The (P) symbol adjacent to MP1 or MP2 denotes which MP is currently processing IASS data.

4. MP - Press L1 (SEQ▲) or L2 (EQP▼) key to sequence pointer adjacent to the faulty MP.

If malfunction occurred as a result of a power interruption:

5. Pressing MFD R3 (CLR) key on equipment status page may clear this fault.
6. Initialize - Press R4 (INIT) key twice.

If initializing MP fails to clear the malfunction:

7. Turn off the malfunctioning MP by pulling appropriate circuit breaker (MP1 or MP2).
8. Land as soon as practicable.

If neither MP indicates a fault:

9. Initialize the backup MP. Displays will blank for approximately 1 second.

9-104. DUAL MP FAILURE.

Dual MP failures should be suspected when defaults displays are present on all MFDs (Figure 9-4). MFD displays will not respond to any key selection. The pilot must refer to backup instruments for all flight data.

Land as soon as possible.

9-105. RTU 1 FAIL OR RTU 2 FAIL CAUTION MESSAGE.

In the event of a complete failure of an RTU, the majority the failed RTU's aircraft data reporting responsibilities will be handled by the other RTU automatically. Refer to Table 3-4 for avionic equipment that is not backed up by the other RTU.

1. Equipment status table - Press T5 (SYST) key, then press L3 (EQP STAT) key.
2. Remote Terminal Unit (RTU) - Press L1 (SEQ▲) or L2 (EQP▼) key to sequence pointer adjacent to faulty RTU.
3. Check STAT column of suspected RTU for fault code (refer to paragraph 3-37, Equipment Status Pages, if required).

If a RTU indicates a fault:

4. Initialize - Press R4 (INIT) key twice.
5. Clear - Press R1 (CLR) key twice to clear fault.

If RTU still indicates a fault:

NOTE

Test function is not available when aircraft has weight off wheels.

6. Test - Press R3 (TEST) key twice.
7. Clear - Press R1 (CLR) key twice to clear fault.

If RTU still indicates a fault:

8. Pull appropriate RTU circuit breakers on the No.1 or No.2 ac primary and dc primary buses.
9. Wait approximately 10 seconds, then reset the RTU circuit breakers.

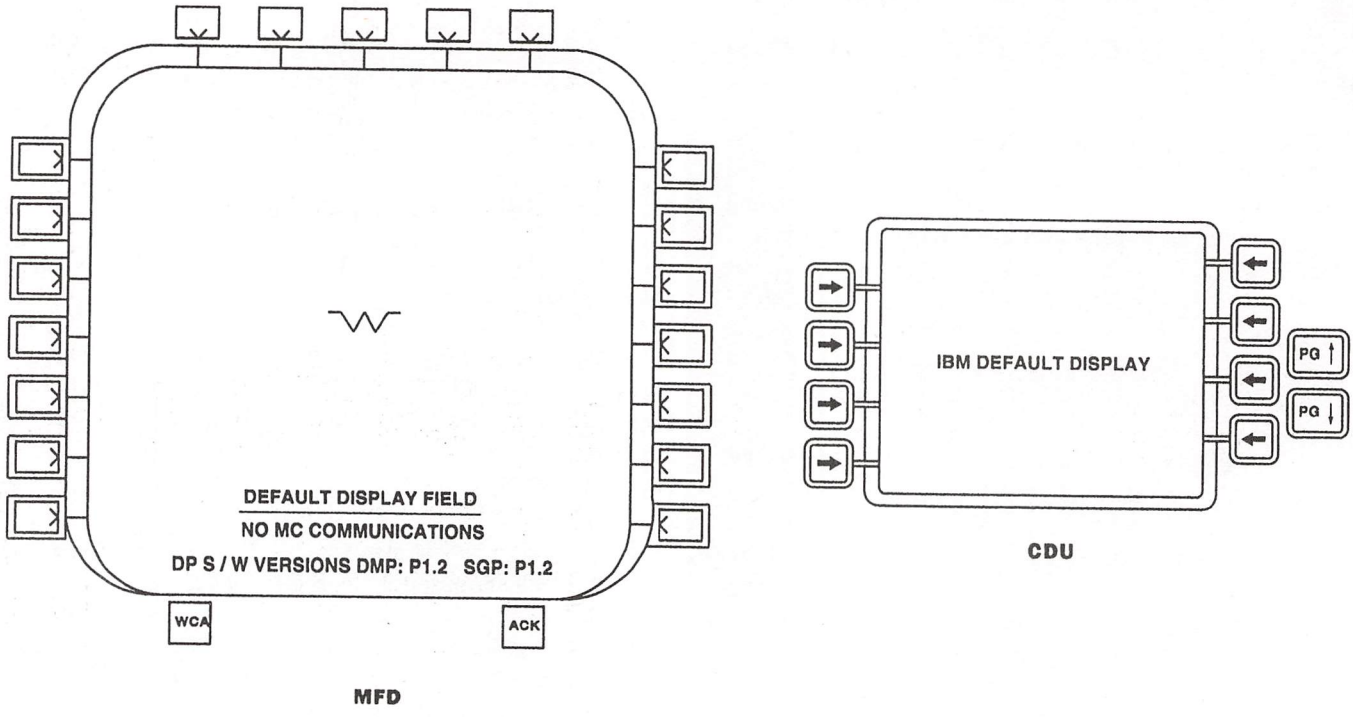

Figure 9-4. MFD and CDU Inoperative System Default Displays

If RTU still indicates a fault:

10. Clear - Press R1 (CLR) key twice to clear fault.

11. Repeat steps 4. through 7.

If RTU still indicates a fault:

12. Land as soon as practicable.

9-106. RTU 1 FAIL AND RTU 2 FAIL CAUTION MESSAGES.

Loss of both RTU1 and RTU2 will cause a loss of all aircraft data.

1. Equipment status table - Press T5 (SYST) key, then press L3 (EQP STAT) key.

2. Check STAT column of RTUs for fault code (refer to paragraph 3-37, Equipment Status Pages, if required).

If RTUs indicate a fault:

3. RTU - Press L1 (SEQ▲) or L2 (EQP▼) key to sequence pointer adjacent to RTU1.

4. Initialize - Press R4 (INIT) key twice.

5. Repeat steps 3. and 4. for RTU2.

If initialization was unsuccessful:

NOTE

Test function is not available when aircraft has weight off wheels.

6. Test - Press R3 (TEST) key twice.

7. Repeat steps 3. and 6. for RTU2.

If test was unsuccessful:

8. Pull RTU1 circuit breakers on No.1 ac primary and dc primary buses.

9. Wait 10 seconds, then reset RTU1 circuit breakers.

10. Repeat steps 8. through 9. for RTU2 circuit breakers on the No.2 ac primary and dc primary buses.

11. Repeat steps 3. through 7. if necessary.

If RTU data cannot be restored:

12. Land as soon as practicable.

9-107. DISPLAY MALFUNCTIONS.

9-108. MFD PL, MFD PR, MFD CPL, OR MFD CPR FAIL ADVISORY MESSAGE OR BLANK MFD DISPLAY.

When an MFD or CDU fail advisory message appear or a blank MFD display, it is possible to reinitialize the failed display in an attempt to clear the fault.

1. Equipment status table - Press T5 (SYST) key, then press L3 (EQP STAT) key.

2. Check STAT column of multi-function displays (MFDs) and control display unit (CDU) for fault code (refer to paragraph 3-37, Equipment Status Pages, if required).

If MFD or CDU indicates a fault:

3. MFD/CDU - Press L1 (SEQ▲) or L2 (EQP▼) key to sequence pointer adjacent to faulty MFD/CDU.

4. Initialize - Press R4 (INIT) key twice.

5. Repeat steps 3. and 4. for any other faulty MFD/CDU.

If initialization was unsuccessful:

NOTE

Test function for MFDs is not available when aircraft has weight off wheels.

To remove MFD test pattern, press MFD ACK key.

6. Test - Press R3 (TEST) key twice.

If test was unsuccessful:

7. If MFD is faulty, cycle MFD mode select switch to OFF, then back to AUTO.

8. If CDU is faulty, pull the appropriate CDU circuit breakers on the No.1 or No.2 ac primary and dc primary bus, wait 10 seconds, then reset circuit breakers.

If circuit breaker reset was unsuccessful:

9. Land as soon as practicable.

9-109. FLASHING DISPLAY DATA.

Do not take action on flashing display data. Flashing display data indicates unreliable data.

9-110. ABNORMAL DISPLAY (PILOT'S MFDs AND CDU OR COPILOT'S MFDs AND CDU), OR DP P OR DP CP FAIL ADVISORY MESSAGE.

Certain critical failures within a Display Processor (DP) will affect the pilot or copilot displays. Successful mission completion may be jeopardized. Abnormal displays such as missing key legends may be cleared when step 1. below is performed. It is possible to reinitialize the display processor in an attempt to clear the fault.

1. Equipment status table - Press T5 (SYST) key, then press L3 (EQP STAT) key.

2. Check STAT column of display processors (DPs) for fault code (refer to paragraph 3-37, Equipment Status Pages, if required).

NOTE

The symbol (B) indicates which displays (MFDs and CDU) are being backed up by the operational display processor.

3. DP - Press L1 (SEQ▲) or L2 (EQP▼) key to sequence pointer adjacent to faulty DP.

4. Initialize - Press R4 (INIT) key twice.

If display is still faulty:

5. Test - Press R3 (TEST) key twice.

If display is still faulty:

6. DP1 (copilot) or DP2 (pilot) circuit breaker - Pull appropriate DP circuit breaker and wait 10 seconds, then reset circuit breaker.

If display is not restored:

7. Land as soon as practicable.

9-111. EQUIPMENT MALFUNCTION RECOVERY.

Equipment failures may be identified by operator recognition of abnormal indications from a equipment operation, warning message, caution message, or advisory message. If an attempt to reenter data fails or reactivate a function fails, the pilot should attempt to reinitialize the suspected equipment by using the INIT function on the equipment status pages, if it is available. If the INIT function is not available or does not succeed, activate test function. If test function fails, then recycle the circuit breaker or power switch to the equipment. To test or initialize equipment, perform the following steps:

1. Equipment status table - Press T5 (SYST) key, then press L3 (EQP STAT) key. Press R5 (PG▲) or R6 (PG▼) to display equipment page listing malfunctioning equipment.

2. Check STAT column of malfunctioning equipment for fault code (refer to paragraph 3-37, Equipment Status Pages, if required).

If equipment indicates a fault:

3. Equipment - Press L1 (SEQ▲) or L2 (EQP▼) key to sequence pointer adjacent to malfunctioning equipment.

4. Initialize/test as desired with R3/R4 (TEST/ INIT) key, if available.

5. Check STAT and TEST results.

9-112. EQUIPMENT OVERTEMPERATURE.

The mission equipment components are provided with over temperature sensors. If multiple components are overheating the most likely cause is an exhaust fan failure. The fan circuit breaker should be checked and the avionics cooling console switch on the back of the right avionics rack set to test. This switch is not label. This switch is sping loaded to the down position which is normal. Pressing the switch upward should cause to fans to come on if the AVIONICS COOLING circuit breakers on the lower console are pressed in and the fans are operative. This will override a malfunctioning thermostat, forcing the fans on. If an isolated component is overheating, failure or loss of that component is imminent.

Table 9-1. AFCS Fail Advisory Matrix

FAIL ADVISORY LIGHT ON	SYSTEM	FUNCTIONAL DESCRIPTION
CPLR	Approach/Hover/Depart	Approach/Hover/Depart capability loss. ATT, A/S, or ALT light may also on.
CORD	Turn Coordination	Turn coordination is lost if AUG or SAS 1 and SAS 2, or A/S light is on.
CH	Crew Hover	Loss of crew hover mode.
AUG	Longitudinal and Lateral Hover Augmentation	Loss of hover augmentation. ATT, or SAS 1 and SAS 2 may also be on.
ATT	Pitch and Roll Attitude Hold	Pitch or roll attitude hold has been lost. If TRIM is also on, both pitch and roll attitude has been lost. If pitch attitude failure the airspeed hold is also not available.
A/S	Airspeed Hold	Airspeed hold is lost. The autopilot may continue to hold pitch attitude unless a failure of pitch attitude hold occurs, in which case the ATT light would go on.
HDG	Heading Hold	Heading hold has been lost or the ability to synchronize heading hold has been lost, or collective to yaw electronic coupling has been lost.
ALT	Barometric or Radar altitude hold engaged	If barometric altitude hold was engaged, altitude hold is lost. If radar altitude hold is desired it must be selected manually. If radar altitude hold was engaged barometric hold will automatically engage, unless the type of failure prevents all altitude hold operations.
SAS 1	SAS 1 Pitch, SAS 1 Roll, SAS 1 YAW	A malfunction has occurred causing improper pitch, roll, or yaw SAS 1 operation. SAS 1 should be disengaged to ensure proper SAS 2 operation.
BIAS	Pitch Bias	Loss or modified operation of the pitch bias actuator occurs if the BIAS light goes on. An airspeed failure causes the pitch bias actuator to move to a position corresponding to 120 KIAS. The bias actuator continues to function about this 120 knot reference. The A/S light should also be on if airspeed is the cause of the BIAS light. A vertical gyro (pitch) failure causes the bias actuator to move to the center position. The bias actuator now stays at this position. The ATT light should also be on if attitude is the cause of the BIAS light. A dual pitch rate gyro failure will cause the bias actuator to lose it's pitch rate damping ability, however, the bias actuator will continue to function for attitude and airspeed inputs. SAS 1 and SAS 2 light will also be on if the pitch rate gyros are the cause of the failure. If the pitch bias actuator is not responding to computer commands, it will stop wherever it is positioned at that time. No other fail advisory lights are coupled with the BIAS light for this problem.

Table 9-1. AFCS Fail Advisory Matrix (Cont)

FAIL ADVISORY LIGHT ON	SYSTEM	FUNCTIONAL DESCRIPTION
SAS 2	SAS 2 Pitch, SAS 2 Roll, SAS 2 Yaw	Any combination of SAS 2 axis failure causes the affected axis to automatically disengage. If SAS 2 and SAS 1 fail advisory lights go on, turn off SAS 1.
TRIM	Pitch Trim Actuator, Roll Trim Actuator, Yaw Trim Actuator, Collective Trim Actuator	Cyclic pitch and roll stick Yaw pedal trim, or collective stick trim is lost. Any combination of these will also cause the TRIM light to activate.
Computer Power Malfunction (No Light)	Primary power to the DAFCS computer	A computer power interruption has occurred. All autopilot computer output signals are lost. To attempt to regain computer operation, press CMPTR PWR/RESET switch. Loss of all automatic flight control system functions except SAS 1, boost, and stabilator will cause the AFCS DEGRADED light to illuminate.

NOTE: Use the AKNL ADVS switch to acknowledge the failure of an AFCS system and to reset the MASTER CAUTION light for subsequent failures. To reset the computer for any mode failure (except power interruption) press to reset, as appropriate, any one of the FAIL ADVISORY MODE RESET switches (switches are under the lights).

If the CMPTR PWR/RESET switch is on, and SAS 2 is off, pressing any one of the three FAIL ADVISORY MODE RESET switches will cause SAS 2 to go on. This is a backup means of engaging SAS 2.

Section III WARNING AND CAUTION MESSAGES

Warnings and Cautions are listed in alphabetical order (Table 9-2). Messages are assigned a priority by the IASS. When a caution message of higher priority appears on an MFD, a lower priority caution message should be concealed. A down arrow should be desplayed adjacent the caution indicating multiple messages. Therefore, when acknowledging a caution message, look for additional messages to be displayed.

Table 9-2. Warnings and Cautions Priority List

ALERT	PILOT ACTION
	WARNINGS - Master Warning Panels
#1 ENG OUT	Refer to paragraphs 9-9 and 9-10, emergency procedure for Single engine Failure - General.
#2 ENG OUT	Refer to paragraphs 9-9 and 9-10, emergency procedure for Single engine Failure - General.
FIRE	Refer to paragraph 9-39, emergency procedure for Engine Fire In Flight.
LOW ROTOR RPM	Refer to paragraph 9-14, emergency procedure for Decreasing NR.
MASTER CAUTION	Determine failed system and take appropriate action.
	WARNINGS - MFDS
HYD FAIL	Refer to paragraph 9-61, emergency procedure for HYD FAIL Warning Messages On.
OBSTACLE	Perform evasive maneuvers to avoid obstacle if required.
	CAUTIONS - MFDS
#1& #2 HYD PUMP FAIL	Refer to paragraph 9-64, emergency procedure for #1 & #2 HYD PUMP FAIL Caution Message On.
#1 CONV FAIL	Refer to paragraph 9-57, emergency procedure for #1 or #2 CONV FAIL Caution Message On.
#1 FUEL TANK LO	None.
#1 GEN BEARING	If caution message remains on for more than 1 minute, make an entry on DA Form 2408-13.
#1 GEN FAIL	Refer to paragraph 9-55, emergency procedure for #1 or #2 GEN FAIL Caution Message On.
#1 HYD PUMP FAIL	Refer to paragraph 9-62, emergency procedure for #1 HYD PUMP FAIL Caution Message On.
#1 INPUT CHIP	Refer to paragraph 9-33, emergency procedure for CHIP INPUT LH or RH Caution Message On.
#1 NG SPEED HI	Refer to paragraph 9-17, emergency procedure for #1 NG SPEED HI or #2 NG SPEED HI Caution Message On.
#1 NP SPEED HI	Refer to paragraph 9-15, emergency procedure for Increasing NR.
#1 NP SPEED LO	Refer to paragraph 9-14, decreasing NR.

Table 9-2. Warnings and Cautions Priority List (Cont)

ALERT	PILOT ACTION
#1 PUMP/#1+BKUP RSVR	Refer to paragraph 9-67, emergency procedure for #1 PUMP/RSVR LO/BUON Caution Message On.
#1 PUMP/BKUP FAIL	Refer to paragraph 9-65, emergency procedure for #1 or #2 HYD PUMP FAIL Caution Message On and BKUP HYD PUMP ON Advisory Message Off.
#1 PUMP/RSVR LO/BUON	Refer to paragraph 9-67, emergency procedure for #1 PUMP/RSVR LO/BUON Caution Message On.
#1 TAIL SERVO FAIL	Refer to paragraph 9-31, emergency procedure for TR #1 SERVO/BKUP FAIL CAUTION MESSAGE ON.
#2 CONV FAIL	Refer to paragraph 9-57, emergency procedure for #1 or #2 CONV FAIL Caution Message On.
#2 FUEL TANK LO	None.
#2 GEN BEARING	If caution message remains on for more than 1 minute, make an entry on DA Form 2408-13.
#2 GEN FAIL	Refer to paragraph 9-55, emergency procedure for #1 or #2 GEN FAIL Caution Message On.
#2 HYD PUMP FAIL	Refer to paragraph 9-63, emergency procedure for #2 HYD PUMP FAIL Caution Message On.
#2 INPUT CHIP	Refer to paragraph 9-33, emergency procedure for CHIP INPUT LH or RH Caution Message On.
#2 NG SPEED HI	Refer to paragraph 9-17, emergency procedure for #1 NG SPEED HI or #2 NG SPEED HI Caution Message On.
#2 NP SPEED HI	Refer to paragraph 9-15, emergency procedure for Increasing NR.
#2 NP SPEED LO	Refer to paragraph 9-14, decreasing NR.
#2 PUMP/#2+BKUP RSVR	Refer to paragraph 9-68, emergency procedure for #2 PUMP/RSVR LO/BUON Caution Message On.
#2 PUMP/BKUP FAIL	Refer to paragraph 9-65, emergency procedure for #1 or #2 HYD PUMP FAIL Caution Message On and BKUP HYD PUMP ON Advisory Message Off.
#2 PUMP/RSVR LO/BUON	Refer to paragraph 9-67, emergency procedure for #2 PUMP/RSVR LO/BUON Caution Message On.
AC ESS BUS OFF	Refer to paragraph 9-56, emergency procedure for #1 and #2 CONV FAIL Caution Message On.
AFCS DEGRADED	Analyze condition and reset AFCS FAIL ADVISORY MODE RESET switches.
AHRS FAIL	None.
APU FAIL	1. APU CONTR switch - OFF. 2. Do not attempt another start until BITE indicators are checked to determine cause of shutdown.
APU OIL HOT	Refer to paragraph 9-38, emergency procedure for APU OIL HOT Caution Message On.

Table 9-2. Warnings and Cautions Priority List (Cont)

ALERT	PILOT ACTION
AVIONICS COOLING	Refer to paragraph 9-112, emergency procedure for EQUIPMENT OVERTEMPERATURE.
BATT LO CHARGE	Refer to paragraph 9-59, emergency procedure for BATT LO CHARGE Caution Message On.
BATTERY FAIL	Refer to paragraph 9-58, emergency procedure for BATTERY FAIL Caution Message On.
BKUP PUMP FAIL	Usually active in conjunction with other caution messages.
BKUP RSVR LO	None.
BLNKR FAIL	None.
BOOST SERVO OFF	Refer to paragraph 9-72, emergency procedure for BOOST SERVO OFF Caution Message On.
CW JAM FAIL	None.
CWWR FAIL	None.
DC ESS BUS FAIL	None.
DISPNSR FAIL	None.
DRV SHAFT #1 FAIL	Refer to paragraph 9-22, emergency procedure for Engine High-speed Shaft Failure.
DRV SHAFT #2 FAIL	Refer to paragraph 9-22, emergency procedure for Engine High-speed Shaft Failure.
ENG 1 CHIPS	Refer to paragraphs 9-21, emergency procedure for ENG 1 or ENG 2 CHIPS, ENG 1 or ENG 2 OIL PRESS LO/HI, ENG 1 or ENG 2 OIL HOT, or ENG TEMP HI Caution Message On.
ENG 1 FUEL BYPASS	Refer to paragraph 9-49, emergency procedure for ENG 1 or ENG 2 FUEL BYPASS Caution Message On.
ENG 1 FUEL PRESS LO	Refer to paragraph 9-52, emergency procedure for ENG 1 or ENG 2 FUEL PRESS LO Caution Message On.
ENG 1 OIL BYPASS	Refer to paragraph 9-20, emergency procedure for ENG 1 or ENG 2 OIL BYPASS Caution Message On.
ENG 1 OIL HOT	Refer to paragraph 9-21, emergency procedure for ENG 1 or ENG 2 CHIPS, ENG 1 or ENG 2 OIL PRESS LO/HI, ENG 1 or ENG 2 OIL HOT, or ENG TEMP HI Caution Message On.
ENG 1 OIL PRESS HI	Refer to paragraph 9-21, emergency procedure for ENG 1 or ENG 2 CHIPS, ENG 1 or ENG 2 OIL PRESS LO/HI, ENG 1 or ENG 2 OIL HOT, or ENG TEMP HI Caution Message On.
ENG 1 OIL PRESS LO	Refer to paragraph 9-21, emergency procedure for ENG 1 or ENG 2 CHIPS, ENG 1 or ENG 2 OIL PRESS LO/HI, ENG 1 or ENG 2 OIL HOT, or ENG TEMP HI Caution Message On.
ENG 1 STRT VLV OPEN	Normally illuminated during engine start. If caution message remains on after engine start, manually pull out on engine power condition lever to disengage starter. If caution message is still on, pull NO.1 ENG START circuit breaker on upper console.

Table 9-2. Warnings and Cautions Priority List (Cont)

ALERT	PILOT ACTION
ENG 2 CHIPS	Refer to paragraph 9-21, emergency procedure for ENG 1 or ENG 2 CHIPS, ENG 1 or ENG 2 OIL PRESS LO/HI, ENG 1 or ENG 2 OIL HOT, or ENG TEMP HI Caution Message On.
ENG 2 FUEL BYPASS	Refer to paragraph 9-49, emergency procedure for ENG 1 or ENG 2 FUEL BYPASS Caution Message On.
ENG 2 FUEL PRESS LO	Refer to paragraph 9-52, emergency procedure for ENG 1 or ENG 2 FUEL PRESS LO Caution Message On.
ENG 2 OIL BYPASS	Refer to paragraph 9-20, emergency procedure for ENG 1 or ENG 2 OIL BYPASS Caution Message On.
ENG 2 OIL HOT	Refer to paragraph 9-21, emergency procedure for ENG 1 or ENG 2 CHIPS, ENG 1 or ENG 2 OIL PRESS LO/HI, ENG 1 or ENG 2 OIL HOT, or ENG TEMP HI Caution Message On.
ENG 2 OIL PRESS HI	Refer to paragraph 9-21, emergency procedure for ENG 1 or ENG 2 CHIPS, ENG 1 or ENG 2 OIL PRESS LO/HI, ENG 1 or ENG 2 OIL HOT, or ENG TEMP HI Caution Message On.
ENG 2 OIL PRESS LO	Refer to paragraph 9-21, emergency procedure for ENG 1 or ENG 2 CHIPS, ENG 1 or ENG 2 OIL PRESS LO/HI, ENG 1 or ENG 2 OIL HOT, or ENG TEMP HI Caution Message On.
ENG 2 STRT VLV OPEN	Normally illuminated during engine start. If caution message remains on after engine start, manually pull out on engine power condition lever to disengage starter. If caution message is still on, pull NO.2 ENG START circuit breaker on pilot's circuit breaker panel.
ENG TEMP HI	Refer to paragraph 9-21, emergency procedure for ENG 1 or ENG 2 CHIPS, ENG 1 or ENG 2 OIL PRESS LO/HI, ENG 1 or ENG 2 OIL HOT, or ENG TEMP HI Caution Message On.
FLIR FAIL	No action required.
GUST LOCK ON	None.
HI ROTOR RPM	Refer to paragraph 9-15, emergency procedure for Increasing NR.
HYDR RSVR 1 LO	None. Logic modules automatically control the hydraulic system.
HYDR RSVR 2 LO	None. Logic modules automatically control the hydraulic system.
ICE DETECTED	1. Check OAT. 2. Visually confirm ice buildup if possible. 3. Turn rotor blade deice on if situation continues. 4. Descend to a warmer environment.

Table 9-2. Warnings and Cautions Priority List (Cont)

ALERT	PILOT ACTION
	WARNING
	During hostile conditions, this caution may indicate the aircraft has been identified as a hostile target.
IFF MODE 4 FAIL	Check appropriate MODE controls on IFF MFD and CDU pages.
INTMD XMSN CHIP/TEMP	Refer to paragraph 9-34, emergency procedure for MAIN XMSN CHIP, LH or RH AGB CHIP/TEMP, TAIL XMSN CHIP/TEMP, or INTMD XMSN CHIP/TEMP Caution Message On.
INU FAIL	Refer to paragraph 9-79, AFCS DEGRADED Caution Message On.
IRJAM FAIL	None.
LFT PITOT HEAT FAIL	Check circuit breaker is In. Avoid icing conditions.
LH AGB CHIP	Refer to paragraph 9-34, emergency procedure for MAIN XMSN CHIP, LH or RH AGB CHIP/TEMP, TAIL XMSN CHIP/TEMP, or INTMD XMSN CHIP/TEMP Caution Message On.
MAIN XMSN CHIP	Refer to paragraph 9-34, emergency procedure for MAIN XMSN CHIP, LH or RH AGB CHIP/TEMP, TAIL XMSN CHIP/TEMP, or INTMD XMSN CHIP/TEMP Caution Message On.
MN XMSN OIL HOT	Refer to paragraph 9-32, emergency procedure for MN XMSN PRESS LO/MN XMSN PRESS HI/MN XMSN OIL HOT Caution Message On or Main Transmission Pressure Low/Main Transmission Pressure High.
MN XMSN PRESS HI	Refer to paragraph 9-32, emergency procedure for MN XMSN PRESS LO/MN XMSN PRESS HI/MN XMSN OIL HOT Caution Message On or Main Transmission Pressure Low/Main Transmission Pressure High.
MN XMSN PRESS LO	Refer to paragraph 9-32, emergency procedure for MN XMSN PRESS LO/MN XMSN PRESS HI/MN XMSN OIL HOT Caution Message On or Main Transmission Pressure Low/Main Transmission Pressure High.
MR DEICE FAIL	Refer to paragraph 9-92, emergency procedure for MR DEICE FAULT, MR DEICE FAIL, or TR DEICE FAIL Caution Message On.
MR DEICE FAULT	Refer to paragraph 9-92, emergency procedure for MR DEICE FAULT, MR DEICE FAIL, or TR DEICE FAIL Caution Message On.
NO FUEL TRANSFER	Refer to paragraph 9-42, emergency procedures for Fuel System Malfunctions.
PRI SERVO 1 PRESS LO	Refer to paragraph 9-66, emergency procedure for PRI SERVO 1 or 2 PRESS LO Caution Message On.
PRI SERVO 2 PRESS LO	Refer to paragraph 9-66, emergency procedure for PRI SERVO 1 or 2 PRESS LO Caution Message On.
RADAR FAIL	Discontinue use of radar navigation.
RALT FAIL	Discontinue use of RAD ALT information on MFDs.

Table 9-2. Warnings and Cautions Priority List (Cont)

ALERT	PILOT ACTION
RF JAM FAIL	None.
RG AGB CHIP	Refer to paragraph 9-34, emergency procedure for MAIN XMSN CHIP, LH or RH AGB CHIP/TEMP, TAIL XMSN CHIP/TEMP, or INTMD XMSN CHIP/TEMP Caution Message On.
ROTOR BRAKE ON	Refer to paragraph 9-27, emergency procedure for ROTOR BRAKE ON Caution Message On.
RT PITOT HEAT FAIL	Check circuit breaker is In. Avoid icing conditions.
RTU1 FAIL	Refer to paragraph 9-105, emergency procedure for RTU1 FAIL or RTU2 FAIL Caution Message.
RTU2 FAIL	Refer to paragraph 9-105, emergency procedure for RTU1 FAIL or RTU2 FAIL Caution Message.
RWR FAIL	None.
SAS FAIL	Refer to paragraph 9-82, emergency procedure for SAS FAIL Caution Message On.
STABILATOR FAIL	Refer to paragraph 9-89, emergency procedure for Stabilator Malfunction - Auto Mode Failure.
TAIL XMSN CHIP/TEMP	Refer to paragraph 9-34, emergency procedure for MAIN XMSN CHIP, LH or RH AGB CHIP/TEMP, TAIL XMSN CHIP/TEMP, or INTMD XMSN CHIP/TEMP Caution Message On.
TR #1 SERVO/BKUP FAIL	Refer to paragraph 9-31, emergency procedure for TR #1 SERVO/BKUP FAIL Caution Message On.
TR DEICE FAIL	Refer to paragraph 9-92, emergency procedure for MR DEICE FAULT, MR DEICE FAIL, or TR DEICE FAIL Caution Message On.
TR QDRNT FAIL	Refer to paragraphs 9-28 and 9-29, emergency procedures for TR QDRNT FAIL Caution Message.
VWS FAIL	None.

APPENDIX A

REFERENCES

AR 70-50	Designating and Naming Military Aircraft, Rockets and Guided Missiles
AR 95-1	Army Aviation General Provisions and Flight Regulations
AR 95-3	General Provisioning, Training, Standardization, and Research Management
AR 95-16	Weight and Balance, Army Aircraft
AR 385-40	Accident Reporting and Records
CV NATOPS Manual	Navy Shipboard procedures of Carrier Vehicles
DA PAM 738-751	Functional Users Manual for the Army Maintenance Management System Aviation (TAMMS-A)
DOD FLIP	Flight Information Publication
FAR Part 91	Federal Air Regulation, General Operating and Flight Rules
FM 1-202	Environmental Flight
FM 1-203	Fundamentals of Flight
FM 1-204	Night Flight Techniques and Procedures
FM 1-230	Meteorology for Army Aviators
FM 1-240	Instrument Flying and Navigation for Army Aviators
FM 10-68	Aircraft Refueling
FM 55-450-1	Army Helicopter External Load Operations
FM 55-450-2	Army Helicopter Internal Load Operations
NWP-42 Series	Shipboard helicopter operating prodedures
TB MED 501	Noise and Conservation of Hearing
TB 55-9150-200-25	Engine and Transmission Oils, Fuels, and Additives for Army Aircraft
TM 1-1520-250-CL	Operator's and Crewmember's Checklist, Army Model MH-60K Helicopters
TM 9-1095-206-13&P	Operator's Aviation Unit Maintenance and Aviation Intermediate Maintenance Manual For Dispenser, General Purpose Aircraft: XM130
TM 11-5821-318-30P	VHF Radio, AN/ARC-186
TM 11-5826-258-20P	VOR/ILS Radio, AN/ARN-123
TM 11-5841-291-12	CW Radar Warning Receiver, AN/APR-44(V)
TM 11-5841-294-12	Pulse Radar Warning Receiver, AN/APR-39A(V)
TM 11-5841-293-20P	Doppler Radar, AN/ASN-137
TM 11-5865-200-12	Infrared Countermeasure Set, AN/ALQ-144(V)
TM 11-5865-202-12	Pulse Radar Jammer, AN/ALQ-136 (V)

APPENDIX A (Cont)

TM 11-5865-229-12	CW Radar Jammer, AN/ALQ-162(V)
TM 55-1500-328-23	Aeronautical Equipment Maintenance Management Policy and Procedures
TM 55-1500-342-23	Army Aviation Maintenance Engineering Manual: Weight and Balance
TM 750-244-1-5	Procedures for the Destruction of Aircraft and Associated Equipment to Prevent Enemy Use

APPENDIX B

ABBREVIATIONS AND TERMS

AC	Alternating Current
ADF	Automatic Direction Finder
ADS	ANVIS Display System
ADSS	ANVIS Display Symbology System
AFCS	Automatic Flight Control System
AGL	Above Ground Level
AHRS	Attitude & Heading Reference System
AIU	Avionics Interface Unit
ALT	Altitude
AM	Amplitude Modulation
ANVIS	Aviator's Night Vision Imaging System
ASE	Aircraft Survivability Equipment
ATF	Aircraft Torque Factor
ATHS	Airborne Target Handover System
BAI	Backup Attitude Indicator
BAR ALT	Barometric Altimeter
BBU	Battery Backup Unit
BIT	Built-In Test
°C	Degree Celsius
CBIT	Continuous Built-in-test
CDU	Control Display Unit
CEP	Circular Error Probability
CG	Center of Gravity
CMFD	Color Multi-Functional Display
CRT	Cathode Ray Tube
CW	Continuous Wave
DAFCS	Digital Automatic Flight Control System
DC	Direct Current
DEC	Digital Electronic Control
DEG	Degree
DH	Decision Height
DME	Distance Measuring Equipment
DNS	Doppler Navigation System
DP	Display Processor
DTM	Data Transfer Module
E2	Exponential Elevation
ECCM	Electronic Counter-Counter Measures
ECM	Electronic Counter Measures
ELT	Emergency Locator Transmitter
EMI	Electromagnetic Interference
ENG	Engine
ENG TEMP	Engine Temperature; Turbine Gas Temperture
EOT	Element-On-Time
ESU	Electronic Sequence Unit
ETA	Estimated Time of Arrival
ETE	Estimated Time Enroute
ETF	Engine Torque Factor
ETI	Elapsed Time Indicator
ETL	Effective Translational Lift
ETS	External Tank System
°F	Degree Fahrenheit
F/D	Flight Director
FAT	Free-Air Temperature
FDD	Flight Deck Director
FDR	Flight Data Recorder
FLIR	Forward Looking Infrared
FM	Frequency Modulation
FOV	Field of View

APPENDIX B (Cont)

FPM	Feet-Per-Minute
FPS	Feet Per Second
FQI	Fuel Quantity Indicator
FRIES	Fast Rope Insertion and Extraction System
ft	Feet
g	Gravity
GM	Ground Map; Ground Mapping
GNDCOM	Ground Communications
GPS	Global Positioning System
GW	Gross Weight
HAT	Height Above Terrain
HCO	Helicopter Control Officer
HDG	Heading
HF	High Frequency
HIRSS	Hover Infrared Suppression System
HMU	Hydromechanical Unit
HOGE	Hover Out of Ground Effect
hr	Hour
HSD	Horizontal Situation Display
HSP	Hot Start Preventer
Hz	Hertz; Cycles Per Second
IAP	Integrated Avionics Program
IAS	Indicated Airspeed
IASS	Integrated Avionics Subsystem
IBIT	Initiated Built-in-test
IBU	Interference Blanker Unit
ICS	Intercommunication System
IFF	Identification, Friend or Foe
IFR	Instrument Flight Rule
IGE	In Ground Effect
ILS	Instrument Landing System
IMC	Instrument Meteorological Conditions
INU	Inertial Navigation Unit
IPS	Inlet Particle Separator
ips	Inches Per Second
IR	Infrared
IRCM	Infrared Countermeasures
KCAS	Knots Calibrated Airspeed
KHz	Kilohertz
KIAS	Knots Indicated Airspeed
KTAS	Knots True Airspeed
KW	Kilowatts
Km	Kilometer
LAW	Low Altitude Warning
lb	Pound(s)
lb/gal	Pounds-Per-Gallon
lb/hr	Pounds-Per-Hour
LF	Low Frequency
LOC	Localizer
LRU	Line Replaceable Unit
LSE	Landing Signal Person Enlisted
LSO	Landing Signal Officer
MAX	Maximum
MDG	Map Display Generator
MFD	Multi-Function Display
MHz	Megahertz
min	Minutes
MMFD	Monochrome Multi-Function Display
MMR	Multi-Mode Radar
MMS	Mission Management System
MP	Mission Processor
MSL	Mean Sea Level
MWR	Missile Warning Receiver
NAV	Navigation

APPENDIX B (Cont)

NG	No. 1 or No. 2 Engine Compressor Speed RPM
NM	Nautical Mile
NP	No. 1 or No. 2 Power Turbine
NR	Rotor RPM
NRP	Navigational Reference Point
NVG	Night Vision Goggles
ODV	Overspeed and Drain Valve
OEI	One Engine Inoperative
OGE	Out of Ground Effect
OMEGA	A High-Accuracy Radio Navigation System
OOD	Officer of the Deck
PA	Pressure Altitude
PLS	Personnel Locator System
PPM	Pounds-Per-Minute
PSI	Pounds Per Square Inch
PSID	Pounds Per Square Inch Differential
R/C	Rate of Climb
R/D	Rate of Descent
RDR ALT	Radar Altimeter
RAM	Random Access Memory
RF	Radio Frequency
MHI	Magnetic Heading Indicator
RNAV	Radio Navigation
RPM	Revolutions-Per-Minute
RT	Receiver/Transmitter
RTU	Remote Terminal Unit
RWR	Radar Warning Receiver
SATCOM	Satellite Communications
SGSI	Stabilized Glide Slope Indicator
SINCGARS	Single Channel Ground Airborne Radio Set
STD TEMP	15°C at Sea Level
TBD	To Be Determined
TF/TA	Terrain Following/Terrain Avoidance
TFU	Turret FLIR unit
TLS	Tactical Landing System
TQ	Torque
UHF	Ultra High Frequency
UTM	Universal Transverse Mercator
VFR	Visual Flight Rules
VHF	Very High Frequency
VMC	Visual Meteorological Conditions
VOR	VHF Omni Range
VOR/ILS	VHF Omni Range/Instrument Landing System
VORTAC	Combined VOR and TACAN
Vh	Maximum Level Flight Speed Using Torque Available
VNE	Airspeed Never to Exceed
VSD	Vertical Situation Display
WCA	Warning/Caution/Advisory
WOW	Weight-On-Wheels
WYPT	Waypoint

INDEX

Subject		Paragraph Figure, Table Number
#1 and #2		
#1 and #2 CONV FAIL Caution Messages On		9-56
#1 & #2 HYD PUMP FAIL Caution Messages On		9-64
#1 HYD PUMP FAIL Caution Message On		9-62
#1 NG or #2 NG SPEED HI Caution Message On		9-17
#1 or #2 CONV FAIL Caution Messages On		9-57
#1 or #2 FUEL TANK LO Caution Messages On		9-51
#1 or #2 GEN FAIL Caution Message On		9-55
#1 or #2 HYD PUMP FAIL Caution Message On and BKUP HYD PUMP ON Advisory Message Off		9-65
#1 PUMP/RSVR LO/BUON Caution Message On		9-67
#2 HYD PUMP FAIL Caution Message On		9-63
#2 PUMP/RSVR LO/BUON Caution Message On		9-68
A		
Abnormal Display (MFDs and CDUs)		9-110
	F	2-29
Accessory Module		2-134
Accessory Section Module		2-37
Accumulator Recharge		2-192
AC Power Supply System		2-181
AC Power System - General Block Diagram	F	2-26
AC Secondary Bus		2-183
ADF Normal Operation		3-141
Aerial Refueling Envelope		7-43
	F	7-38
Aerial Refueling System		2-236
AFCS and STABILATOR Control Panels	F	2-15
AFCS CONTROL Panel	T	2-4
AFCS Controls		2-98

INDEX (Cont)

Subject	Paragraph Figure, Table Number
AFCS DEGRADED Caution Message On	9-79
AFCS DEGRADED Message With AFCS FAIL Advisory ALT Light On - During Approach/Hover	9-86
AFCS FAIL Advisory Light(s) On	9-81
AFCS Fail Advisory Matrix	T 9-1
AFCS Malfunctions	9-78
After Emergency Action	9-4
After Landing Check	8-33
After Takeoff	8-30
AHRS Normal Operation	3-105
Air Data Computer Normal Operation	3-108
Air Data Computer	3-107
Aircraft Configuration Drag Changes	7-34
	T 7-1
Airborne Target Handover System (ATHS) CP-1516/ASQ	3-68
Air Request	3-83
	F 3-40
ATHS (Sit/Status, Spot, CAS, and BDA) Report Request	3-81
Authentication Code Presets Loading	3-77
AUTHENTICATION XMT and RCV Code Presets Page Flows	F 3-37
Battle Damage Assessment Report	3-79
Bulk Data Transfer Transmit Procedures	3-76
Capabilities	3-69
Casualty Report	3-80
CDU Default Page	F 3-34
Free Text, Message Presets, Check All, and Authentication Message	3-87
	F 3-44
Initialization and Setting Up Transceiving Nets	3-73
Inputted Data Zeroizing	3-74
Menu Control Page Access	3-71
Message and Movement Preset Entries	3-75
Movement Command/Report	3-84

INDEX (Cont)

Subject		Paragraph Figure, Table Number
Movement Command/Report	F	3-41
Message and Movement Preset Entries		3-75
Received Messages		3-86
	F	3-43
STATUS of Own and Other Subscribers Weapons and Preset Position		3-85
	F	3-42
SIT/STATUS, BDA, CAS, and REQUEST Reports Page Flows	F	3-38
Situation/Status Report		3-78
Spot Report		3-82
	F	3-39
Start Pages		3-72
Test, NETs STATUS, and SUB NET ASGNMTS Page Flows	F	3-35
Top Menu Page Flows	F	3-33
Transmitter Characteristics		3-70
ZEROIZE, MSG & MVMT PRESETs, and BULK DATA Transfer Page Flows	F	3-36
Aircraft Status Page		3-39
Aircraft Systems		9-1
Aircraft Torque Factor	F	7-2
Airspeed Correction Charts		7-41
	F	7-37
Airspeed for Onset of Blade Stall	F	5-6
Airspeed Indicator		2-215
Airspeed Limitations Following Failure of the Automatic Stabilator Control System		5-29
Airspeed Operating Limits		5-26
	F	5-5
Airspeed System Description		7-40
Airspeed System Dynamic Characteristics		7-42
Altimeter/Encoder AAU-32A		2-217
Altitude Hold		2-106
Altitude Hold Mode		3-125
Antenna Arrangement	F	3-6

INDEX (Cont)

Subject		Paragraph Figure, Table Number
Anticollision Lights		2-207
ANVIS TEST and DISPLAY SYMBOLOGY Panels	F	4-7
Appendix A, References		1-4
Appendix B, Abbreviations and Terms		1-5
Approach/Go-Around (GA) Mode		3-128
Approved Fuels	T	2-9
APU		2-188
Compartment Fire		9-37
Controls		2-189
Fuel Supply System		2-191
Fuel System		2-190
OIL HOT Caution Message On		9-38
Oil System Servicing		2-240
Operating Limitations		5-49
Source Engine Start		2-58
Armament Loading Data	T	6-2
Armament Loading Data Moments		6-21
Armament Subsystems		4-63
Army Aviation Safety Program		1-7
Asymmetric Fuel Loads		6-18
	F	6-4
Attitude and Airspeed Hold		2-104
Attitude Heading Reference System		3-104
Automatic Approach, Hover, and Depart Failure Matrix	T	2-5
Automatic Approach Profile	F	2-16
Automatic Approach to Hover		2-110
Automatic Depart		2-112
Automatic Departure Profile	F	2-17
Automatic Flight Control System		2-97
Automatic Regression/Progression Modes		3-94
Autopilot		2-103
Autorotative Glide Distance Chart	F	9-3

INDEX (Cont)

Subject		Paragraph Figure, Table Number
AUX ICS Control Panel	F	3-9
Auxiliary AC Power System		2-184
Auxiliary Fuel Quantity Indicator		4-100
Auxiliary Power Unit (APU)	F	2-27
Auxiliary Power Unit (APU) System		2-187
Aviation Life Support Equipment (ALSE)		8-2
Aviator Night Vision Imaging System (ANVIS)		4-38
Avionic Racks		3-16
Avionics General Description		3-1
Avionics Cooling System		2-173
Avionics Systems		3-2
	F	3-1
B		
Backup Attitude Indicator		2-213
	F	2-28
Backup Hydraulic Pump Hot Weather Limitations		5-48
Backup Hydraulic System		2-122
Balance Definitions		6-6
Bank Angle Limitation		5-40
Barometric Altimeter Encoder	F	2-30
Battery		2-177
Battery Charger/Analyzer		2-179
BATTERY FAIL Caution Message On		9-58
BATT LO CHARGE Caution Message On		9-59
Bearing and Range Function Keys		3-169
Before Exterior Check (Figure 8-1)		8-10
Before Landing		8-31
Before Leaving Helicopter		8-35
Before Starting Engines		8-20
Before Takeoff		4-83

INDEX (Cont)

Subject		Paragraph Figure, Table Number
Before Takeoff		8-27
Before Taxi		8-24
BIAS FAIL Advisory light On		9-80
Blackout Curtains		2-164
Blade Deice System		
Control Panel		2-160
Malfunctions		9-91
Operation		2-159
Test		2-161
Test Panel		2-162
Test Panel PWR MAIN RTR and/or TAIL RTR Monitor Light(s) On		9-93
Blade/Pylon Folding/Spreading		8-63
Blade Stall Chart		5-27
Boost Servo Hardover/Power Piston Failure		9-70
BOOST SERVO OFF Caution Message On		9-72
Boost Servos		2-95
Boresighting Target	F	4-24
Building a PLS Frequency List		3-150
Building a VOR and TACAN Frequency List		3-144
Building an ADF Frequency List		3-140
Building or Modifying a Flight Plan		3-118

C

Cabin		
Avionic Racks	F	3-7
Ceiling Tiedown Fittings		5-22
Dimensions		6-22
	F	6-6
Dome Lights		2-201
Doors		6-23
Interior	F	2-5

INDEX (Cont)

Subject		Paragraph Figure, Table Number
Rescue Hoist Control Panel		4-89
Top (Area 3)		8-14
Cable Cut		9-98
Cargo Center of Gravity Planning		6-27
Cargo Hook System		4-72
	F	4-25
Control Switches		4-74
Emergency Release		4-82
		9-96
Light		2-211
Manual Release		4-78
Moments		6-29
	F	6-9
Storage		4-73
Weight Limitation		5-23
Cargo Tiedown Arrangement	F	6-8
CDU		
ASE Pages	F	4-3
Controls	F	3-4
Controls, Indicator, and Functions		3-11
Default Pages		3-45
	F	3-22
Description		3-10
Emissions Page	F	4-1
Operation		3-12
Timer Page and Functions		3-90
	F	3-47
VCR Page		4-6
Zeroize Page	F	3-45
Center of Gravity (CG)		6-12
Center of Gravity Limitations		5-20
Center of Gravity Limits Chart		6-17

INDEX (Cont)

Subject		Paragraph Figure, Table Number
Center of Gravity Limits Chart	F	6-2
CG Limits		6-13
Chaff/Flare		
Controls and Functions		4-4
Dispenser System	F	4-2
Normal Operation		4-10
System		4-3
	F	6-2
Checklist		8-8
Checklist Menu Pages		3-42
Chip Detector/Fuzz Burn-Off System		2-139
Chronometer	F	2-32
Chronometer Operation		2-225
CHIP INPUT LH or RH Caution Message On		9-33
Cipher Control Pages	F	3-30
Climb - 2 Engines, ATF=0.9	F	7-34
Climb/Descent Chart		7-36
	F	7-35
Climb Performance Chart		7-35
Clock		2-225
Cockpit		
Diagram	F	2-4
Doors		2-13
Equipment Checks		8-21
Floodlights and Glare Shield Lighting		2-195
Left Side (Area 2)		8-13
Rescue Hoist Control Panel		4-89
Right Side (Area 8)		8-19
Cold Section Module		2-34
Cold-Weather Operation		8-43
Cold Weather Preflight Check		8-44
Collective Grip	F	2-14

INDEX (Cont)

Subject		Paragraph Figure, Table Number
Collective Pitch Control Stick		2-86
Communication System		3-15
Compartment Diagram		2-5
Computer Sync Loss Advisory Message		9-103
Control Exercise		8-45
Control Mixing		2-88
	T	2-3
Converters		2-176
Coupler Emergencies		9-84
Course Mode		3-122
Crash-Actuated System		2-29
Crash Axe		2-31
Crew Briefing		8-4
Crew Chief/Gunner Seats		2-19
Crew Duties/Responsibilities		8-3
Crew Hover		2-113
Crewmember's/Gunner's Windows		2-15
Crewmember's Hover Grip		4-92
Crewmember's Pendant Control		4-75
Crew Seats		2-16
Crossbleed Engine Start System		2-59
Crosswind/Sideward Flight Operation - High Altitude/Heavy Weight		8-58
Cruise Charts		
Pressure Altitude - 2000 Feet - Clean	F	7-12
Pressure Altitude - 2000 Feet - ETS Installed	F	7-13
Pressure Altitude - 4000 Feet - Clean	F	7-14
Pressure Altitude - 4000 Feet - ETS Installed	F	7-15
Pressure Altitude - 6000 Feet - Clean	F	7-16
Pressure Altitude - 6000 Feet - ETS Installed	F	7-17
Pressure Altitude - 8000 Feet - Clean	F	7-18
Pressure Altitude - 8000 Feet - ETS Installed	F	7-19
Pressure Altitude - 10000 Feet - Clean	F	7-20

INDEX (Cont)

Subject		Paragraph Figure, Table Number
Pressure Altitude - 10000 Feet - ETS Installed	F	7-21
Pressure Altitude - 12000 Feet - Clean	F	7-22
Pressure Altitude - 12000 Feet - ETS Installed	F	7-23
Pressure Altitude - 14000 Feet - Clean	F	7-24
Pressure Altitude - 14000 Feet - ETS Installed	F	7-25
Pressure Altitude - 16000 Feet - Clean	F	7-26
Pressure Altitude - 16000 Feet - ETS Installed	F	7-27
Pressure Altitude - 18000 Feet - Clean	F	7-28
Pressure Altitude - 18000 Feet - ETS Installed	F	7-29
Pressure Altitude - 20000 Feet - Clean	F	7-30
Pressure Altitude - 20000 Feet - ETS Installed	F	7-31
Pressure Altitude - Sea Level - Clean	F	7-10
Pressure Altitude - Sea Level - ETS Installed	F	7-11
Sample Chart	F	7-9
CSC and AUX ICS Controls and Functions		3-20
CSC and AUX ICS Panel		3-18
CSC Control Panel	F	3-8
CSC Modes of Operation		3-19
CSC Normal Operation		3-21
CV Flight Deck Operations		8-61
CW Radar Jammer		4-26
Controls and Functions		4-27
Normal Operation		4-28
CW Radar Warning Receiver		4-17
Controls and Functions		4-18
Normal Operation		4-19
Cyclic and Collective Grips MFD Controls		3-13
Cyclic Grip	F	2-13
Cyclic Stick		2-85
Cyclic-Mounted Stabilator Slew Up Switch		2-117

INDEX (Cont)

Subject		Paragraph Figure, Table Number
D		
Data Bus		3-4
Data Bus Channel Interfaces	T	3-3
Data Transfer Module		3-43
Dashed Line Data		7-6
DC and AC Circuit Breaker Panels		2-180
	F	2-25
DC Monitor Bus		2-178
DC Power Supply System		2-175
DC Power System - General Block Diagram	F	2-24
DD Form 365-3 (Chart C) Weight and Balance Records		6-14
DD Form 365-4 (Form F)		6-16
Declutter Control Pages		3-112
Decreasing NR		9-14
Definition of Emergency Terms		9-3
Description		1-3
Desert and Hot Weather Operation		8-50
Destruction of Army Materiel to Prevent Enemy Use		1-8
Digital Automatic Flight Control System (DAFCS)		2-99
Digital Electronic Control (DEC)		2-44
Dimensions		2-3
Dispenser Assembly		4-5
Display Malfunctions		9-107
Ditching Power Off		9-76
Ditching Power On		9-75
Door Locks		2-168
Doors and Windows		2-12
Doppler Radar		3-106
Downwind Hovering		5-34
DTM Interface	F	4-17

INDEX (Cont)

Subject		Paragraph Figure, Table Number
Dual Engine		
Failure - General		9-12
Failure Low Altitude/Low Airspeed and Cruise		9-13
Fuel Flow		7-39
Torque Limits		7-21
Dual MP Failures		9-104
Duties of Personnel		8-76
Duty Cycle		4-87
E		
Electrical Control Unit		4-67
Electrical Fire In Flight		9-40
Electrical Power Systems		2-174
Electrical System		9-53
Electronic Module Controls		4-8
Electronic Module Assembly (EM)		4-7
Electronic Navigation Pages	F	3-67
Emergencies and/or Equipment Malfunctions - General		9-85
Emergency Equipment (PORTABLE)		9-6
Emergency Exits		9-5
	F	9-1
Emergency Landing In Wooded Areas - Power Off		9-74
Emergency Zeroizing/Erasing the Communication Plan, Flight Plan, and/or NRPs		3-88
Emissions Control		4-2
Emitter Hazards		8-60
Engine		2-33
Alternator		2-43
Bleed Air		7-19
Bleed-Air System		2-50
Chip Detector		2-55

INDEX (Cont)

Subject		Paragraph Figure, Table Number
Compressor Stall		9-19
Control Quadrant		2-62
	F	2-11
Control System		2-61
Emergency Oil System		2-52
ENG 1 and ENG 2 FUEL BYPASS Caution Messages On		9-50
ENG 1 or ENG 2 CHIPS, ENG 1 or ENG 2 OIL PRESS HI/LO, ENG or ENG 2 OIL HOT, or ENG TEMP HI Caution Message On; Engine Oil 2 Temperature High or Engine Oil Pressure High/Low		9-21
ENG 1 or ENG 2 FUEL BYPASS Caution Message On		9-49
ENG 1 or ENG 2 FUEL PRESS LO Caution Messages On		9-52
ENG 1 or ENG 2 OIL BYPASS Caution Message On		9-20
Fire In Flight		9-39
Fuel Prime System		2-78
Fuel Supply System		2-38
Fuel System Components		2-42
Fuel System Selector Control		2-76
Fuselage Fire On Ground		9-36
High Speed Shaft Failure		9-22
Ignition Keylock Switch		2-57
Inlet Anti-Icing Systems		2-157
Inlet Anti-Ice Limitations		5-47
Instrument and Power Train Displays		2-67
Instrument Displays	F	5-2
Instrument Page		3-171
	F	3-77
Instrument, Powertrain, and Fuel and Power Management Pages		3-170
Malfunction - Partial or Complete Power Loss		9-7
Oil Pressure Display		2-69
Oil System		2-51
	F	2-10
Oil System Characteristics		8-47

INDEX (Cont)

Subject	Paragraph Figure, Table Number
Oil System Servicing	2-239
Oil Temperature Display	2-68
Operation	8-46
Overspeed Check Limitations	5-18
Overspeed Protection System	2-65
Power Limitations	5-13
Power Turbine/Rotor Speed Display	2-72
Restart During Flight	9-11
RPM (NP Speed) Limitations	5-14
Runup	8-23
Speed Control System	2-64
Start Envelope	F 5-4
Start Limits	5-17
Start System	2-56
Starter Limits	5-15
T701C	F 2-9
Temperature Display	2-70
Warmup and Control Exercise	8-48
Equipment Loading and Unloading	6-26
Equipment Malfunction Recovery	9-111
Equipment Overtemperature	9-112
Equipment Status Pages	3-37
Equipment Status Summary Pages	3-41
Exceeding Operational Limits	5-3
Explanation of Change Symbols	1-10
Exterior Check	8-11
Exterior Inspection	F 8-1
Exterior Lights	2-203
External AC Power System	2-186
External Load Drag Chart	7-33
	F 7-33
External Source Engine Start	2-60

INDEX (Cont)

Subject		Paragraph Figure, Table Number
External Tank System Configuration		1-11
External Tank System Jettison		9-46
External Tank System Will Not Transfer In Automatic Mode		9-43
External Tank System Will Not Transfer In Manual Mode		9-44
F		
Failure of Probe To Extend		9-47
Failure of Probe To Retract		9-48
Fast Rope Insertion and Extraction System		4-106
	F	4-29
Field of Fire	F	4-23
Fire		9-35
Detection System		2-24
Detector Test System		2-25
Extinguisher Arming Levers (T-Handles)		2-27
Extinguisher Controls		2-28
Extinguishing Systems		2-26
Protection Systems		2-23
Firing Malfunctions		4-70
First Aid Kits		2-32
Flashing Display Data		9-109
Flight Characteristics		9-8
Flight Control Systems		2-84
Main Rotor System Malfunctions		9-77
Servo Low-Pressure Caution Message		2-93
Servo Systems		2-91
Servo Switch		2-92
Flight Data Recorder		2-166
Flight Director		3-110
Altitude Hold Mode		3-125
Approach/Go-Around (GA) Mode		3-128

INDEX (Cont)

Subject	Paragraph Figure, Table Number
Course Mode	3-122
Flight Path Vector Mode	3-133
Groundspeed Mode	3-126
Hover Mode	3-129
Heading Mode	3-124
Modes	3-121
Modes Normal Operations	3-134
NRP Mode	3-130
Terrain Following Mode	3-132
Track Mode	3-123
Update and Store Control Pages	3-155
Vertical Speed Hold Mode	3-127
Waypoint Mode	3-131
Flight in Icing Conditions	5-46
Flight in Instrument Meteorological Conditions (IMC)	5-45
Flight Instrument Lights	2-196
Flight Path Vector Mode	3-133
Flight Plan	3-116
Flight Plan Display	F 3-64
Flight with Cabin Door(s)/Window(s) Open	5-28
Flight with External Loads	8-40
FLIR and Multi-Mode Radar Air-To-Ground Ranging	4-48
FLIR System	
Control Pages	4-44
	F 4-10
Grayscale Test Pattern	F 4-11
Normal Operation	4-45
Operating Modes	4-43
Store	3-165
Page Flow Diagram	F 4-9
Update	3-159
	F 3-73

INDEX (Cont)

Subject		Paragraph Figure, Table Number
Flyover Store		3-168
Flyover Update		3-162
Flying Qualities with ETS Installed		8-41
FM-Homing		3-152
FM-Homing Normal Operation		3-153
FM-Homing Symbology	F	3-71
Formation Lights		2-209
Forms and Records		1-9
Forward Looking Infrared System		4-42
Fouled Cable		9-101
Free Air Temperature		7-10
Free-Air Temperature (FAT) Indicator		2-223
FRIES Weight Limitations		5-25
Fuel		
Automatic Transfer		4-101
Boost Pump		2-39
		2-81
Boost Pump Control Panel	F	2-12
External Tanks		4-97
Filter		2-40
		2-77
Fuel and Lubricants, Specifications, and Capacities	T	2-8
Internal Auxiliary Tanks		4-96
Loading Data	T	6-1
Low Caution Message		2-80
Management Panel		4-99
	F	4-27
Manual Transfer		4-102
Moments		6-18
	F	6-3
Pressure Warning System		2-41
Quantity Display		2-79

INDEX (Cont)

Subject		Paragraph Figure, Table Number
Sampling System		2-237
Supply System		2-74
System Malfunctions		9-42
System Servicing		2-231
Tank Jettison System		2-83
Tanks		2-75
Fuel Transfer System		4-98
Types		2-232
Fuel and Power Management Page		3-173
	F	3-79
Fuselage Left Side (Area 5)		8-16
Fuselage Right Side (Area 7)		8-18

G

Gas Generator Speed (NG) Display		2-71
General Arrangement	F	2-1
General Safety Precautions		8-75
Generator Control Switches		2-185
Generator Control Units		2-182
Global Positioning System		3-99
GND COMM Normal Operation		3-32
Gravity Refueling		2-234
Ground Air Source Requirements		2-238
GND COMM Controls and Functions		3-33
GND COMM Modes of Operation		3-32
Ground Communication Radio	F	3-14
Gound Communication Radio Set (GND COMM)		3-31
Ground Operations		8-57
Ground Resonance		8-38
Ground Taxi		8-25
Ground Taxiing Limitation		5-41

INDEX (Cont)

Subject		Paragraph Figure, Table Number
Groundspeed Mode		3-126
GPS Normal Operation		3-101
Guidance Modes Matrix	F	3-63
Gun Control Unit		4-66
GUN SYSTEM CONTROL Panel		4-65
H		
Hand-Operated Fire Extinguishers		2-30
Handpump Reservoir Servicing		2-241
HAVE QUICK MFD and CDU Control Pages		3-59
HAVE QUICK Normal Operation		3-60
Heading Hold		2-105
Heading Mode		3-124
Heat and Ventilation Controls		2-170
Heating System		2-169
Height Velocity Diagram	F	9-2
Helicopter Compartment and Station Diagram		6-3
	F	6-1
Helicopter Movement		8-62
Helicopter Startup		8-65
HF Radio Set		3-64
Control Pages	F	3-31
Frequency List Pages	F	3-32
MFD and CDU Control Pages		3-66
Modes of Operations		3-65
Normal Operation		3-67
High Speed Yaw Maneuver Limitation		5-36
History Counter		2-47
Hoist Cable Shear System		4-94
Hoist Failures		9-97
Hoist Searchlight		2-205

INDEX (Cont)

Subject		Paragraph Figure, Table Number
Horizontal Reference Datum		6-7
Hot Fuel Limitations		5-19
Hot Section Module		2-35
Hot Start Prevention (HSP)		2-45
Hover	F	7-5
Hover Augmentation/Gust Alleviation		2-107
Hover Charts		7-22
Hover Check		8-26
Hover Coupler		2-111
Hover Infrared Suppressor Subsystem (HIRSS)		2-66
Hover Mode		3-129
Hover Trim Control Panel		4-91
HSD, VSD, and HVR Primary Pages		3-44
	F	3-21
Hydraulic System		2-118
		9-60
HYD FAIL Warning Message On		9-61
HYDR RSVR 2 LO Caution Message On		9-69
Leak Detection/Isolation System		2-123
Logic Module Operation Principle	F	2-18
Pump Modules		2-119
Systems Servicing		2-242

I

IASS Controlled Communications		3-35
IASS Equipment Power On and Test Checks		3-36
IASS Weight and Balance Implementation Chart	F	3-61
IBU Controls and Functions		4-33
IBU Operation		4-34
Ice and Rain Operation		8-55
Ice Rate Meter Fail or Inaccurate		9-94

INDEX (Cont)

Subject		Paragraph Figure, Table Number
Idle Fuel Flow		7-37
	T	7-2
IFF Transponder		3-174
Transponder and/or Radar Beacon Normal Operation		3-178
Transponder Computer		3-175
	F	3-81
Transponder Receiver/Transmitter	F	3-80
Ignition System		2-46
Immediate Action Emergency Steps		9-2
In Flight		8-52
In-Flight Icing		8-56
Inertial Navigation Unit and Terrain Reference Navigation		3-102
Increasing NR		9-15
Infrared Countermeasure Set		4-23
Infrared Suppressor System		7-20
Input Module		2-133
Instrument Approach	F	8-3
Instrument Flight		8-36
Instrument Marking Color Codes		5-6
Instrument Markings		5-5
	F	5-1
Instrument Panel		2-11
	F	2-8
Integrated Avionics Equipment	T	3-1
Intercommunication System	T	3-5
Interference Blanker Unit		4-32
Interference Blanker Unit Interface Signals	T	4-1
Interim Ground Operating Envelope	F	5-8
Interior Cabin (Area 4)		8-15
Interior Lighting		2-193
Intermediate and Tail Gear Box Chip/Temperature Systems		2-144
Intermediate Gear Box		2-142

INDEX (Cont)

Subject		Paragraph Figure, Table Number
Internal Auxiliary Tank System Will Not Transfer In Manual Mode		9-45
INU and TRN Normal Operation		3-103
IR Jammer Controls and Functions		4-24
IR Jammer Normal Operation		4-25
J		
Jammed Hoist Cable		9-99
Jettison Limitations		5-30
K		
KY-58 MFD and CDU Control		3-62
KY-58 Normal Operations		3-63
KYK-13 Fill Port		3-100
L		
Landing		8-32
Landing and Ditching		9-73
Landing Considerations		8-70
Landing Gear Limitations		5-42
Landing Gear System		2-7
Landing Light		2-206
Landing Speed Limitations		5-43
Laser Warning Receiver		4-14
Controls and Functions		4-15
Normal Operation		4-16
Launch and Recovery Procedures		8-67
Launch Sequence and Deck Status Lights	T	8-1
Lighted Switches Dimmer		2-197

INDEX (Cont)

Subject		Paragraph Figure, Table Number
Lightning Strike		9-23
Limitations for Maneuvering With FRIES Loads		5-39
Limitations for Maneuvering With Sling Loads		5-37
Limitations for Maneuvering With Rescue Hoist Loads		5-38
Liquid Crystal Chronometer		2-224
Load Demand System		2-63
Logic Modules		2-128
Loss of No.1 or No.2 Generator During Blade Deice Operation		9-95
Loss of Tail Rotor Thrust		9-25
Loss of Tail Rotor Thrust at Low Airspeed/Hover		9-26
Low-Frequency Automatic Direction Finder Receiver		3-138
Lower Console	F	2-7
M		
Magnetic Heading Indicator (MHI)		2-216
	F	2-29
Main Landing Gear		2-8
Main Module		2-135
Main Rotor Blade and BIM System	F	2-19
Main Rotor Blades		2-147
Main Rotor Gust Lock		2-148
Main Rotor System		2-146
Main Rotor Tiedown		2-249
Main Tanks		2-75
Maintenance Light		2-202
Main Transmission Lubrication System		2-136
Main Transmission Module Limitations		5-12
Main Transmission Oil System Servicing		2-243
MAIN XMSN CHIP, LH or RH AGB CHIP, TAIL XMSN CHIP/TEMP, or INTMD XMSN CHIP/TEMP Caution Message On		9-34
Maneuvering Flight		8-39

INDEX (Cont)

Subject		Paragraph Figure, Table Number
Maneuvering Limitations		5-35
Maneuvering Stability		2-109
Manual Operation of the Stabilator		5-33
Map Display Generator		4-54
Control Page		4-55
	F	4-19
Normal Operation		4-57
Page Flow Diagram	F	4-18
Store		3-167
Update		3-161
	F	3-75
Mask Blower Units		4-104
	F	4-28
Master Warning Panel		2-226
	F	2-33
Master Warning Panel Bright/Dim Test Switch		2-198
Max Cargo Size Diagram for Loading Through Cabin Doors		6-24
Maximum Continuous Torque Available		7-18
Maximum Gross Weight to Hover IGE		7-24
	F	7-7
Maximum Gross Weight to Hover OGE		7-23
	F	7-6
Maximum Package Size/Cargo Doors	F	6-7
Maximum Package Size Table for Cargo Doors	T	6-3
Maximum Performance		8-29
Maximum Torque Available	F	7-4
MFD		
ADF Control Pages		3-139
ADF Frequency List Pages		3-140
ADF Frequency List Pages	F	3-68
Aircraft Status Page	F	3-17
ANVIS Display System Symbology	F	3-56

INDEX (Cont)

Subject	Paragraph Figure, Table Number
Checklist Menu and Menu Control Pages	F 3-20
Cipher Control Pages	F 3-30
Color Codes	5-7
Controls, Indicators, and Functions	3-8
Control Layers	3-14
	F 3-5
Declutter Control Pages	3-112
	F 3-57
Description	3-7
Display Area	F 3-3
E2 Symbology Page	F 4-14
Electronic Navigation Control Pages	3-137
	F 3-67
Equipment Status Pages	F 3-15
Equipment Status Summary Pages	F 3-19
Flight Plan Pages	3-117
Flight Plan Leg Pages	F 3-60
Flight Plan Summary Pages	F 3-59
FLIR Control Pages	4-44
	F 4-10
Havequick Control Pages	3-59
Horizontal Situation Display Symbology	F 3-54
Hover Display Symbology	F 3-55
HSD and VSD Primary Pages	F 3-21
IFF and Radar Beacon Transponder Control Pages	3-177
	F 3-82
Map Control Pages	4-55
	F 4-19
MDG Look Ahead Page	4-56
	F 4-20
NRP Table Control Pages	3-114
	F 3-58

INDEX (Cont)

Subject		Paragraph Figure, Table Number
Operation		3-9
PLS Control Pages		3-149
PLS Frequency List Pages		3-150
PLS Frequency List Pages	F	3-70
Position Systems Control Pages		3-95
Radar Control Pages		4-50
	F	4-13
Radio NAVAIDS Control Pages		3-136
	F	3-66
SINCGARS Fill Control Page	F	3-24
SINCGARS Frequency List Pages	F	3-25
SINCGARS Function and Control Pages		3-48
	F	3-23
Store Control Pages		3-166
	F	3-76
System Control Pages		3-96
	F	3-50
System Control Pages Flow Diagram	F	3-49
Tactical Navigation Control Pages		3-120
	F	3-62
UHF Control Pages		3-56
	F	3-28
UHF Frequency List Pages	F	3-29
Update Control Pages		3-157
	F	3-72
VCR Controls and Functions		4-36
VCR Normal Operation		4-37
Vertical Situation Display Symbology	F	3-53
VHF Control Pages		3-52
	F	3-26
VHF Frequency List Pages	F	3-27
VOR/TACAN Control Pages		3-143

INDEX (Cont)

Subject		Paragraph Figure, Table Number
VOR/TACAN Frequency List Pages		3-144
	F	3-69
VSD and HSD Declutter Pages	F	3-57
VSD, HSD, ADS, and Hover Symbology Display Pages		3-111
WCA Pages		3-40
	F	3-18
M134 Minigun Ammunition		4-71
M134 Minigun Machinegun Operation		4-69
M134 Minigun Machineguns		4-64
	F	4-22
MFD PL, MFD PR, MFD CPL, or MFD CPR Fail Advisory Message or Blank MFD Display		9-108
MH-60K		2-2
Minimum Crew Requirements		5-4
Miscellaneous Switch Panel		2-163
	F	2-22
Missile Warning Receiver		4-20
Controls and Functions		4-21
Normal Operation		4-22
Mission Management Subsystem (MMS)		3-3
Mission Planning		8-1
Mission Processors		3-6
Mission System Malfunctions		9-102
Mixing Unit		2-87
MN XMSN PRESS LO/MN XMSN PRESS HI/MN XMSN OIL HOT Caution Message On; or Main Transmission Pressure Low/High or Main Transmission Oil Pressure High		9-32
Moment		6-9
Mooring		2-247
	F	2-36
Mooring Instructions		2-248
MR DEICE FAULT, MR DEICE FAIL, or TR DEICE FAIL Caution Message On		9-92
Multi-Function Display Controls	F	3-2

INDEX (Cont)

Subject		Paragraph Figure, Table Number
Multi-Mode Radar		4-49
Control Page		4-50
	F	4-13
Normal Operation		4-51
Normal Operating Modes	T	4-2
Radiation Danger Zone	F	4-16
Store		3-166
System Page Flow Diagram	F	4-12
Update		3-160
	F	3-74
N		
Navigation Display Pages		3-97
	F	3-51
Navigation Hierarchy	F	3-48
Navigation Initialization Pages		3-98
	F	3-52
Navigation Reference Points		3-113
Net Selection	T	3-7
Net Type, Quantity, and Range	T	3-8
Night Vision Goggles (NVG) Lighting System		2-194
No.1 and No.2 Generators Fail (All MFDs will be blank)		9-54
No.1 Hydraulic System		2-120
No.1 Transfer Module		2-125
No.2 Hydraulic System		2-121
No.2 Transfer Module		2-126
Non-Integrated Avionics Equipment	T	3-2
Non-IASS Controlled Communications		3-17
Nose Section (Area 1)		8-12
NP/NR Increasing/Decreasing (Oscillation)		9-16
NRP Course Guidance	F	3-65

INDEX (Cont)

Subject		Paragraph Figure, Table Number
NRP Mode		3-130
NRP Table Entry and Modifications		3-115
NVG Operations		8-72
O		
Oil Cooler and Filter		2-54
Oil Tank		2-53
Operating Procedures and Maneuvers		8-6
Optimum Altitude for Maximum Range	F	7-32
Optimum Range		7-31
Optimum Range Charts		7-32
P		
Parking		2-245
Parking and Shutdown		8-34
Passenger Briefing		8-5
Payload Module Assembly		4-6
Pedal Bind/Restriction or Drive With No Accompanying Caution Message		9-30
Performance Data Basis		7-11
Personnel Locator System (PLS)		3-148
Personnel Moments		6-20
	F	6-5
Pilot-Assist Servos		2-94
Pilot's and Copilot's Seating		2-17
Pitch Bias Actuator (PBA)		2-100
Pitch Boost Servo Hardover		9-71
Collective, Pitch, Roll, or Yaw/Trim Hardover		9-87
Pitot Heater		2-156
Pitot-Static System		2-212
PLS Normal Operation		3-151

INDEX (Cont)

Subject		Paragraph Figure, Table Number
Pneumatic Source Inlet Limits		5-16
Pneumatic Subsystem		2-131
Position Lights		2-208
Positioning Systems		3-93
Position Systems Normal Operation		3-109
Powertrain		2-132
Powertrain Page		3-172
	F	3-78
Powertrain Chip, Temperature, and Pressure Display	F	5-3
Power Turbine Section Module		2-36
Preflight Check		8-9
Pressure Refueling		2-235
Pressure Refueling Aboard Ship with the Rotors Engaged		8-74
Principal Dimensions	F	2-2
PRI SERVO #1 or #2 PRESS LO Caution Message On		9-66
Prohibited Maneuvers		5-31
Protective Armor		2-18
Protective Covers and Plugs		2-246
Pulse Radar Jammer		4-29
Pulse Radar Jammer Controls and Functions		4-30
Pulse Radar Jammer Normal Operation		4-31

R

Radar Altimeter		2-218
	F	2-31
Antennas		2-219
Beacon Transponder		3-176
Controls and Functions		2-220
Operation		2-221
Warning Indicator	F	4-4
Warning Indicator Test Symbols	F	4-5

INDEX (Cont)

Subject		Paragraph Figure, Table Number
Warning Receiver		4-11
Warning Receiver Controls and Functions		4-12
Warning Receiver Normal Operation		4-13
Radio NAVAIDS Normal Operation		3-154
Radio NAVAIDS Systems		3-135
Rappelling Rope Connectors		4-105
Recovery Signals		8-73
Refueling/Defueling		2-82
Refueling Probe Light		2-210
Refueling Probe Operation		4-103
Remote Terminal and Avionics Interface Units		3-5
Rescue Hoist System		4-87
	F	4-26
Control Panels		4-89
Duty Cycle Limitations		5-52
	T	5-1
Moments		6-30
	F	6-10
	T	6-4
Operational Check		4-95
Priority Valve		2-130
Weight Limitations		5-24
Reservoir Fill System		2-129
Restraint Criteria		6-31
Restricted Maneuvers		5-32
Rotor Blade Deice System		2-158
	F	2-21
ROTOR BRAKE ON Caution Message On - In Flight		9-27
Rotor Brake System		2-149
Master Cylinder		2-150
Operating Limits		5-9
System Diagram	F	2-20

INDEX (Cont)

Subject		Paragraph Figure, Table Number
Rotors, Transmissions, and Drive Systems		9-24
Rotor System		2-145
Engagement		8-66
Limitations		5-8
Speed Limitations		5-11
Start and Stop Limits		5-10
RTU Interfaces	T	3-4
RTU1 FAIL and RTU2 FAIL Caution Messages		9-106
RTU1 FAIL or RTU2 FAIL Caution Message		9-105
Runaway Hoist		9-100
S		
SATCOM Control Panel	F	3-10
Controls and Functions		3-24
Display Representations	F	3-13
KY-58		3-27
KY-58 Control and Functions		3-28
KY-58 Control Panel	F	3-12
KY-58 Normal Operation		3-29
Modes of Operation		3-23
Normal Operation		3-30
Power Amplifier		3-25
Power Amplifier Control Panel	F	3-11
Power Amplifier Controls and Functions		3-26
SAS FAIL Caution Message On		9-82
SAS Failure with no FAIL ADVISORY light or caution message		9-83
Searchlight		2-204
Servicing		2-229
Diagram	F	2-34
Platforms and Fairings		2-230
	F	2-35

INDEX (Cont)

Subject	Paragraph Figure, Table Number
Shipboard Tiedown Procedure	2-250
Shipboard Wind Limits	8-64
SINCGARS Radio Set	3-46
SINCGARS Mode of Operation	3-47
SINCGARS Normal Operation	3-49
Single/Dual Engine Fuel Flow	F 7-36
Single Engine	7-30
Failure - General	9-9
Failure Low Altitude/Low Airspeed and Cruise	9-10
Fuel Flow	7-38
Service Ceiling	7-44
	F 7-39
Sling/Hoist Load Maneuvering Limitations	F 5-7
Slope Landing Limitations	5-44
Smoke and Fume Elimination	9-41
Stabilator System	2-114
Control Panel	2-115
Malfunction - Auto Mode Failure	9-89
Position Indicator	2-116
Stability Augmentation System (SAS)	2-101
Standby Magnetic Compass	2-222
Starting Engines	8-22
Storing Coordinates	3-163
Stormscope Controls, Functions, and Displays	4-61
Stormscope Displays	F 4-21
Stormscope Error Messages	T 4-3
Stormscope Normal Operation	4-62
Stormscope Weather Mapping System	4-60
Symbols Definition	8-7

INDEX (Cont)

Subject		Paragraph Figure, Table Number
T		
TACAN and VORTAC Normal Operation		3-147
TACAN/VORTAC Update		3-158
Tactical Air Navigation Transmitter/Receiver		3-146
Tactical/Non-NAVAID Navigation		3-119
Tail and Intermediate Gear Box Servicing		2-244
Tail Drive System		2-141
Tail Gear Box		2-143
Tail Landing Gear		2-10
Tail Pylon (Area 6)		8-17
Tail Rotor System		2-151
Rotor Control		2-89
Rotor Pedals		2-90
Rotor Quadrant		2-152
Takeoff		8-28
	F	7-8
Taxiing		8-49
Taxiing and Ground Operation		8-51
Temperature Conversion Chart	F	7-1
Terrain Following Mode		3-132
Thermocouple Harness		2-48
Thunderstorm Operation		8-53
Tiedown Fittings and Restraint Rings		6-25
Timer Normal Operation		3-91
Torque and Overspeed Sensors		2-49
Torque Available		7-15
Torque Available - 10 Minutes		7-16
Torque Available - 30 Minutes		7-17
Torque Conversion Chart	F	7-3
Torque Display		2-73
Torque Factor Method		7-12

INDEX (Cont)

Subject		Paragraph Figure, Table Number
Torque Factor Procedure		7-14
Torque Factor Terms		7-13
TQ Split Between Engines No.1 and No.2 (Advisory Message - Torque Split)		9-18
Track Handle		4-39
Track Handle Controls and Functions		4-40
Track Handle Controls and Functions	F	4-8
Track Handle Operating Modes		4-41
Track Mode		3-123
Transfer Modules		2-124
Transmission		
Chip Detector System		2-140
Oil Pressure Display		2-138
Oil Temperature Display		2-137
Transponder Computer		3-175
Trim System		2-102
Actuator Jammed		9-88
Servos		2-96
Troop/Cargo (Cabin) Doors		2-14
Troop Commander Seat		2-22
Troop Provisions		2-20
Troop Seat Belt Operation		2-21
Troop Seats (Typical Arrangement)	F	2-23
Troop/Troop Commander Seats		2-167
TR #1 SERVO/BKUP FAIL Caution Message On		9-31
TR QDRNT FAIL Caution Message On With Loss of TR Control		9-29
TR QDRNT FAIL Caution Message On With No Loss of TR Control		9-28
Turbulence		8-54
Turbulence and Thunderstorm Operation		5-51
Turn Coordination		2-108
Turning Radius and Clearance	F	2-3
Turning Radius and Ground Clearance		2-4
Turn Rate Indicating System		2-214

INDEX (Cont)

Subject		Paragraph Figure, Table Number
Typical Ride Profiles	F	4-15

U

UHF-AM Radio		3-54
Modes of Operation		3-55
Normal Operation		3-57
Radio HAVE QUICK Operation		3-58
SATCOM Radio System		3-22
Uncommanded Nose Down/Up Pitch Attitude Change		9-90
Updating Positioning System Data		3-156
Upper and Lower Consoles		2-6
Upper and Lower Console Lights		2-199
Upper Console	F	2-6
Use of Fuels		2-233
Use of Words Shall, Should, and May		1-12
Utility Lights		2-200
Utility Module		2-127

V

VCR Controls and Functions		4-36
VCR Normal Operation		4-37
Ventilation System		2-172
Vertical Speed Hold Mode		3-127
VHF Modes of Operation		3-51
VHF Normal Operation		3-53
VHF Radio Set		3-50
Video Cassette Recorder		4-35
Video Systems Modes	T	3-6
Visual Approach Profile	F	8-2

INDEX (Cont)

Subject		Paragraph Figure, Table Number
Voice Security Equipment TSEC/KY-58 (Integrated)		3-61
Voice Warning System Messages	T	2-6
Voice Warning System (VWS)		2-227
VOR/ILS/MB Navigation Radio Receiving Set		3-142
VOR/ILS/MB Normal Operation		3-145
HSD, VSD, HVR, and ADS Symbology Pages		3-111
W		
Warning and Caution Priority List	T	9-2
Warning, Caution, Advisory, and Annunciator System		2-228
Warnings, Cautions, and Notes		1-2
Waveoff Procedures		8-69
Waypoint Mode		3-131
WCA Pages		3-40
WCA and Annunciator Messages	T	2-7
Weight Definitions		6-5
Weight Limitations		5-21
Weight-On-Wheels (Hardwired)	T	2-1
Weight-On-Wheels (IASS Override)	T	2-2
Wheel Brake System		2-9
Windshield Anti-ice/Defogging System		2-155
Windshield Anti-ice Limitations		5-50
Windshield Wipers		2-153
Windshield Wiper Control		2-154
Wire Strike Protection System		2-165
Z		
ZEROIZE/EMERGENCY Panel	F	3-46
Zeroize/Erase Normal Operation		3-89

By Order of the Secretary of the Army:

GORDON R. SULLIVAN
General, United States Army
Chief of Staff

Official:

Milton H. Hamilton

MILTON H. HAMILTON
Administrative Assistant to the Secretary of the Army

06842

DISTRIBUTION:
To be distributed in accordance with Special Distribution requirements for TM 1-1520-250-10.

*U.S. GOVERNMENT PRINTING OFFICE: 1994-555-121/80075

RECOMMENDED CHANGES TO EQUIPMENT TECHNICAL PUBLICATIONS

THEN...JOT DOWN THE DOPE ABOUT IT ON THIS FORM. CAREFULLY TEAR IT OUT. FOLD IT AND DROP IT IN THE MAIL.'

SOMETHING WRONG WITH THIS PUBLICATION?

FROM: (PRINT YOUR UNIT'S COMPLETE ADDRESS)
PFC John DOE
CO A 3rd Engineer Bn
Ft. Leonardwood, MO 63108

DATE SENT: 22 August 1992

PUBLICATION NUMBER	PUBLICATION DATE	PUBLICATION TITLE
TM 1-1520-250-10	15 June 1992	Operator's Manual MH60K Helicopter

BE EXACT...PIN-POINT WHERE IT IS

PAGE NO	PARA-GRAPH	FIGURE NO	TABLE NO
6	2-1 a		
B1		4-3	

IN THIS SPACE TELL WHAT IS WRONG AND WHAT SHOULD BE DONE ABOUT IT:

In line 6 of paragraph 2-1a the manual states the engine has 6 cylinders. The engine on my set only has 4 cylinders. Change the manual to show 4 cylinders.

Callout 16 on figure 4-3 is pointed at a bolt. In key to figure 4-3, item 16 is called a shim - Please correct one or the other

EXAMPLE

PRINTED NAME. GRADE OR TITLE. AND TELEPHONE NUMBER
JOHN DOE, PFC (268) 317-7111

SIGN HERE
JOHN DOE John Doe

DA FORM 1 JUL 79 2028-2

PREVIOUS EDITIONS ARE OBSOLETE

DRSTS-M Overprint 1, 1 Nov 80

P.S.--IF YOUR OUTFIT WANTS TO KNOW ABOUT YOUR RECOMMENDATION MAKE A CARBON COPY OF THIS AND GIVE IT TO YOUR HEADQUARTERS

AK2534
SA

TEAR ALONG PERFORATED LINE

REVERSE OF DA FORM 2028-2 Reverse of DRSTS-M Overprint 2, 1 Nov 80

TEAR ALONG PERFORATED LINE

FILL IN YOUR UNITS ADDRESS

FOLD BACK

DEPARTMENT OF THE ARMY

_____

_____

OFFICIAL BUSINESS

COMMANDER
U.S. ARMY AVIATION AND TROOP COMMAND
ATTN: AMSAT-I-MP
4300 GOODFELLOW BOULEVARD
ST. LOUIS, MO 63120-1798

RECOMMENDED CHANGES TO EQUIPMENT TECHNICAL PUBLICATIONS

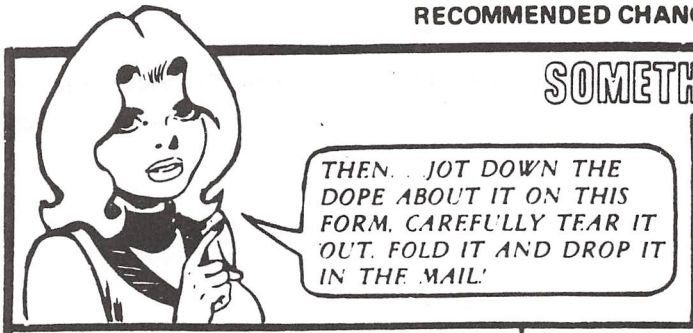

SOMETHING WRONG WITH THIS PUBLICATION?

FROM: (PRINT YOUR UNIT'S COMPLETE ADDRESS)

DATE SENT

PUBLICATION NUMBER	PUBLICATION DATE	PUBLICATION TITLE
TM 1-1520-250-10	1 June 1994	OPERATOR'S MANUAL FOR MH-60K HELICOPTER

BE EXACT. PIN-POINT WHERE IT IS

PAGE NO	PARA-GRAPH	FIGURE NO	TABLE NO

IN THIS SPACE TELL WHAT IS WRONG AND WHAT SHOULD BE DONE ABOUT IT:

PRINTED NAME GRADE OR TITLE AND TELEPHONE NUMBER

SIGN HERE

DA FORM 1 JUL 79 2028-2

PREVIOUS EDITIONS ARE OBSOLETE

P.S. IF YOUR OUTFIT WANTS TO KNOW ABOUT YOUR RECOMMENDATION MAKE A CARBON COPY OF THIS AND GIVE IT TO YOUR HEADQUARTERS

REVERSE OF DA FORM 2028-2 Reverse of DRSTS-M Overprint 2, 1 Nov 80

TEAR ALONG PERFORATED LINE

FILL IN YOUR UNITS ADDRESS

FOLD BACK

DEPARTMENT OF THE ARMY

OFFICIAL BUSINESS

COMMANDER
U.S. ARMY AVIATION AND TROOP COMMAND
ATTN: AMSAT-I-MP
4300 GOODFELLOW BOULEVARD
ST. LOUIS, MO 63120-1798

RECOMMENDED CHANGES TO EQUIPMENT TECHNICAL PUBLICATIONS

SOMETHING WRONG WITH THIS PUBLICATION?

FROM: (PRINT YOUR UNIT'S COMPLETE ADDRESS)

DATE SENT

PUBLICATION NUMBER	PUBLICATION DATE	PUBLICATION TITLE
TM 1-1520-250-10	1 JUNE 1994	OPERATOR'S MANUAL FOR MH-60K HELICOPTER

BE EXACT. PIN-POINT WHERE IT IS

PAGE NO	PARA-GRAPH	FIGURE NO	TABLE NO

IN THIS SPACE TELL WHAT IS WRONG AND WHAT SHOULD BE DONE ABOUT IT:

PRINTED NAME GRADE OR TITLE AND TELEPHONE NUMBER

SIGN HERE

DA FORM 1 JUL 79 2028-2

PREVIOUS EDITIONS ARE OBSOLETE

P.S. IF YOUR OUTFIT WANTS TO KNOW ABOUT YOUR RECOMMENDATION MAKE A CARBON COPY OF THIS AND GIVE IT TO YOUR HEADQUARTERS

REVERSE OF DA FORM 2028-2 Reverse of DRSTS-M Overprint 2, 1 Nov 80

TEAR ALONG PERFORATED LINE

FILL IN YOUR UNITS ADDRESS

FOLD BACK

DEPARTMENT OF THE ARMY

OFFICIAL BUSINESS

COMMANDER
U.S. ARMY AVIATION AND TROOP COMMAND
ATTN: AMSAT-I-MP
4300 GOODFELLOW BOULEVARD
ST. LOUIS, MO 63120-1798

RECOMMENDED CHANGES TO EQUIPMENT TECHNICAL PUBLICATIONS

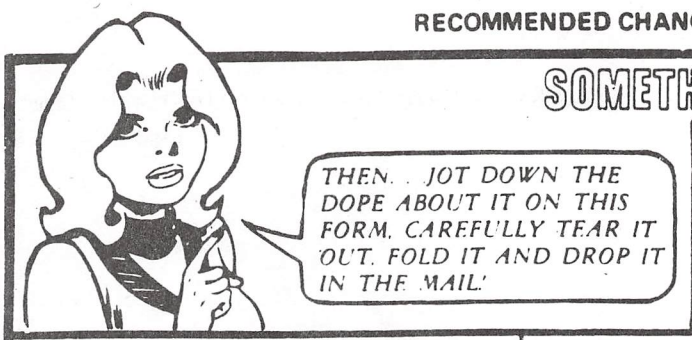

SOMETHING WRONG WITH THIS PUBLICATION?

FROM: (PRINT YOUR UNIT'S COMPLETE ADDRESS)

DATE SENT

PUBLICATION NUMBER	PUBLICATION DATE	PUBLICATION TITLE
TM 1-1520-250-10	1 June 1994	OPERATOR'S MANUAL FOR MH-60K HELICOPTER

BE EXACT. PIN-POINT WHERE IT IS

PAGE NO	PARAGRAPH	FIGURE NO	TABLE NO

IN THIS SPACE TELL WHAT IS WRONG AND WHAT SHOULD BE DONE ABOUT IT:

PRINTED NAME, GRADE OR TITLE, AND TELEPHONE NUMBER

SIGN HERE

DA FORM 1 JUL 79 2028-2

PREVIOUS EDITIONS ARE OBSOLETE

P.S.—IF YOUR OUTFIT WANTS TO KNOW ABOUT YOUR RECOMMENDATION MAKE A CARBON COPY OF THIS AND GIVE IT TO YOUR HEADQUARTERS

REVERSE OF DA FORM 2028-2 Reverse of DRSTS-M Overprint 2,
1 Nov 80

TEAR ALONG PERFORATED LINE

FILL IN YOUR
UNITS ADDRESS

FOLD BACK

DEPARTMENT OF THE ARMY

OFFICIAL BUSINESS

COMMANDER
U.S. ARMY AVIATION AND TROOP COMMAND
ATTN: AMSAT-I-MP
4300 GOODFELLOW BOULEVARD
ST. LOUIS, MO 63120-1798

The Metric System and Equivalents

Linear Measure

1 centimeter = 10 millimeters = .39 inch
1 decimeter = 10 centimeters = 3.94 inches
1 meter = 10 decimeters = 39.37 inches
1 dekameter = 10 meters = 32.8 feet
1 hectometer = 10 dekameters = 328.08 feet
1 kilometer = 10 hectometers = 3,280.8 feet

Weights

1 centigram = 10 milligrams = .15 grain
1 decigram = 10 centigrams = 1.54 grains
1 gram = 10 decigram = .035 ounce
1 dekagram = 10 grams = .35 ounce
1 hectogram = 10 dekagrams = 3.52 ounces
1 kilogram = 10 hectograms = 2.2 pounds
1 quintal = 100 kilograms = 220.46 pounds
1 metric ton = 10 quintals = 1.1 short tons

Liquid Measure

1 centiliter = 10 milliliters = .34 fl. ounce
1 deciliter = 10 centiliters = 3.38 fl. ounces
1 liter = 10 deciliters = 33.81 fl. ounces
1 dekaliter = 10 liters = 2.64 gallons
1 hectoliter = 10 dekaliters = 26.42 gallons
1 kiloliter = 10 hectoliters = 264.18 gallons

Square Measure

1 sq. centimeter = 100 sq. millimeters = .155 sq. inch
1 sq. decimeter = 100 sq. centimeters = 15.5 sq. inches
1 sq. meter (centare) = 100 sq. decimeters = 10.76 sq. feet
1 sq. dekameter (are) = 100 sq. meters = 1,076.4 sq. feet
1 sq. hectometer (hectare) = 100 sq. dekameters = 2.47 acres
1 sq. kilometer = 100 sq. hectometers = .386 sq. mile

Cubic Measure

1 cu. centimeter = 1000 cu. millimeters = .06 cu. inch
1 cu. decimeter = 1000 cu. centimeters = 61.02 cu. inches
1 cu. meter = 1000 cu. decimeters = 35.31 cu. feet

Approximate Conversion Factors

To change	*To*	*Multiply by*	*To change*	*To*	*Multiply by*
inches	centimeters	2.540	ounce-inches	newton-meters	.007062
feet	meters	.305	centimeters	inches	.394
yards	meters	.914	meters	feet	3.280
miles	kilometers	1.609	meters	yards	1.094
square inches	square centimeters	6.451	kilometers	miles	.621
square feet	square meters	.093	square centimeters	square inches	.155
square yards	square meters	.836	square meters	square feet	10.764
square miles	square kilometers	2.590	square meters	square yards	1.196
acres	square hectometers	.405	square kilometers	square miles	.386
cubic feet	cubic meters	.028	square hectometers	acres	2.471
cubic yards	cubic meters	.765	cubic meters	cubic feet	35.315
fluid ounces	milliliters	29,573	cubic meters	cubic yards	1.308
pints	liters	.473	milliliters	fluid ounces	.034
quarts	liters	.946	liters	pints	2.113
gallons	liters	3.785	liters	quarts	1.057
ounces	grams	28.349	liters	gallons	.264
pounds	kilograms	.454	grams	ounces	.035
short tons	metric tons	.907	kilograms	pounds	2.205
pound-feet	newton-meters	1.356	metric tons	short tons	1.102
pound-inches	newton-meters	.11296			

Temperature (Exact)

°F	Fahrenheit temperature	5/9 (after subtracting 32)	Celsius temperature	°C